RBM

CATALOGUE 2025

RBM SpA
Subject to management and coordination pursuant to Article 2497-bis of the Italian Civil Code by GLBS S.r.l. a socio unico | VAT No. 00551250988

Tel. +39 030 2537211 ric. aut.
info@rbm.eu
www.rbm.eu
SHARE CAPITAL: 17.000.000€

REGISTERED OFFICE
Via Industriale, 23
25060 S.Giovanni di Polaveno
(Brescia) Italy

HEAD OFFICE
Via S. Giuseppe, 1
25075 Nave
(Brescia) Italy

CATALOGUE 2025

The future of efficiency and climate wellbeing is here, even when it's not visible

RBM

COMPANY
VISION
TIME
DESIGN

RBM **designs and manufactures** highly innovative components, hydro-thermo-sanitary systems and climate wellness solutions, distinguished by their highly efficient performance and recognised effectiveness.

WHO WE ARE?

Founded in 1953 by the Bossini family in Lumezzane, RBM has become a leading company in the plumbing and heating industry, operating worldwide.

The Group is continuously growing and now has:

- **5 manufacturing plants** in Italy
- **2 European branch offices** (France and Belgium)
- **3 sales subsidiaries** in the World (Netherlands, Australia and China)
- **1 representative office** in Romania
- **more than 300** employees and total collaborators
- **Experiential Showrooms** in Europe: Brescia, Milan, Roma, Cortina [Italy], Genk [Belgium], Aix-en-Provence [France] ...

RBM maintains the **maximum quality control of its products** via the constant development of internal skills and a vertical integration of its production activities.

WATCH
our corporate video

OUR HISTORY

1953

RBM is founded
in Lumezzane
by the Bossini family.

1999

The **RBM KILMA** division is born.

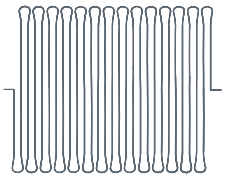

2004

The **RBM METIS** division is born.

1983

RBM expands and moves
to S. Giovanni di Polaveno.

2000

Acquisition of **Sipla spa**
(now Sipla Stamping ltd.),
a company involved in the
molding of plastics for third
parties in the following sectors:
electrical, plumbing, and
mechanical, medical, gas
and automotive.

2006

The following is set
up the plant for
the production of
**insulating panels for
radiant systems**.

2007

The department for the **production of insulating panels** for radiant systems is set up

2010

The brand name is taken over GS Gnutti Sebastiano. **RBM SFERIKA** is born, which deals with the production and marketing of ball valves.

2018

The line for the production of **HIUs** (Heat Interface Unit), **substations of heat** used in **district heating**.

2019

RBM IBOX is created and **R&D Lab,** with ample space designated for reception, showroom and laboratory.

2021

The showroom is inaugurated **in Milan in the Brera area**.

The new division **MORE – the Wellbeing**, to offer integrated systems that adapt to the habits, the needs and requirements of people, improving their quality of life: everything is connected, controllable and integrated, minimizing the time it takes to adapt of environmental conditions to new needs or changed external conditions.

2024

Publication of the **first sustainability report of RBM**.

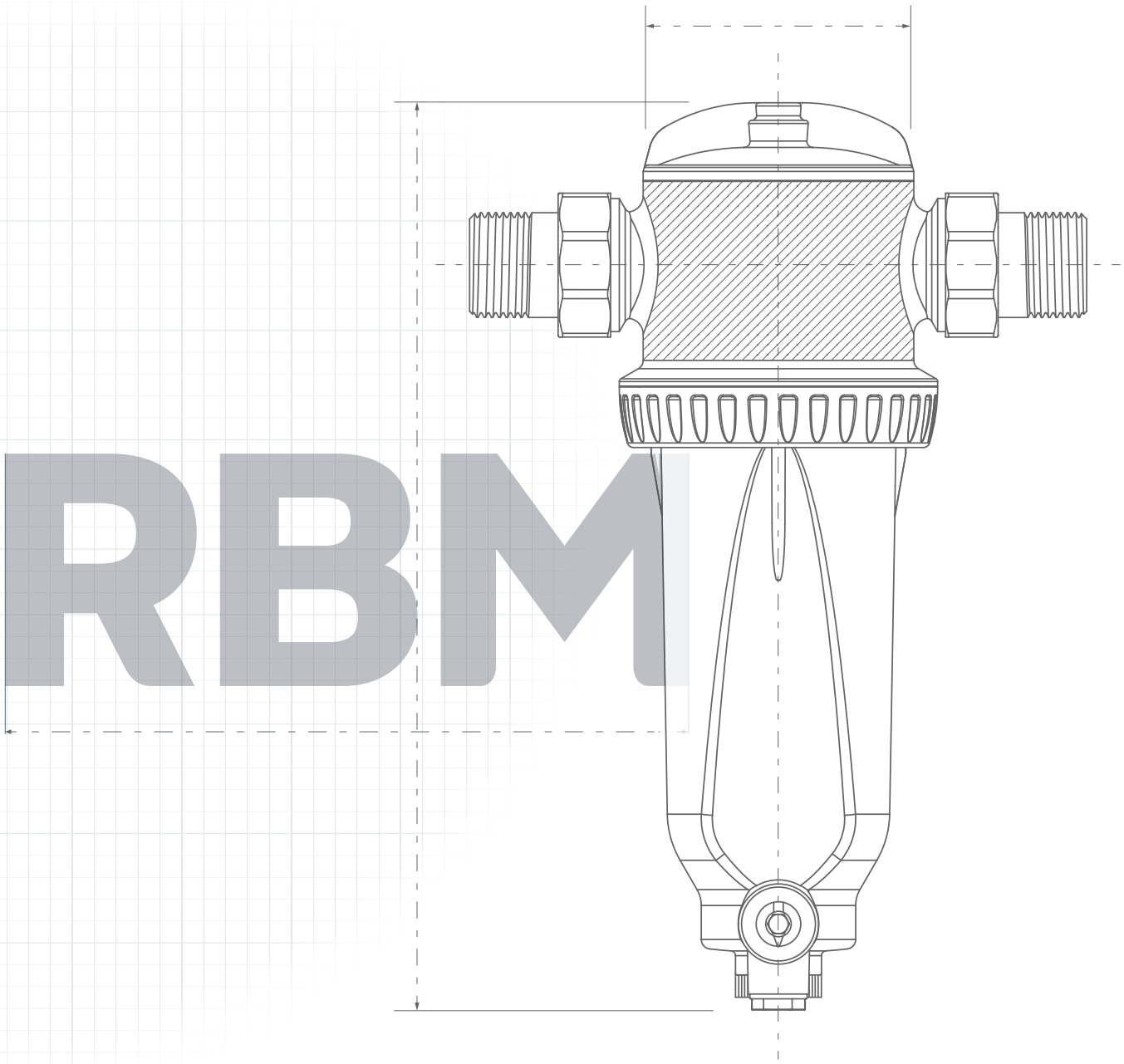

RBM

PRODUCTS

RBM manufactures all the connection and management components of **the modern plumbing and heating system.**
The product range has been developed following and anticipating the needs of the sector thanks to the work of the internal team that operate daily in the field.
The commitment of the RBM **R&D department** is aimed at the design of technologically advanced components and systems, capable of overcoming the increasingly more challenging tests and the pressing market needs.
The goal is to identify solutions that are better, easier to use, more convenient and reliable to achieve.

PRODUCT CERTIFICATIONS

RBM components are manufactured and tested in accordance with the main regulations and standards in force. Added to this is the guarantee of product certifications achieved internationally.

COMPANY CERTIFICATIONS

QUALITY MANAGEMENT SYSTEM - UNI EN ISO 9001

RBM obtained the UNI EN ISO 9001 certification in 1992, issued by ICIM and recognised by leading organisations in Italy and worldwide.

GENDER EQUALITY - UNI PDR 125:2022

In November 2024, RBM obtained the UNI PDR 125:2022 certification for Gender Equality, as part of a broader and ongoing commitment to sustainability.

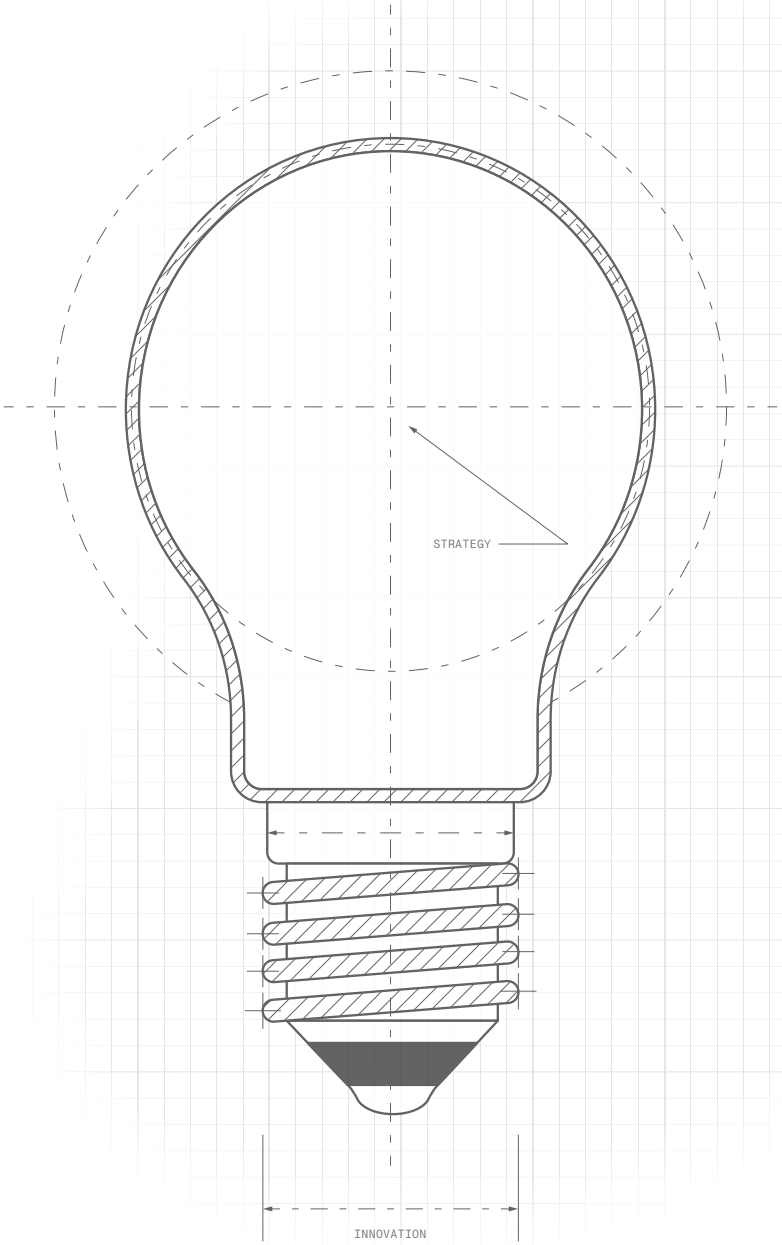
STRATEGY
INNOVATION

COMPANY

RBM designs and manufactures highly innovative components, hydro-thermo sanitary systems and climate wellness solutions, distinguished by their highly efficient performance and recognised effectiveness.

SOLUTIONS

We have always focused on solutions that operate invisibly and silently, helping to simplify and improve quality of life, with an emphasis on features guaranteeing maximum ease of installation and use.

Vision

We are convinced that spreading the culture of climate welfare and working concretely to make it possible for every individual we will be able to create a future in which cutting-edge technology and sustainability support each other, increasing the mutual value and shared benefits.

We want to guarantee a governance marked by integrity, transparency and respect, in order to disseminate good business practices and inspire new sustainability standards.

DOWNLOAD
our vision

That's why we have defined our CSR vision with a 5-pillar strategy:

1. Getting International
2. Innovating
3. Reducing carbon footprint
4. Partnership and Territory
5. Developing quality of life in the workplace

1. GETTING INTERNATIONAL

Opening up to international markets, both upstream and downstream, is essential to geographically diversify our business, spreading risks and investments across European and non-European markets. This international outlook also helps to get to know and compare different cultural contexts in order to develop skills that will be useful in a changing, global environment.

2. INNOVATING

We are paying increasing attention to energy saving and to production strategies and processes that reduce the impact on the environment. This standing innovation approach is on the increase, and will include partnerships with leading schools or with our customers and suppliers, to extend markets and enable new investments. The Research and Development programme is also aiming to respond to new market needs in order to improve production processes, products and services. We want to make them more effective, more efficient and more environment-friendly.

3. REDUCING OUR CARBON FOOTPRINT

Reducing our carbon footprint helps to fight climate change, and is a responsible way of increasing sales while improving environmental protection. Calculation of carbon footprint takes into account all sustainability issues, such as reducing energy consumption, transport, waste,circular economy, development of alternative construction systems, etc. Reducing the carbon footprint is part of the European CO2 emissions reduction target (Fit for 55).

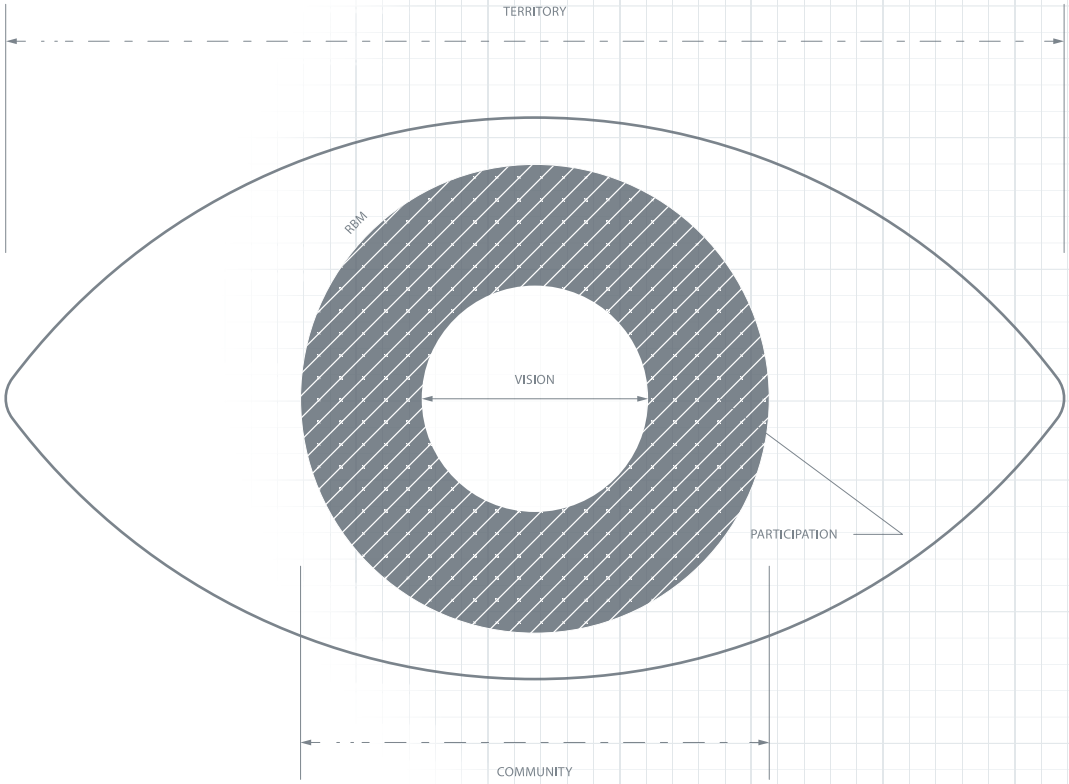

4. PARTNERSHIP AND TERRITORY

Partnership and collaboration among industry players are the keys to success in developing RBM in an open, dynamic and adaptive way. We want to make our partners, customers, suppliers and subcontractors aware of the ecological transition and encourage them to adopt good sustainability practices. In addition, we do not forget the context in which we operate: RBM is close to the territory and its communities through concrete support activities and participation and promotion of social, cultural and sporting initiatives.

5. DEVELOPING QUALITY OF LIFE IN THE WORKPLACE

Quality of Life in the workplace is crucial if we are to keep our teams motivated and healthy over the long term. Our aim is to provide a safe and stimulating working environment where everyone can express their individual potential.

RBM

01

HYDROTERMAL DISTRIBUTION

01. Boiler room distribution 5
02. Zone valves 22
03. Utility systems 26
04. Radiator and fan coil distribution 30
05. DHW distribution 44
06. Pressure reduction 53
07. Control and safety components 68
08. Ball valves, check valves and shut-off devices 88
09. Fittings 106
10. Water distribution 124
11. Equipment and tools 154

02

ENERGY EFFICIENCY

20. Water treatment 166
21. Valves for radiator and terminal control 236
22. Hydraulic balancing 279

03

CLIMATE COMFORT

30. Radiant climate control systems 293

S

SERVICE

60. Service 384

RBM

GROUP		CATEGORY		LINE	
01. Boiler room distribution	5	**01.01** Boiler room distribution	5	Hydraulic separetors	6
				Magnetic hydraulic separetors	8
				Multimix booster units DN25	10
				Multimix booster units DN32	14
				Accessories for multimix booster units	21
02. Zone Valves	22	**02.01** Zone valves	22	Compact zone valves	23
				Actuator for compact zone valves	25
03. Utility systems	26	**03.02** Utility satellites	26	Utility satellites	27
04. Radiator and fancoil distribution	30	**04.01** Radiator and fancoil distribution	30	Manifolds for heating and cooling systems	31
				Manifolds for large flow rates	37
				Accesories for manifolds	38
				Plastic housing boxes	42
05. Dhw distribution	44	**05.01**Dhw distribution	44	Mmanifolds for DHW systems	45
				Plastic housing boxes	49
06. Pressure reduction	53	**06.01** Pressure reduction	53	Diaphragm pressure reducing valves	56
				Piston-operated pressure reducing valves	62
				Water hammer damper	66
07. Control and safety components	68	**07.01** Pressure control and safety	68	Safety relief valves	69
				By-pass valve	78
				Filling units	79
		07.03 Fluids security control	82	Leak detectors	83
		07.04 Temperature control and safety	85	Anti-freeze valves	86

01. HYDROTHERMAL DISTRIBUTION

08. Ball valves, check valves and shut-off devices	88	**08.01** Ball valves, check valves and shut-off devices	88	Ball valves	89
				Check valves	104
				Accessories	105
09. Fittings	106	**09.01** Fittings	106	Fittings for valves and piping	107
				Fitting for manifolds	119
10. Water distributions	124	**10.01** Multilayer pipes	124	PE-Xc plain multy-layer pipe	125
				PE-RT multy-layer thermally coated pipe	126
				PE-RT multi-layer pipe with anti-condensation insulating	130
		10.02 Fitting for multi-layer pipes	132	Press fitting for multi-layer pipes	133
				Shut-off taps	147
				Compression fittings for multi-layer pipes	149
11. Equipment and tools	154	**11.01** Equipment and tools	154	Equipment for compression valves and fittings	155
				Equipment for multi-layer system	157
				Equipment for radiant system	162

RBM

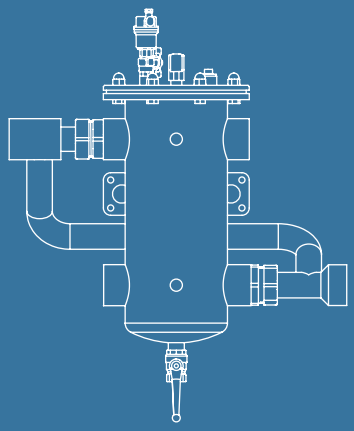

01. HYDROTHERMAL DISTRIBUTION

01. BOILER ROOM DISTRIBUTION

01.01 BOILER ROOM DISTRIBUTION

Hydraulic separators
Magnetic hydraulic separators
Multimix booster units DN 25
Multimix booster units DN 32
Accessories for multimix booster units

Series 617.A

Threaded, pre-dimensioned hydraulic separator.

Painted steel body.
Valves and degasser are made of brass.
PTFE ball valves seals.
Elastomer degasser seals.
Threaded union connections F UNI-EN-ISO 228.
Front connection for 1/2" F UNI-EN-ISO 228 accessories.

Max operating pressure:
- Separator body 10 Bar
- Ball valve 25 Bar
- Degasser 10 Bar

Allowed temperatures:
- Degasser 0 ÷ +115 °C
- Ball valve -15 ÷ +120 °C

Code	Size	Flow rate (l/h)	Box	Carton	Cat.
06170612	1"	2.500	1	1	01.01
06170712	1"1/4	4.000	1	1	01.01
06170812	1"1/2	6.000	1	1	01.01
06170912	2"	8.500	1	1	01.01

Supplied complete with MEGALUFT degasser, ball valve to discharge bottom and mud drainage and thermal insulation shell.

Series 617.B

Flanged, pre-dimensioned hydraulic separator.

Painted steel body.
Valves and degasser are made of brass.
PTFE ball valves seals.
Elastomer degasser seals.
PN16 flanged connections.
Connection for 1/2"F UNI-EN-ISO 228 accessories.

Max operating pressure:
- Separator body 10 Bar
- Ball valve 25 Bar
- Degasser 10 Bar

Allowed temperatures:
- Degasser 0 ÷ +115 °C
- Ball valve -15 ÷ +120 °C

Code	Size	Flow rate (l/h)	Box	Carton	Cat.
06170972	DN 50	9.000	1	1	01.01
06171072	DN 65	18.000	1	1	01.01
06171172	DN 80	28.000	1	1	01.01
06171372	DN 100	56.000	1	1	01.01
06171472	DN 125	75.000	1	1	01.01
06171572	DN 150	110.000	1	1	01.01

Supplied complete with MEGALUFT degasser, ball valve to discharge bottom and mud drainage and thermal insulation shell.
Flange suitable for coupling with counter-flange UNI EN 1092-1.

HYDRAULIC SEPARATOR

The **Hydraulic separator** is a pre-dimensioned manifold with the task of making the primary and secondary circuits independent if, hydraulically connected, they are equipped with their own circulation pumps.

THE PURPOSE

Insertion of the Separator, as a component of hydraulic separation between the two circuits, mainly provides the following functions:

- **cancels the mutual influence between the pumping stations of the different circuits**;
- **promotes the sedimentation, the collection and discharging of micro-impurities suspended in the fluid;**
- **promotes the deaeration of the circuits** by means of the automatic removal of the dissolved gases.

To facilitate the assembly of auxiliary components, such as temperature and pressure control components, system filling circuit, safety pipe for connection to expansion tank, etc... all RBM Hydraulic separators are supplied with threaded sleeves.

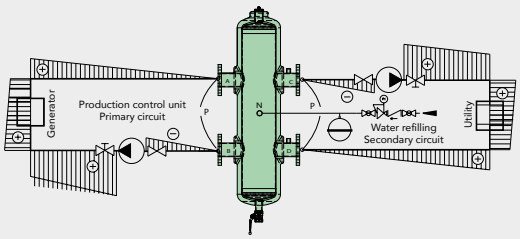

Typical diagram of insertion of the hydraulic separator which separates the primary and secondary circuit

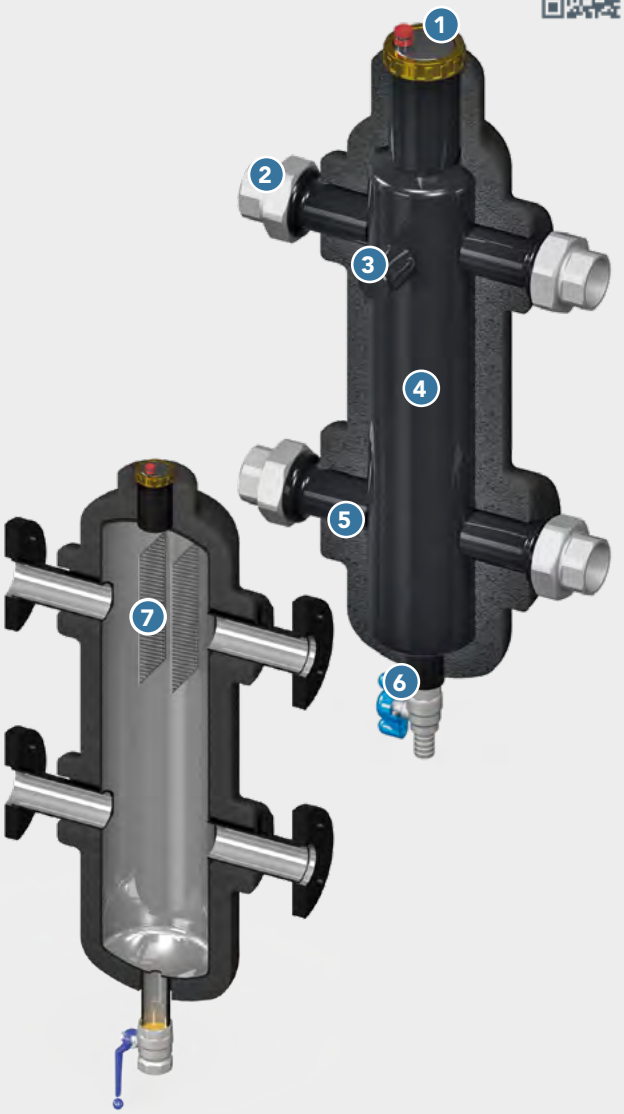

1. **Air venting valve**
2. **Threaded / flanged** connections to connect primary and secondary circuits
3. **Threaded sleeve** to install accessories
4. **Burnished steel body**
5. **Thermal insulation shell**
6. **Ball valve** to discharge sludge
7. **Double internal sludge/flow septum**

THE CHOICE

The Hydraulic separator is chosen based on the maximum flow rate recommended for the connection nozzles.
During the designing phase, pay special attention to possible temperature variations which the circuits can undergo due to induced mixing inside the Hydraulic separator.
A secondary circuit with flow rate higher than that circulating in the primary circuit (fig. 2), generates, in fact, through the Hydraulic separator, a flow temperature below that of the primary circuit.

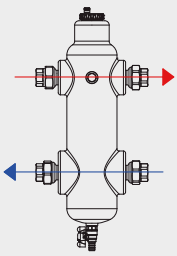

Fig. 1

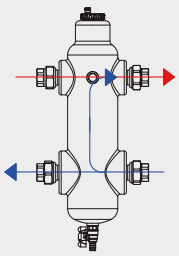

Fig. 2

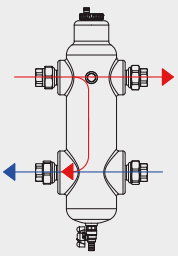

Fig. 3

Installation and maintenance facilitated by F union connections with flat seat;

Self-cleaning: equipped with discharge cock;

Supplied in a kit complete with insulation shell and gas exhaust device.

SEP MG COMPACT

Series 3813

Inspectable hydraulic separator with compact magnetic sludge remover filter for thermo-cooling control units.

Main body in painted steel on the outside.
Steel cover painted on the outside.
Ball valve body and air vent valve in brass.
Elastomer seals.
AISI stainless steel filter basket.
Threaded process connections UNI EN ISO 228.

- Pressure class PN10
- Max operating temperature 95 °C
- Neodymium magnet
- Degree of filtration 100 µm

FEATURES:

PATENTED

Code	Size	Kv (m³/h)	Box	Carton	Cat.
38130900	G 2"	87,00	1	1	01.01

Hydraulic separation.
Direct magnetic filtration.
Inspectionability.
Degassing.
Sludge removal.
Pressure gauges not supplied, must be ordered separately, code 2549.005 for scale 0÷4 bar - code 2579.005 for scale 0÷10 bar

Series 3974

Insulation shell made for Sep Mg Compact series 3813 of expanded polyethylene half-bearings with external antiscratch coating.

Half-bearings fixed with double-sided adhesive tape already applied.

- Fire behaviour class I
- Density 33 kg/m³
- Max operating temperature -40 ÷ +90 °C

Code	Size	Box	Carton	Cat.
39740902	2"	1	1	01.01

SEP MG COMPACT

Hydraulic separator, degasser and magnetic sludge remover filter

SEP MG Compact concentrates in a single compact component the functions of a hydraulic separator, magnetic sludge remover filter and degasser, suitable for protecting and separating the primary and secondary circuits of central heating and cooling unit plants.

SEP MG Compact allows you to solve:

- hydraulic separation system problems where, among other things, a constant power supply temperature to the utilities is required for the absence of uncontrollable mixing phenomena;
- the elimination of pollution by sand and rust particles formed as a result of corrosion and scaling, reducing the danger of wear and consequent damage to all components making up the system.

Ensures hydraulic separation between the primary and secondary circuits

Removes any impurity

It ensures the energy and functional efficiency of the system

Typical application in industrial, commercial, medium and large-scale civil systems

Reinforced stainless steel mesh with 100 micron filtering degree

Equipped with an easily accessible dosing point for adding chemicals treatment

Limited overall dimensions (in relation to the product category)

Reversible connections

Optional in-line installation on boiler rooms

Reduced maintenance costs:

> magnet protected from contact with water, easy to clean

> the large removable basket with bottom check valve prevents impurities from falling into the cylindrical body

> the large filtering surface reduces the frequency of filter maintenance

> the possibility of cleaning the filter without emptying completely reduces the amount of chemical additives to be replenished after each maintenance operation.

> filter clogging control gauges on request.

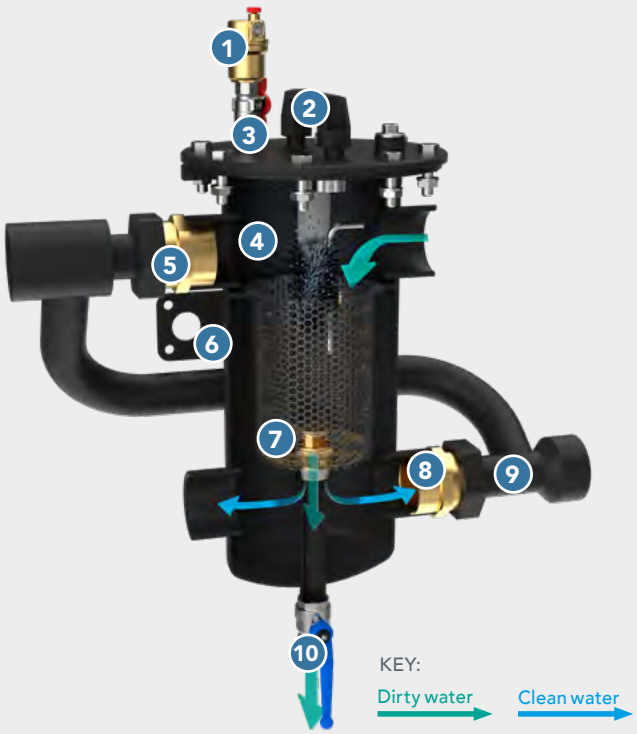

1. **Automatic air venting valve**
   to eliminate air at the filling stage, complete with the ball shut-off valve
2. **Inspection lid**
3. **Magnetic filtering unit**
   powerful neodymium magnet to capture ferrous particles such as rust that form due to corrosion during normal operation of a system, metal debris, processing residues, etc... The magnet is protected from direct contact with water by a removable conduit that facilitates cleaning the filter
4. **Sudden section increase**
   it causes the fluid to slow down
5. **Injection and separation kit**
   Anchorage of the KIT with unused sleeve shut- off fitting can.
6. **Wall fixing bracket**
7. **Filtering wire mesh**
   stainless steel stretched mesh (100 micron filtration degree) contained in a basket that can be easily pulled out from above. This is equipped with an automatic closing shutter, located at the bottom, to prevent impurities from leakage during maintenance
8. **Swivel fitting**
   for the reversibility of the injection and separation kit
9. **Injection and separation kit:**
   - It prevents parasitic mixing with the return fluid from the heating and cooling system, typical of traditional 4-pipe hydraulic separators, with the consequent inability of the system to guarantee a constant temperature on the secondary circuit;
   - It avoids thermal stratification phenomena and eliminates the need to reverse the connections for hot and cold distribution;
   - Absence of any reciprocal influence between the primary and secondary circuit pumping system;
   - Absence of a return circulation even if one of the two circuits stops pumping completely.
10. **Lower valve**
    for draining the separated, decanted and accumulated material inside the basket.

MULTIMIX
Series 3195

Multimix booster unit.

Wall-mounted hydraulic manifold for 2 or 3 zones for heating/cooling systems.
Black water-painted steel body.
Module supplied complete with EPP insulation casing (density 60 g/l) serving as casing and wall support of the whole mixing and booster unit.
Manifold can be transformed, as needed, into manifold/hydraulic separator by the manual opening of a shutter on the manifold (supplied in manifold/separator configuration).

1" M threaded connections from the heat generator. Connections on the user side with 1"1/2 F threaded unions.
Connection set-up for 3/4" F safety unit (supply) and connection for 3/4" F expansion tank (return). Manifold can be coupled to RD25 - RF MIX25 - RM MIX25 modules.

- Maximum operating pressure 6 bar
- Maximum operating temperature 110 °C
- Minimum cooling temperature 7 °C
- Size lxhxp: 402x525x250 mm (2 branches) - 555x525x250 mm (3 branches)

BIM

Code	Size	Ways	Box	Carton	Cat.
31950602	DN 25	2	1	1	01.01
31960602	DN 25	3	1	1	01.01

RD
Series 3197

RD Direct booster unit.

High temperature unit for heating/cooling systems complete with:
- High efficiency circulator model Wilo Yonos Para 25/6;
- 2 shut-off ball valves on system supply and return with built-in thermometer - 1" F connection;
- Check valve built into system return ball valve, can be excluded for counter washing.

- Maximum operating pressure 6 bar
- Maximum operating temperature 110 °C
- Minimum cooling temperature 7 °C

BIM

Code	Size	Box	Carton	Cat.
31970602	DN 25	1	1	01.01

01.01 BOILER ROOM DISTRIBUTION | MULTIMIX BOOSTER UNITS DN25

Series 3198

RF MIX mixing unit.

Fixed point mixed unit for heating only systems, complete with:
- 3-way mixing valve and thermostatic actuator;
- Safety contact thermostat on supply pipe (only model RF MIX B.T.);
- High efficiency circulator model Wilo Yonos Para 25/6;
- 2 shut-off ball valves on system supply and return with built-in thermometer - 1" F connection;
- Check valve built into system return ball valve, can be excluded for counter washing.

- Maximum operating pressure 6 bar
- Maximum operating temperature 110 °C

BIM

RF MIX B.T. - Low Temperature Fixed Point Booster

Code	Size	Box	Carton	Cat.
31980600	DN 25	1	1	01.01

Supply inclusive of thermostatic head model TL50.
Temperature adjustment range 25÷52 °C

RF MIX A.T. - High Temperature Fixed Point Booster

Code	Size	Box	Carton	Cat.
31980610	DN 25	1	1	01.01

Supply inclusive of thermostatic head model TL70S.
Temperature range 40÷70°C

Kit components (booster module and thermostatic head) supplied in 2 separate packages.

RM MIX

Series 3199

RM MIX mixing unit.

Mixed unit designed for shifting temperature for heating/cooling systems, complete with:
- 3-way mixing valve (Actuator to couple separately depending on electronic temperature control chosen - see range of actuators);
- High efficiency circulator model Wilo Yonos Para 25/6;
- 2 shut-off ball valves on system supply and return with built-in thermometer - 1" F connection;
- Check valve built into system return ball valve, can be excluded for counter washing.

- Maximum operating pressure 6 bar
- Maximum operating temperature 110 °C
- Minimum cooling temperature 7 °C

BIM

Code	Size	Box	Carton	Cat.
31990602	DN 25	1	1	01.01

Optional actuator series 3232 and 3233 to be ordered separately depending on the electronic temperature control chosen.

MULTIMIX DN25

RBM MULTIMIX is a hydronic distribution unit for thermal systems capable of managing 2 or 3 zones. It is characterised by compact size allowing it to be installed right below the boiler.
The different thermal zones can be supplied by 3 different types of booster unit.

The types of booster units are as follows:

- **RD:** direct booster unit (without mixing, for zones supplied with water at the same temperature(*) as the one produced by the heat generator).
- **RF MIX:** booster unit mixed at fixed point (constant temperature). RF MIX is supplied with two different thermostatic control models for heating only systems in high or low temperature.
- **RM MIX:** modulating mixed booster unit (shifting temperature). Can be coupled to different electric rotary actuators, chosen depending on the type of temperature control selected.

(*) minus the natural "thermal drop" on the hydraulic separator.

Combined and modular distribution system

Modular insulation shell (in EPP 40 g/l) with self-bearing function for wall mounting

Hydraulic distribution manifold/separator. RBM MULTIMIX DN25 is equipped with an innovative system which, through the manual intervention of a threaded shutter, can separate or joint the supply chamber with the return chamber, thus transforming the manifold/separator into a simple manifold and vice versa

Possibility of installing module even underneath

Simplified hydraulic connections and seals ensured by flat stops

Possibility of simultaneous installation of different types of booster units according to different requirements (e.g. 3 direct / 3 mixed / 2 direct + 1 mixed / 1 direct + 2 mixed)

Set up for installation of a automatic temperature control unit with external probe for shifting

CONFIGURATION WITH SHUTTER OPEN: "COMMUNICATING CHAMBERS"

(standard configuration in which the module is supplied).

The communication between the supply and return chambers makes it possible to manage a system with one or more circulators which interact upstream and downstream of the

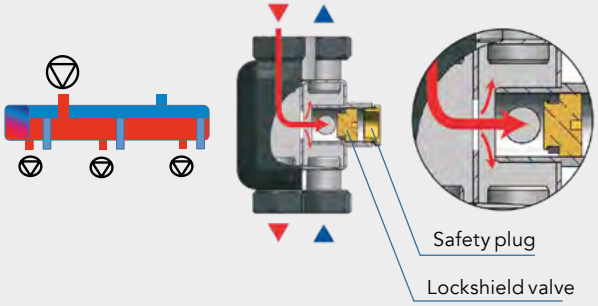

CONFIGURATION WITH SHUTTER CLOSED: "SEPARATE CHAMBERS".

(The standard configuration in which the module is supplied).

Configuration necessary when there is no circulator upstream

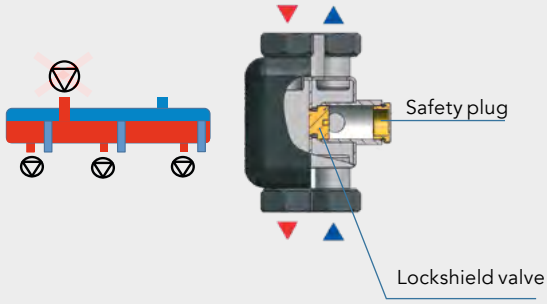

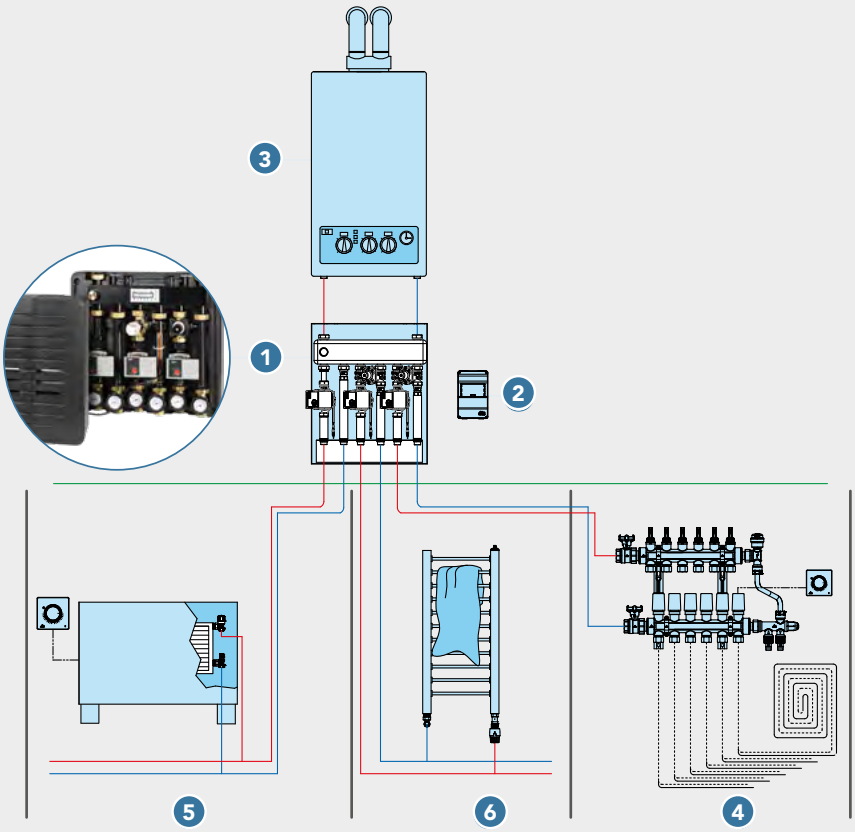

1. RBM MULTIMIX distribution unit
2. Temperature control
3. Boiler
4. Underfloor circuit (RM MIX low temperature)
5. Fan-coil circuit (RD high temperature)
6. Radiator circuit (RF MIX high temperature)

MULTIMIX S32

Series 3219

Hydraulic separator MULTIMIX S32.

Hydraulic separator with 1"1/2 M threaded connections, body made of galvanised steel (Fe 37.1) colour RAL 9004, complete with polyurethane foam insulation covered with aluminium sheet.
Complete with set-up for:
- Air vent 1/2" F connection (unplugged when supplied - any plug to be provided by the installer);
- 1/2" F safety unit connection (unplugged when supplied - any plug to be provided by the installer);
- System sludge drain (2" F hole complete with plug when supplied and positioned on the opposite side of the separator with respect to the manifold);
- 1"1/4 F threaded blind hole on the bottom for fastening the support foot (foot not included).

- Qn max 6.5 m³/h
- Maximum operating pressure 6 bar
- Maximum operating temperature 120 °C

Code	Size	Box	Carton	Cat.
32190702	DN 40	1	1	01.01

Series 3222

Insulated pipe kit to connect Multimix S32 vertical separator and Multimix C32 zone manifold.

Pipes are supplied complete with 2 1"1/2 x 2" reducing couplings for connection on Multimix S32 hydraulic separator side.

- Qn max 6.5 m³/h
- Maximum operating pressure 6 bar
- Maximum operating temperature 100 °C
- Capacity 4.8 l

Code	Size	Ways	Box	Carton	Cat.
32220702	DN 32	2 - 3	1	1	01.01
32220712	DN 32	4 - 5	1	1	01.01

MULTIMIX C32

Series 3223

Multimix C32 zone manifold.

Wall-mounted zone manifolds with double chamber for 2, 3, 4 and 5 zones for heating/cooling systems.
2" M threaded connections from the heat generator - centre distance 125 mm, connections to the areas with 2" F threaded fittings - centre distance 125 mm.
Steel body in black water paint (ST37.1 - RAL 9004), complete with black EPP insulation (density 40 g/l).
Square profile manifold.
Supply chamber equal to Ø52 mm (for DN50).
Return chamber equal to Ø41 mm (for DN40).
1" F connection for safety unit (delivery).
3/4" F connection for expansion tank (return).
Possibility of screwing mixing units set up for metering RD25 CONT, RF25 CONT and RM25 CONT by means of specific reductions code 3237.06.02

- Maximum power 120 kW (Δt 20 °C)
- Maximum operating pressure 6 bar
- Maximum operating temperature 120 °C
- Minimum operating temperature 7 °C

Code	Size	Ways	Box	Carton	Cat.
32230702	DN 32	2	1	1	01.01
32240702	DN 32	3	1	1	01.01
32250702	DN 32	4	1	1	01.01
32260702	DN 32	5	1	1	01.01

Series 3227

Wall support kit for Multimix C32 zone manifold.

Code	Box	Carton	Cat.
32270002	1	1	01.01

01.01 BOILER ROOM DISTRIBUTION | MULTIMIX BOOSTER UNITS DN32

RD32
Series 3228

RD32 Direct booster unit.

High temperature unit for heating/cooling systems complete with:
- High efficiency circulator, model Wilo Yonos Para 30/1-6;
- Ball valve with thermometer on system supply and return line;
- Spacer fitting with check valve;
- Black EPP insulation (density 40 g/l).

Maximum flow rate 3000 l/h
Maximum power (Δt = 20°C) 69,7 KW
DN32 - 1"1/4 nominal diameter
Brass ball valves
Check valve in acetalic resin (POM)
Elastomer gaskets
1"1/4 F x 2" M connections

- Maximum operating pressure 6 bar
- Maximum operating temperature 120 °C
- Minimum cooling temperature 11 °C

Code	Size	Box	Carton	Cat.
32280702	DN 32	1	1	01.01

RM MIX32
Series 3229

RM MIX32 mixing unit.

Mixing unit for heating/cooling system complete with:
- 3-way mixing valve (Actuator to couple separately according to temperature control chosen - see range of actuators);
- High efficiency circulator, model Wilo Yonos Para 30/1-6;
- Ball valve with thermometer on system supply and return line;
- Spacer fitting with check valve;
- Black EPP insulation (density 40 g/l).

Maximum flow rate 2400 l/h
Maximum power (Δt = 20°C) 41.3 kW
DN32 - 1"1/4 nominal diameter
Brass ball valves
Check valve in acetalic resin (POM)
Elastomer gaskets
1"1/4 F x 2" M connections

- Maximum operating pressure 6 bar
- Maximum operating temperature 120 °C
- Minimum cooling temperature 11 °C

Code	Size	Box	Carton	Cat.
32290702	DN 32	1	1	01.01

Optional actuator series 3232 and 3233 to be ordered separately depending on the electronic temperature control chosen.

RD25 CONT
Series 3234

Direct booster unit, set up for heat metering, RD25 CONT.

High temperature unit for heating/cooling systems complete with:
- High efficiency circulator, model Wilo Yonos Para 25/1-6;
- 2 1" F ball valves on system supply and return, each complete with thermometer;
- Check valve built into the system return ball valve (can be excluded for back washing);
- 1" - L 130 mm polymer template on system return line for future calorimeter installation with nQ 2.5 m³/h /Microclima HC25 model (various models available);
- Supply probe holder well for calorimeter;
- Insulation in black EPP (density 40 g/l).

Nominal diameter: DN25 - 1"
Brass ball valves
Check valve in acetalic resin (POM)
Elastomer gaskets
1" F x 1"1/2 M connections

- Maximum operating pressure 6 bar
- Maximum operating temperature 120 °C

Code	Size	Box	Carton	Cat.
32340602	DN 25	1	1	01.01

Unit set up for installation on Multimix C32 series 3223 central manifold

For installation on DN32 manifold, provide specific reduction code 3237.06.02
For meter range consult the specific section Direct Metering.

01.01 BOILER ROOM DISTRIBUTION | MULTIMIX BOOSTER UNITS DN32

Series 3235

Fixed point booster unit, set up for heat metering RF25 CONT.

Fixed point mixed unit for heating only systems, complete with:
- High efficiency circulator, model Wilo Yonos Para 25/1-6;
- 3-way mixing valve equipped with upper bypass (mixed system side) and thermostatic actuator;
- Safety contact thermostat on supply pipe (only model RF MIX B.T)
- Polymer template on system 1" - L 130 mm return line for future calorimeter installation with nQ 2.5 m³/h/Microclima HC25 model (various models available);
- Supply probe holder well for calorimeter;
- Insulation in black EPP (density 40 g/l).

Nominal diameter: DN25 - 1"
Brass ball valves
Acetal resin (POM) check valve
Elastomer gaskets
1" F x 1"1/2 M connections

- Maximum operating pressure 6 bar
- Maximum operating temperature 120 °C

RF25 CONT B.T. - Low Temperature Fixed Point Booster designed for metering purposes

Code	Size	Box	Carton	Cat.
32350600	DN 25	1	1	01.01

Supply inclusive of thermostatic head model TL50.
Temperature adjustment range 25÷52 °C

RF25 CONT A.T. High Temperature Fixed Point Booster designed for metering purposes

Code	Size	Box	Carton	Cat.
32350610	DN 25	1	1	01.01

Supply inclusive of thermostatic head model TL70S.
Temperature range 40÷70°C

Unit set up for installation on Multimix C32 series 3223 central manifold

For installation on DN32 manifold, provide specific reduction code 3237.06.02
For meter range consult the specific section Direct Metering.
Kit components (booster module and thermostatic head) supplied in 2 separate packages.

01.01 BOILER ROOM DISTRIBUTION | MULTIMIX BOOSTER UNITS DN32

RM25 CONT
Series 3236

Climatic booster unit, set up for heat metering.

Mixing unit with shifting temperature or heating/cooling systems, complete with:
- High efficiency circulator, model Wilo Yonos Para 25/1-6;
- 3-way mixing valve (Actuator to couple separately according to temperature control chosen - see range of actuators);
- 1" polymer template on system - L 130 mm return line for future calorimeter installation with nQ 2.5 m³/h / Microclima HC25 model (various models available);
- Supply probe holder well for calorimeter;
- Insulation in black EPP (density 40 g/l).

Nominal diameter: DN25 - 1"
Brass ball valves
Acetal resin (POM) check valve
Elastomer gaskets
1" F x 1"1/2 M connections

- Maximum operating pressure 6 bar
- Maximum operating temperature 120 °C

Code	Box	Carton	Cat.
32360602	1	1	01.01

Unit set up for installation on Multimix C32 series 3223 central manifold

For installation on DN32 manifold, provide specific reduction code 3237.06.02
For meter range consult the specific section Direct Metering.
Optional actuator series 3232 and 3233 to be ordered separately depending on the electronic temperature control chosen.

MULTIMIX DN32

RBM MULTIMIX DN32 is a hydronic system used in the distribution and management of zone system utilities both for winter heating and summer cooling.

It consists of an hydraulic separator and a distribution manifold (from 2 to 5 zones) connected one to another by pre-insulated pipes and relative booster units, available in two versions:

- **RD:** Direct booster unit (without mixing, for zones supplied with water at the same temperature(*) as the one produced by the heat generator).
- **RF MIX**: Modulating mixed booster unit (shifting temperature). Can be coupled to different electric rotary actuators, chosen depending on the type of temperature control selected.

In addition, DN25 booster units designed for metering are available, requiring a specific reducer for connection to the MULTIMIX C32 manifold.

(*) minus the natural "thermal drop" on the hydraulic separator.

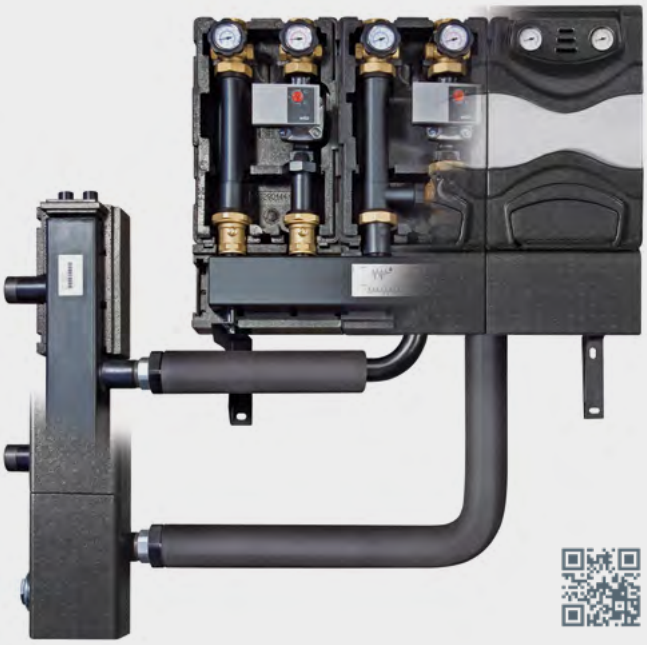

- Combined and modular distribution system
- Manifold, separator, connection pipes and booster units thermally insulated with EPP 40 g/l shells
- Simplified hydraulic connections and seals ensured by flat stops
- Rationalisation of space in boiler room
- Set up for installation of one or more temperature control units for shifting temperature mixing unit
- Up to 5 thermal zones
- High flow rates
- Possibility of direct metering to divide consumptions (only with DN25 booster unit)

FUNCTIONAL HYDRAULIC DIAGRAM MULTIMIX DN32 UNIT

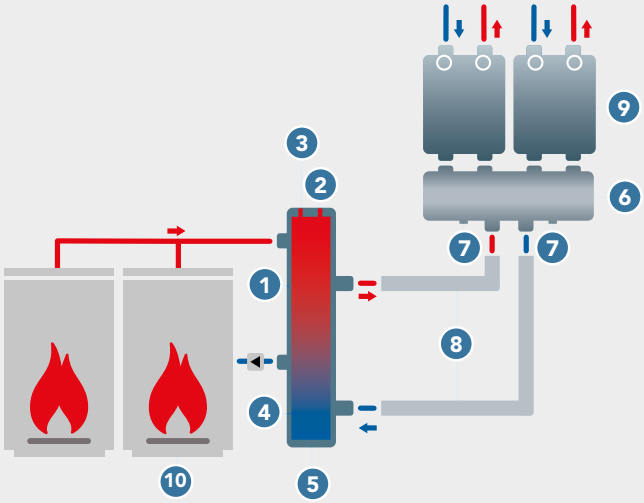

1. Hydraulic separator MULTIMIX S32 code 3219.07.02
2. Connection for air vent
3. Connection for temperature probe holder
4. System load-drain / sludge discharge
5. Connection for support foot (foot not supplied)
6. MULTIMIX C32 zone manifold (2-3-4-5 utilities)
7. Wall manifold support connection
8. Connection piping kit code 3222.07.X2
9. Direct booster unit RD32 code 3228.07.02 / mixed RM MIX32 code 3229.07.02
10. Heat generator

01.01 BOILER ROOM DISTRIBUTION | ACCESSORIES FOR MULTIMIX BOOSTER UNITS

Series 3237

Pair of reduction fittings for connection of DN25 units on DN32 manifold.

Code	Size A	Size B	Box	Carton	Cat.
32370602	2" M	1"1/2 F	1	1	01.01

Series 3232

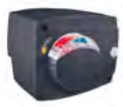

Electric rotary actuator for mixer valves.

- Power supply: AC 24V
- Motor starting time: 120s
- Protection class: IP54
- Operating torque: 5Nm
- Operation: manual with push button, fixed or temporary.
- NR 230V - 3 Points - 120s - 5Nm
- NR 2V - 3 Points - 120s - 5Nm
- NR 24V - 0÷10V - 120s - 5Nm

Code	Power supply	Box	Carton	Cat.
32320002	230V 3 POINTS	1	1	01.01
32320012	24V 3 POINTS	1	1	01.01
32320022	24V 0÷10V	1	1	01.01

Series 3233

Electric rotary actuator for mixer valves equipped with built-in fixed point adjustment.

Fixed point adjustment in heating/cooling.
Including delivery probe

- NR 230V - 120s - 6Nm

Code	Power supply	Box	Carton	Cat.
32330002	230V	1	1	01.01

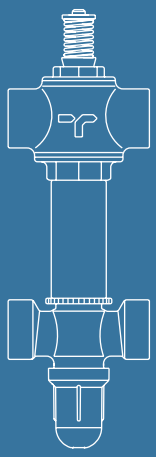

01. HYDROTHERMAL DISTRIBUTION

02. ZONE VALVES

02.01 ZONE VALVES

Compact zone valves

Actuators for compact zone valves

Series 814

Compact, motorized 2-way zone valve. Normally closed with servomotor not powered. Prepared for electrothermal servomotors code 2944.00. X2.

BIM

Nickel-plated brass body.
Obturator and seal in elastomer.
Elastomer rod seals.
Stainless steel springs.
Handwheel for manual opening in ABS.
Threaded connections MM UNI-EN-ISO 228.

- Max operating temperature 95 °C
- Max operating pressure 10 Bar
- Max differential pressure 1 Bar

Code	Size	Box	Carton	Cat.
08140420	G 1/2"	1	10	02.01
08140520	G 3/4"	1	10	02.01
08140620	G 1"	1	10	02.01

Series 813

Compact, motorized 3-way zone valve. Normally closed on the straight way with non-powered servomotor. Prepared for electrothermal servomotors code 2944.00. X2.

BIM

Nickel-plated brass body.
Obturator and seal in elastomer.
Elastomer rod seals.
Stainless steel springs.
Handwheel for manual opening in ABS.
Threaded connections MM UNI-EN-ISO 228.

- Max operating temperature 95 °C
- Max operating pressure 10 Bar
- Max differential pressure 1 Bar

Code	Size	Box	Carton	Cat.
08130420	G 1/2"	1	10	02.01
08130520	G 3/4"	1	10	02.01
08130620	G 1"	1	10	02.01

Series 736

Compact, motorized 4-way zone valve. Normally closed on the straight way with servomotor fitted, not powered. Can be coupled to Monoblock coplanar manifolds. Prepared for electrothermal servomotors code 2944.00. X2.

Nickel-plated brass body.
Obturator and seal in elastomer.
Elastomer rod seals.
Stainless steel springs.
Handwheel for manual opening in ABS.
In-line threaded union couplings FF UNI-EN-ISO 228.
Centre distance 50 ÷ 55mm.

- Max operating temperature 95 °C
- Max operating pressure 10 Bar
- Max differential pressure 1 Bar

Code	Size	Ways	Box	Carton	Cat.
07360420	G 1/2"	4	1	10	02.01
07360520	G 3/4"	4	1	10	02.01
07360620	G 1"	4	1	10	02.01

Series 3758.A

Fancoil 2-way motorised zone valve. Normally closed with actuator not powered.

Nickel-plated brass body.
EPDM+PEROX shutter and seal.
EPDM+PEROX rod seals.
AISI302 stainless steel springs.
Cap for manual opening in ABS.
Threaded in-line connections FF UNI-EN-ISO 228.

- Max operating temperature +95 °C
- Max operating pressure 10 Bar
- Max differential pressure 1 Bar

Code	Size	Kv (m³/h)	Box	Cat.
37580420	G 1/2"	1.64	1	02.01
37580520	G 3/4"	2.87	1	02.01

Series 3758.B

Fancoil 4-way motorised zone valve. Normally closed with actuator not powered.

Nickel-plated brass body.
EPDM+PEROX shutter and seal.
EPDM+PEROX rod seals.
AISI302 stainless steel springs.
Cap for manual opening in ABS.
Threaded in-line connections FF UNI-EN-ISO 228.

- Max operating temperature +95 °C
- Max operating pressure 10 Bar
- Max differential pressure 1 Bar

Code	Size	Kv (m³/h)	Box	Cat.
37580440	G 1/2"	1.31	1	02.01
37580540	G 3/4"	2.98	1	02.01

02.01 ZONE VALVES | ACTUATORS FOR COMPACT ZONE VALVES

Series 2944.A

Thermo-electrically controlled actuator for compact zone valves, complete with valve body clamping swivel and electric power cable.

Normally closed valve position when power missing.

- Power supply 24/230 V
- Consumption 2,5 W
- Frequency 50/60 Hz
- Electric protection IP54
- Operating temperature -5 ÷ +50 °C
- Switch contact rating (0.5A) 1 A (if any)
- 5 mm stroke
- Size (lxhxp): 44x52x60 mm

CERTIFICATIONS:

CE

Thermo-electrically controlled actuator

Code	Power supply	Box	Carton	Cat.
29440002	230V AC	1	50	02.01
29440012	24V AC	1	50	02.01

Version without auxiliary microswitch (2 wires)

Thermo-electrically controlled actuator with auxiliary microswitch

Code	Power supply	Box	Carton	Cat.
29440042	230V AC	1	50	02.01
29440052	24V AC	1	50	02.01

Version supplied with auxiliary microswitch (4 wires)

01. HYDROTERMAL DISTRIBUTION

03. UTILITY SYSTEMS

03.02 UTILITY SATELLITES

Utility satellites

Series 3239

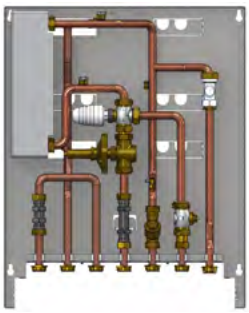

Micromega NEW zone module. For heating and Domestic Hot Water instant production.

Flush mounted substation for heating and instantly producing domestic hot water, suitable for installation in flats and single houses with centralised systems.
Consisting of:
Brazed stainless steel heat exchanger, 20 plates;
DHW outlet thermostatic valve probe holder well;
Variable-calibration differential valve 5÷30 kPa;
3-way valve with proportional thermostatic regulation;
Manual air vent valve;
Template for meter AFS L 80 mm, 3/4" M connections;
Template for thermal energy meter L 110 mm, connections 3/4" M;
Meter delivery probe well;
Primary delivery Y filter;
Heating circuit ON-OFF 2-way valve;
230 V or 24 V electric actuator (actuator supplied separately, see accessories section);
Balancing lockshield valve.

- Primary fluid maximum operating temperature 85 °C
- Maximum operating pressure 10 Bar
- Power supply 230 V
- Minimum domestic cold water temperature 10 °C
- Domestic hot water maximum temperature 50 °C
- Exchanger nominal power 40 kW
- Dimensions 570x800x160 mm

Code	Size	DHW(kW)	Box	Carton	Cat.
32390502	3/4"	40	1	1	03.02

Domestic Hot Water instant production
Thermo-electric actuator series 2881 to be ordered separately (see page).

Series 3240

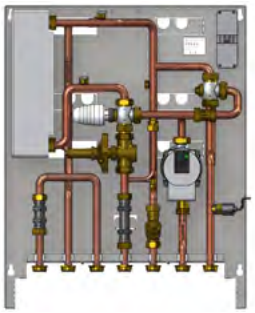

Micromega MIX zone module. For heating and Domestic Hot Water instant production.

Flush mounted substation for heating and instantly producing domestic hot water, suitable for installation in flats and single houses with centralised systems.
Consisting of:
Brazed stainless steel heat exchanger, 20 plates;
DHW outlet thermostatic valve probe holder well;
Variable-calibration differential valve 5÷30 kPa;
3-way valve with proportional thermostatic regulation;
Manual air vent valve;
Template for meter AFS L 80 mm, 3/4" M connections;
Template for thermal energy meter L 110 mm, connections 3/4" M;
Meter delivery probe well;
Primary delivery Y filter;
3-way mixing valve on heating side. Fixed point management (Thermostatic control supplied separately, see accessories section);
High-efficiency electronic circulator Wilo Para SC 15/6;
Check valve.

- Primary fluid maximum operating temperature 85 °C
- Maximum operating pressure 10 Bar
- Power supply 230 V
- Minimum domestic cold water temperature 10 °C
- Domestic hot water maximum temperature 50 °C
- Exchanger nominal power 40 kW
- Dimensions 570x800x160 mm

Code	Size	DHW(kW)	Box	Carton	Cat.
32400502	3/4"	40	1	1	03.02

Domestic Hot Water instant production
Thermostatic control model TL50 or TL70 M to be ordered separately (see page 395).

Series 3241

Installation and shut-off template for Micromega 3239 and 3240 Series modules.

Shut-off kit consisting of a galvanised steel template, ball valves and check valves downstream of the module.

- Ball valves, 3/4" F connection

Code	Box	Carton	Cat.
32410502	1	1	03.02

Series 3242

Series 3239 and 3240 Micromega module recessed box.

Galvanised steel flush mounted containment box complete with frame and door.

- Colour: white
- Dimensions (lxhxd): 570x800x160 mm

Code	Box	Carton	Cat.
32420002	1	1	03.02

HIULTRA
Series 3891

Indirect utility satellite for instantaneous domestic hot water production and winter air conditioning.

It is the ideal solution for distributing, regulating and metering the thermal energy produced in centralised system contexts.
The satellite is designed to meet the heating and domestic hot water needs which, like for a wall-mounted boiler, is produced instantaneously by the utility on demand.
RBM's HIUltra is equipped with an electronic regulator which, through the return temperature control of the system, performs single control functions to optimise performance and operation.

Hydraulic units featuring an advanced technology structure that is widely established in the world of wall boilers
Full adjustment of the heating and DHW functions
Optimisation of the heating control also with climate compensation and on the system return line
DHW production function quick response
Set up to manage system functions with prepaid mode
Complete with fully insulated box
Equipped with dynamic balancing function and regulation with pressure independent valve (PICV)

- Maximum primary circuit pressure (DH) 16 bar
- Maximum primary circuit temperature (DH) 90° C
- Maximum primary circuit differential pressure (DH) 4 bar
- Max heating (RISC) circ. pressure/relief valve setting 3 bar
- Max DHW output at 1300 l/h with 80° C primary circuit (DH) and ΔT 40° C: 80 kW
- Max HEAT output at 1300 l/h with 80° C primary circuit (DH): 30 kW
- Dimensions 585x465x265 mm

CERTIFICATIONS:

Code	Size	DHW(kW)	Box	Carton	Cat.
38910000	3/4"	80	1	1	03.02

For further technical information, see the use and installation manual MI3891.0_00 HIUltra utility satellite.

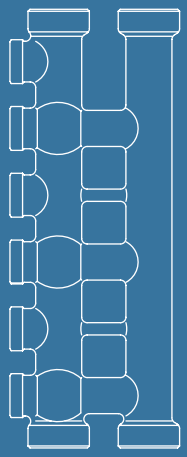

01.
HYDROTHERMAL
DISTRIBUTION

04. RADIATOR AND FAN COIL DISTRIBUTION

04.01 RADIATOR AND FAN COIL DISTRIBUTION

Manifolds for heating and cooling systems
Manifolds for large flow rates
Accessories for manifolds
Plastic housing boxes

MONOBLOCK

Series 34

Single module for manifold, RBM standard male junctions

Nickel-plated brass body.
Junction connections, centre distance 37 mm threaded M standard RBM, for copper, polyethylene and multilayer pipe fittings.
Threaded in-line connections MF UNI-EN-ISO 228.

- Max operating temperature 110 °C
- Max operating pressure 10 Bar

CERTIFICATIONS:
DHW

BIM

Code	Size	Ways	Box	Carton	Cat.
00340500	G 3/4"	1	10	40	04.01
00350500	G 3/4"	2	10	40	04.01
00360500	G 3/4"	3	10	40	04.01
00340600	G 1"	1	10	40	04.01
00350600	G 1"	2	10	40	04.01
00360600	G 1"	3	10	40	04.01
00350700	G 1"1/4	2	10	40	04.01
00360700	G 1"1/4	3	10	40	04.01

Standard RBM thread W24.5x19F junction side

Use fittings with RBM Standard thread for pipe connection.
Please use brackets cod. 129.0X.00 for fixing in plastic boxes or brackets cod. 899.00.00 for fixing in metal boxes.

MONOBLOCK

Series 35.A

Single module for manifold, G1/2" female junctions

Nickel-plated brass body.
FG1/2" threaded junction connections, centre distance 37 mm, UNI-EN-ISO 228.
Threaded in-line connections MF UNI-EN-ISO 228.

- Max operating temperature 110 °C
- Max operating pressure 10 Bar

CERTIFICATIONS:
DHW

Code	Size	Ways	Box	Carton	Cat.
00350540	G 3/4" MF	2x1/2"F	10	40	04.01
00360540	G 3/4" MF	3x1/2"F	10	40	04.01
00350640	G 1" MF	2x1/2"F	10	40	04.01
00360640	G 1" MF	3x1/2"F	10	40	04.01

F thread G1/2" branch side

Please use brackets cod. 129.0X.00 for fixing in plastic boxes or brackets cod. 899.00.00 for fixing in metal boxes.

MONOBLOCK
Series 35.B

Single module for manifold, G1/2" male junctions

Nickel-plated brass body.
M G1/2" threaded junction connections, centre distance 37 mm, for multilayer pipe fittings.
Threaded in-line connections MF UNI-EN-ISO 228.

- Max operating temperature 110 °C
- Max operating pressure 10 Bar

CERTIFICATIONS:
DHW

Code	Size	Ways	Box	Carton	Cat.
00350550	G 3/4" M	2x1/2"M	10	40	04.01
00360550	G 3/4" M	3x1/2"M	10	40	04.01
00350650	G 1" M	2x1/2"M	10	40	04.01
00360650	G 1" M	3x1/2"M	10	40	04.01

Junctions side thread M G1/2"

Use series 2796 fittings with G1/2" thread (see page 117) for pipe connection.
Please use brackets cod. 129.0X.00 for fixing in plastic boxes or brackets cod. 899.00.00 for fixing in metal boxes.

MONOBLOCK
Series 63

Single manifold with in-line connections and unilateral junctions.

Nickel-plated brass body.
Junction connections, centre distance 37 mm threaded M standard RBM for copper, polyethylene and multilayer pipe fittings.
Threaded in-line connections FF UNI-EN-ISO 228.

- Max operating temperature 110 °C
- Max operating pressure 10 Bar

CERTIFICATIONS:
DHW

BIM

Code	Size	Ways	Box	Carton	Cat.
00630500	G 3/4"	4	3	12	04.01
00630520	G 3/4"	5	3	12	04.01
00640500	G 3/4"	6	3	12	04.01
00640520	G 3/4"	7	3	12	04.01
00650500	G 3/4"	8	3	12	04.01
00630600	G 1"	4	3	12	04.01
00630620	G 1"	5	3	12	04.01
00640600	G 1"	6	3	12	04.01
00640620	G 1"	7	3	12	04.01
00650600	G 1"	8	3	12	04.01
00660600	G 1"	10	3	12	04.01

Standard RBM thread W24.5x19F junction side

Use fittings with RBM Standard thread for pipe connection.
Please use brackets cod. 129.0X.00 for fixing in plastic boxes or brackets cod. 899.00.00 for fixing in metal boxes.

Series 1150

Insulation shell for RBM Monoblock manifold made up from expanded polyethylene half-bearings with external antiscratch coating.

Complete with clips to fix half-bearings.

- Fire behaviour class I
- Density 33 kg/m³
- Max operating temperature -40 ÷ +90 °C

Code	Size	Ways	Box	Carton	Cat.
11500500	3/4"	2	5	5	04.01
11500510	3/4"	3	5	5	04.01
11500520	3/4"	4	5	5	04.01
11500530	3/4"	5	1	5	04.01
11500540	3/4"	6	5	5	04.01
11500550	3/4"	7	1	20	04.01
11500560	3/4"	8	1	1	04.01
11500600	1"	2	1	5	04.01
11500610	1"	3	1	5	04.01
11500620	1"	4	1	5	04.01
11500630	1"	5	1	5	04.01
11500640	1"	6	1	5	04.01
11500650	1"	7	1	1	04.01
11500660	1"	8	1	1	04.01
11500680	1"	10	1	30	04.01
31020720	1"1/4	2	1	15	04.01
31020730	1"1/4	3	1	10	04.01

Thermal insulation suitable for manifolds with junction connections 37 mm centre distance.

Series 293

Single module for manifold, centre distance 50mm, flat seat, G 1/2"

Nickel-plated brass body.
Junction connections, M G 1/2", flat seat for copper, polyethylene and multilayer pipe fittings. Centre distance 50 mm.

- Max operating temperature 110 °C
- Max operating pressure 10 Bar

CERTIFICATIONS:
DHW

Code	Size A	Size B	Ways	Box	Carton	Cat.
02930500	G 3/4"	G 1/2"	3	10	40	04.01
02940500	G 3/4"	G 1/2"	4	10	40	04.01
02950500	G 3/4"	G 1/2"	5	8	32	04.01
02960500	G 3/4"	G 1/2"	6	5	20	04.01
02970500	G 3/4"	G 1/2"	7	5	20	04.01
02980500	G 3/4"	G 1/2"	8	5	20	04.01

Junctions side thread M G 1/2" (flat seat)

Use fittings with G1/2" thread, flat seat (see page 116) for pipe connection.
Please use brackets cod. 899.00.00 for fixing in metal boxes.

Series 100

Single modular manifold, with in-line connections and one-way lateral junctions.

Nickel-plated brass body.
Euroconus M3/4" threaded junction connections, centre distance 50 mm, for copper, polyethylene and multilayer pipe fittings.
Threaded in-line connections MF UNI-EN-ISO 228.

- Max operating temperature 110 °C
- Max operating pressure 10 Bar

CERTIFICATIONS:
DHW

Code	Size	Ways	Box	Carton	Cat.
01000650	G 1"	2x3/4"	10	10	04.01
01010650	G 1"	3x3/4"	8	8	04.01
01020650	G 1"	4x3/4"	3	3	04.01

EUROCONUS thread G3/4" UNI-EN-ISO 228

Use fittings with Euroconus G3/4" thread for pipe connection.
Use brackets cod. 219.0X.00 for metal case fastening.

Series 3202.A

Modular brass manifold kit, center distance 37 mm.

Each kit contains:
n° 1 multi-way manifold unit complete with micrometric lockshield valves with graduated handwheel;
n° 1 multi-way manifold unit complete with valves with thermostatic option with hand wheel;
1 pair of steel brackets for fixing manifolds.

- Temperature range 0÷100 °C
- Max operating pressure 10 Bar

BIM

Code	Size	Ways	Box	Carton	Cat.
32020690	1"	2+2	1	1	04.01
32030690	1"	3+3	1	1	04.01
32040690	1"	4+4	1	1	04.01
32050690	1"	5+5	1	1	04.01
32060690	1"	6+6	1	1	04.01
32070690	1"	7+7	1	1	04.01
32080690	1"	8+8	1	1	04.01
32090690	1"	9+9	1	1	04.01
32100690	1"	10+10	1	1	04.01
32110690	1"	11+11	1	1	04.01
32120690	1"	12+12	1	1	04.01
32130690	1"	13+13	1	1	04.01
32140690	1"	14+14	1	1	04.01

Centre distance between connections via distribution manifolds 37 mm - threading Standard RBM W24,5x19F

Manifold kit can be fix on in walls in 8 cm box.
Composition with adjustable lockshield valves with graduated handwheel.
Use multilayer or polyethylene pipe fittings with Standard RBM thread for pipe connection.

Set up Seriess 3189 thermo-electric actuators to automatically shut off the single circuits.

MODULAR COMPACT BRASS MANIFOLD KIT

(37mm C.T.C.)

SUPER COMPACT

37 mm c.t.c. manifold

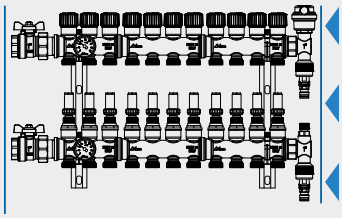

50 mm c.t.c. manifold

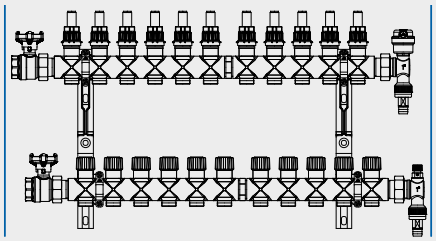

Compact: manifold kit can be inserted in 80 mm housing boxes (Box1 series 2606)

Manual/Automaticon-offinterception of the circuits

Nickel plated brass manifolds: high quality material for best reliability through time; not affected by corrosion that could weaken system efficiency

1. Dedicated actuators Series 3189
2. Manifold 1"
3. Suitable for ball valves with M inlet coupling (without OR seals)
4. Standard RBM threaded connections W24.5x19F
5. Compact: 37 mm c.t.c.

04.01 RADIATOR AND FAN COIL DISTRIBUTION | MANIFOLDS FOR LARGE FLOW RATES

Series 227

Basic 1"1/4 manifold kit

Nickel-plated brass manifolds.
Steel brackets.
EUROCONUS M 3/4" threaded junction connections, centre distance 50 mm for copper, polyethylene and multilayer pipe fittings.
Threaded in-line FF connections (UNI-EN-ISO 228).

- Max. temperature: 110° C
- Maximum operating pressure: 1000 kPa

Code	Size	Ways	Box	Carton	Cat.
02270780	G 1"1/4	3	1	1	04.01
02280780	G 1"1/4	4	1	1	04.01
02290780	G 1"1/4	5	1	1	04.01
02300780	G 1"1/4	6	1	1	04.01
02310780	G 1"1/4	7	1	1	04.01
02320780	G 1"1/4	8	1	1	04.01
02330780	G 1"1/4	9	1	1	04.01
02340780	G 1"1/4	10	1	1	04.01
02350780	G 1"1/4	11	1	1	04.01
02360780	G 1"1/4	12	1	1	04.01

Euroconus G3/4" thread - UNI-EN-ISO 228

Series 196

FF 1"1/4 single MONOBLOCK manifold produced from casting, with in-line connections and one-way lateral junctions.

Nickel-plated brass body.
EUROCONUS M 3/4" threaded junction connections, centre distance 50 mm for copper, polyethylene and multilayer pipe fittings.
Threaded in-line connections FF UNI-EN-ISO 228.

- Max. temperature: 110° C
- Maximum operating pressure: 1000 kPa

Code	Size	Ways	Box	Carton	Cat.
01960730	G 1"1/4	3	3	3	04.01
01970730	G 1"1/4	4	2	2	04.01
01980730	G 1"1/4	5	3	3	04.01
01990730	G 1"1/4	6	2	2	04.01
02000730	G 1"1/4	7	3	3	04.01
02010730	G 1"1/4	8	2	2	04.01
02020730	G 1"1/4	9	2	2	04.01
02030730	G 1"1/4	10	2	2	04.01
02040730	G 1"1/4	11	2	2	04.01
02050730	G 1"1/4	12	2	2	04.01

Euroconus G3/4" thread - UNI-EN-ISO 228

04.01 RADIATOR AND FAN COIL DISTRIBUTION | ACCESSORIES FOR MANIFOLDS

Series 3769

Single insulation shell for 1"1/4 manifold, made of expanded polyethylene half-bearings with external antiscratch coating.

Fire behaviour class I
Density 33 kg/m³
Max operating temperature -40 ÷ +90 °C

Code	Ways	Box	Carton	Cat.
37691200	12	1	1	04.01

To insulate a complete manifold kit, order 2 pieces.

Series 3781

Insulation shell for thermometer holder well consisting of expanded polyethylene half-casings with external antiscratch coating.

Fire behaviour class I
Density 33 kg/m³
Max operating temperature -40 ÷ +90 °C

Code	Size	Box	Carton	Cat.
37810000	G 1"1/4	1	1	04.01

Series 3780

Insulation shell for VasaTre 216 series automatic air vent/degassing valve, consisting of polyethylene foam half shells with scratch-resistant film outer coating.

Fire behaviour class I
Density 33 kg/m³
Max operating temperature -40 ÷ +90 °C

Code	Size	Box	Carton	Cat.
37800000	1"1/4	1	1	04.01

04.01 RADIATOR AND FAN COIL DISTRIBUTION | ACCESSORIES FOR MANIFOLDS

Series 3782

Insulation shell for series 450.A air and water discharge terminal unit, consisting of polyethylene foam half shells with scratch-resistant film outer coating.

Fire behaviour class I
Density 33 kg/m³
Max operating temperature -40 ÷ +90 °C

Code	Size	Box	Carton	Cat.
37820000	1"1/4	1	1	04.01

Series 070

T-terminal fitting with plugged junctions, suitable for the possible connection of air vent valve and bibcock

Nickel-plated brass body.
Junction connections, F 3/8" and F 1/2".
Threaded connections M UNI-EN-ISO 228.

- Max. temperature: 110° C
- Max pressure: 1000 kPa

CERTIFICATIONS:

T-shaped terminal fitting M

Code	Size	Box	Carton	Cat.
00700710	1"1/4	10	10	04.01

T-shaped terminal fitting F

Code	Size	Box	Carton	Cat.
00700700	1"1/4	10	10	04.01

Series 96

Multifunction line fitting with plugged junction. Suitable for the possible connection of air vent valve, thermometer or discharge bibcock.

Nickel-plated brass body.
F 1/2" junction connections.
Threaded connections MF UNI-EN-ISO 228.

- Max. temperature: 110° C
- Max pressure: 1000 kPa

Code	Size	Box	Carton	Cat.
00960700	1"1/4	10	10	04.01

Series 219

Pair of steel brackets to fix single manifolds in metal boxes (for boxes series 2606.A)

Centre distance 220 mm

Code	Size	Box	Carton	Cat.
02190600	1"	1	50	04.01
02190700	1"1/4	1	50	04.01

Series 105

Straight single adjustment manual shut-off valve for branch circuits from modular manifolds with standard RBM connections.

Nickel-plated brass body.
Elastomer seals.
Shockproof ABS handwheel.
Rotary connection to manifold, threaded F standard RBM with seal.
Threaded M standard RBM connection for copper, polyethylene and multilayer pipe fittings.

- Max operating temperature 110 °C
- Max operating pressure 10 Bar

CERTIFICATIONS:
DHW

Code	Size	Box	Carton	Cat.
01050000	RBM	10	10	04.01

RBM Standard Thread (W24,5x19F)

Series 106

Simple adjustment straight shut-off lockshield valve for branch circuits from modular manifolds (standard RBM connections).

Nickel-plated brass body.
Elastomer seals.
Shockproof ABS handwheel.
Rotary connection to manifold, threaded F standard RBM with seal.
Threaded M standard RBM connection for copper, polyethylene and multilayer pipe fittings.

- Max operating temperature 110 °C
- Max operating pressure 10 Bar

CERTIFICATIONS:
DHW

Code	Size	Box	Carton	Cat.
01060000	RBM	10	10	04.01

RBM Standard Thread (W24,5x19F)

Series 556

Thermostatically controlled straight valve for branch circuits from modular manifolds (standard RBM connections).

Nickel-plated brass body.
Elastomer seals.
Shockproof ABS handwheel.
Rotary connection to manifold, threaded F standard RBM with seal.
Threaded M standard RBM connection for copper, polyethylene and multilayer pipe fittings.

- Max operating temperature 110 °C
- Max operating pressure 10 Bar

Code	Size	Box	Carton	Cat.
05560000	RBM	10	10	04.01

RBM Standard Thread (W24,5x19F)

Can be coupled to thermoelectric actuatorss RBM code 306.00.X2

Series 899

Pair of plastic brackets to fix Single manifolds in metal boxes (for boxes code 2606.XX.02).

Bracket centre distance 220 mm.

Code	Size	Box	Carton	Cat.
08990000	3/4″ ÷ 1″	1	1	04.01

04.01 RADIATOR AND FAN COIL DISTRIBUTION | PLASTIC HOUSING BOXES

Series 85

Manifold plastic containment and inspection box without bottom, complete with removable cover with ventilation slots, counter frame, fixing screws and removable protection for plastering.

Flush mount installation, paintable cover

Code	LxH (mm)	Model	Box	Carton	Cat.
00853500	250x350	SF	24	24	04.01
00855000	250x500	SF	18	18	04.01
00855800	310x580	SF	13	13	04.01
00854000	400x500	SF	13	13	04.01
00857500	360x750	SF	14	14	04.01

Series 86

Manifold plastic containment and inspection box with bottom, complete with removable cover with ventilation slots, counter frame, fixing screws and removable protection for plastering

Flush mount installation, paintable cover

BIM

Code	LxH (mm)	Model	Box	Carton	Cat.
00863500*	250x350	CF	18	18	04.01
00865000*	250x500	CF	11	-	04.01
00865800*	310x580	CF	10	10	04.01
00864000*	400x500	CF	9	9	04.01
00867500*	360x750	CF	10	10	04.01

*Adjustable depth 85÷100 mm
**Adjustable depth 95÷120 mm

Series 362

Manifold plastic containment and inspection box with bottom and side closures, complete with removable cover with ventilation slots, brackets and fixing screws for simple manifolds ø3/4" centre distance 37 mm.

Flush mount installation, paintable cover

Code	LxH (mm)	Model	Box	Carton	Cat.
03623500*	250x350	CFC	10	10	04.01
03625000*	250x500	CFC	4	4	04.01

*Fixed depth 100 mm

04.01 RADIATOR AND FAN COIL DISTRIBUTION | PLASTIC HOUSING BOXES

Series 128

Pair of plastic brackets to fix one-sided and two-sided manifolds in plastic boxes (for boxes code 86.XX.00).

Bracket centre distance 50 mm (3/4") 55 mm (1").

Code	Size	Box	Carton	Cat.
01280500	3/4"	1	10	04.01
01280600	1"	1	10	04.01

Series 129

Pair of plastic brackets to fix Single manifolds in plastic boxes (for boxes code 86.XX.00).

Bracket centre distance 114,5 mm.

Code	Size	Box	Carton	Cat.
01290500	3/4"	1	10	04.01
01290600	1"	1	10	04.01

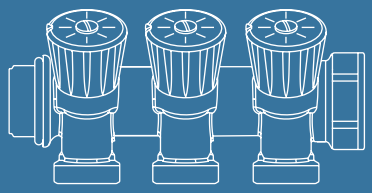

01.
HYDROTHERMAL
DISTRIBUTION

05.DHW DISTRIBUTION

05.01 DHW DISTRIBUTION

Manifolds for DHW systems
Plastic housing boxes
Thermostatic mixers

05.01 DHW DISTRIBUTION | MANIFOLDS FOR DHW SYSTEMS

Series 171

Single modular manifold with in-line connections, used for domestic water circuit distribution. Unilateral junctions complete with built-in micrometric shut-off valves.

Nickel-plated brass body.
Elastomer seals.
Shockproof ABS handwheel.
RBM standard threaded M junction connections, centre distance 37 mm, for copper, polyethylene and multilayer pipe fittings, or M G1/2" (according to version).
In-line threaded connections MF UNI-EN-ISO 228.

- Max operating temperature 95 °C
- Max operating pressure 10 Bar

CERTIFICATIONS:
DHW

Modular manifold, Standard RBM connections

Code	Size	Ways	Box	Carton	Cat.
01710500	G 3/4"	2	5	5	05.01
01720500	G 3/4"	3	5	5	05.01
13300500	G 3/4"	4	5	5	05.01
01710600	G 1"	2	5	5	05.01
01720600	G 1"	3	5	5	05.01
13300600	G 1"	4	5	5	05.01

Standard RBM thread W24.5x19F junction side

Modular domestic water manifold, G 1/2" connections

Code	Size	Ways	Box	Carton	Cat.
27930550	G 3/4"	2	5	5	05.01
27940550	G 3/4"	3	5	5	05.01
27950550	G 3/4"	4	5	5	05.01
27930650	G 1"	2	5	5	05.01
27940650	G 1"	3	5	5	05.01
27950650	G 1"	4	5	5	05.01

Thread M G 1/2" junctions side

Use fittings with RBM standard thread or G 1/2" thread series 2796 (see page 117) for pipe connection, according to versions.
O.R. seal manifold.

MODULAR MANIFOLD FOR SANITARY SYSTEMS

RBM modular manifolds make it possible to implement compo- sitions suitable for the control and distribution of sanitary water.

They are equipped with shut-off valves and indica- tion of the utility supplied on each junction way.

PRACTICAL INSTALLATION:

When assembling several elements one to another, the connec- tions of the junctions are always per- fectly aligned.

PRODUCTION RANGE:

RBM modular manifolds are made in sizes 3/4" and 1" with male and female connections at the ends. They are available in versions with 2, 3 and 4 distribution ways.

The junction connections are available with two dif- ferent threads: standard RBM W24.5x19F or gas M G1/2".

To complete the range, plastic housing boxes and relative fixing brackets are available to make instal- lation of the manifolds easy and quick.

- Manifold with o-ring seat;
- Micrometric shut-off valves on each junction;
- Indication of utility supplied on each junction.

Series 181

Concealed connection elbow for DHW and heating systems.

Internal elbow in OT58, threaded M standard RBM (pipe side) and F 1/2" UNI-EN-ISO 228 (cock side). Shockproof PP container.

- Max temperature 90 °C
- Maximum operating pressure 1000 kPa

CERTIFICATIONS:
DHW

Code	Figure	Size	Box	Carton	Cat.
01810020*	1	RBM 1/2"- - F	1	20	05.01
01810030**	2	RBM 1/2"- - F	1	20	05.01

*For flush wall mounting
**For flush tile mounting
Standard RBM thread (W24.5x19F) pipe side

Series 186

Connection elbow for double outlet DHW systems

Internal elbow in OT58 threaded F 1/2" UNI-EN-ISO 228 (cock side) and double connection threaded M standard RBM (pipe side). Shockproof PP container.

- Max temperature 90 °C
- Maximum operating pressure 1000 kPa

CERTIFICATIONS:
DHW

Code	Size	Box	Carton	Cat.
01860000	RBM 1/2"- - F	1	20	05.01

Standard RBM thread (W24.5x19F) pipe side

Series 182

Concealed connection elbow for DHW and heating systems.

Internal elbow in OT58, threaded M standard RBM (pipe side) and F 1/2" UNI-EN-ISO 228 (cock side). Shockproof PP container.

- Max temperature 90 °C
- Maximum operating pressure 1000 kPa

CERTIFICATIONS:
DHW

Code	Figure	Size	Model	Box	Carton	Cat.
01820000	1	-	Fig. 1	10	-	05.01
01830000	2	1/2"	Fig. 2	20	600	05.01

*For flush wall mounting
**For flush tile mounting
Standard RBM thread (W24.5x19F) pipe side

Series 185

Concealed connection elbow for DHW and heating systems.

Internal elbow in OT58, threaded M standard RBM (pipe side) and F 1/2" UNI-EN-ISO 228 (cock side). Shockproof PP container.

- Max temperature 90 °C
- Maximum operating pressure 1000 kPa

CERTIFICATIONS:
DHW

Code	Size	Model	Box	Carton	Cat.
01850020	RBM 1/2"- - F	Plastic bracket	4	16	05.01

*For flush wall mounting
**For flush tile mounting
Standard RBM thread (W24.5x19F) pipe side

Series 3828

Sanitary manifold box.

Plastic box.
Removable cover included.
Paintable cover.
Maximum adjustable height 100 mm
Can also be inserted in partition walls with 8 cm boxed structures, plastered on both sides.

BIM

Code	LxH (mm)	Box	Carton	Cat.
38282900	290x270	1	1	05.01
38283900	390x270	1	1	05.01
38284900	490x270	1	1	05.01

Bottom depth 80 ÷ 92 mm

Brackets for fixing manifolds are supplied separately.
Removable frame 12 mm.

Series 1942

Pair of plastic brackets to fix simple modular manifolds in plastic boxes (for 3828 series boxes).

Code	Size	Box	Carton	Cat.
19420500	3/4"	1	20	05.01
19420600	1"	1	20	05.01

BIBOX

Series 3827

Sanitary manifold box, patented reversible, classic and flush-wall installation.

Reversible and telescopic frame.
Suitable for classic installations with external cover plate or flush with the wall.
Can also be inserted in partition walls with 8 cm boxed structures, plastered on both sides. Can be inserted in plasterboard with 75 mm or longer uprights.

PATENTED

Code	LxH (mm)	Box	Carton	Cat.
38272900	290x270	1	1	05.01
38273900	390x270	1	1	05.01
38274900	490x270	1	1	05.01

Bottom depth 80 ÷ 92 mm
Frame adjustment stroke 35 mm

Presence of 3 guides for the manifold support to be secured.
On all sides there are removable inserts for the pipes to be passed.
Threads M6 pitch 1 to adjust the telescopic frame.
On the external part of the bottom there is a grid to facilitate adhesion of the mortar in masonry works.
Pre-holes for suitable dowels or screws to be used to be secured in the plasterboard or accessory use.
Removable frame (12 mm).
Use Series 1942 brackets for fixing manifolds supplied separately.

BiBox

Reversible housing box for manifolds for sanitary systems.

Reversible housing box for sanitary system manifolds.
Suitable for **flush wall installations** or with **external door.** Can be inserted in partition walls with 80 mm boxed structures or in plasterboard with 75 mm uprights.

- Suitable for plasterboard and masonry walls
- **Reversible cover:** flush wall installation or with external door
- **Universal:** for all types of manifolds
- **Adjustable depth**
- **Lightweight structure** that can be installed using dowels and self-tapping screws
- **Paintable** cover

MODULAR SANITARY MANIFOLD COUPLING / HOUSING-BOXES

Box 290x470	Box 390x470	Box 490x470

6-way

Hot

Cold

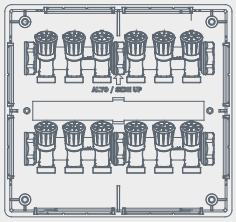

8-way

Hot

Cold

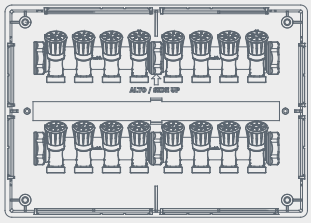

10-way

Hot

Cold

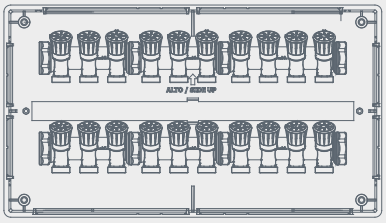

4-way + ball valve

Hot

Cold

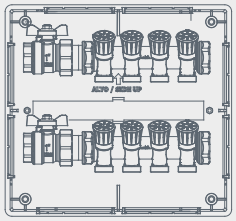

6-way + ball valve

Hot

Cold

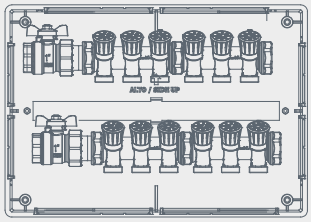

8-way + ball valve

Hot

Cold

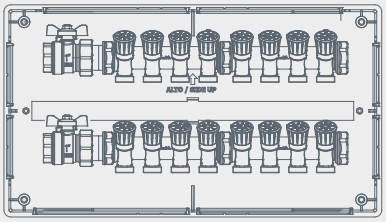

4-way + damper

Hot

Cold

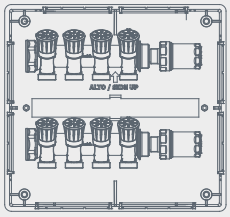

7-way + damper

Hot

Cold

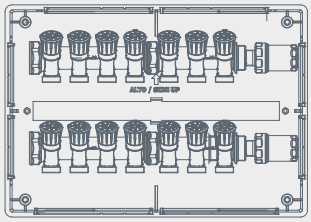

9-way + damper

Hot

Cold

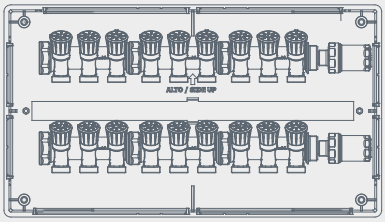

3-way + 90° angle ball valve

Hot

Cold

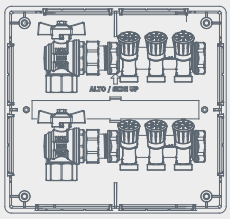

5-way + 90° angle ball valve

Hot

Cold

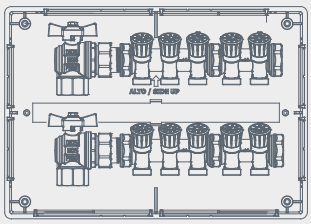

8-way + 90° angle ball valve

Hot

Cold

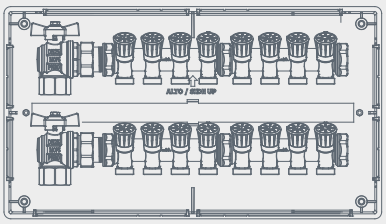

Valve + 2-way + damper

Hot

Cold

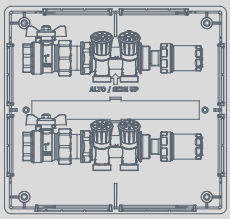

Valve + 5-way + damper

Hot

Cold

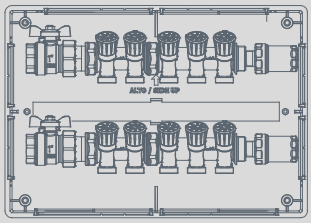

Valve + 7-way + damper

Hot

Cold

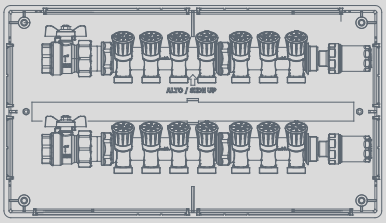

S4 + S3

Cold

Hot

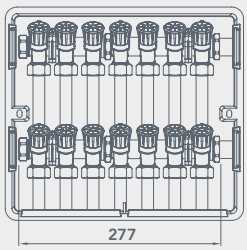

S5 + ball valves

Cold

Hot

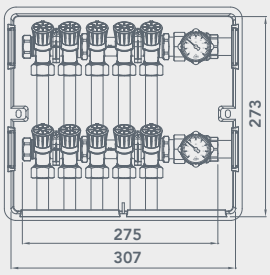

Series 2133

Adjustable T-pattern thermostatic mixing valve for sanitary systems.

Chrome-plated body in anti-dezincification alloy (size 1/2" and 3/4").
Chrome-plated brass body (size 1" - 1"1/4 - 1"1/2 - 2").
Stainless steel springs.
Elastomer seals.
Threaded connections UNI-EN-ISO 228.

- Max dynamic pressure 5 Bar
- Max static pressure 10 Bar
- Max inlet temperature 85 °C
- Setting range +30 ÷ +65 °C
- Precision ± 2 °C

CERTIFICATIONS:
DHW

Code	Size	Box	Carton	Cat.
21330400	1/2"	1	10	05.01
21330550	3/4"	1	10	05.01
21330600	1"	1	10	05.01
21330700	1"1/4	1	8	05.01
21330800	1"1/2	1	-	05.01
21330900	2"	1	-	05.01

Non-removable cartridge.

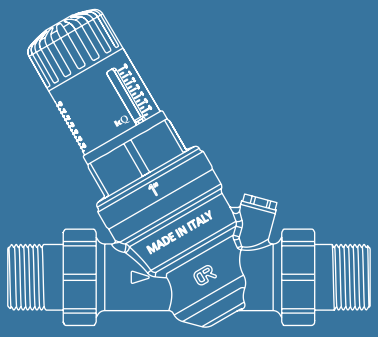

01.
HYDROTHERMAL
DISTRIBUTION

06. PRESSURE REDUCTION

06.01 PRESSURE REDUCTION

Diaphragm pressure reducing valves

Piston-operated pressure reducing valves

Water hammer damper

PRESSURE REDUCING VALVES

RBM pressure reducing valves are used in plumbing, heating and sanitary systems, mainly **to reduce pressure between the distribution network and the utility junctions**. The RBM range includes diaphragm and piston operated pressure reducing valves.

DIAPHRAGM PRESSURE REDUCING VALVES

Rinox
Series 51.A
PN 40
Sizes:
1/2" - 3/4" - 1"
1"1/4 - 1"1/2 - 2"

Rinox
Series 51.B
PN 40
Sizes:
1/2" - 3/4" - 1"
1"1/4 - 1"1/2 - 2"
2"1/2 - 3" - 4"

Rinox
Series 51.D
PN 40
Sizes:
1/2" - 3/4" - 1"
1"1/4 - 1"1/2 - 2"

Rinox Plus M
Series 2848
PN 25
Sizes:
1/2" - 3/4" - 1"
1"1/4 - 1"1/2 - 2"

Rinox Plus Smart M
Series 2909
PN 25
Sizes:
1/2" - 3/4" - 1" - 1"1/4
1"1/2 - 2"

PISTON-OPERATED PRESSURE REDUCING VALVES

Rinox Due
Series 87.A
PN 25
Sizes:
3/8" - 1/2" - 3/4"

Rinox Due
Series 87.B
PN 25
Sizes:
3/8" - 1/2" - 3/4" - 1"
1"1/4 1"1/2 - 2"

Rinox Due
Series 288
PN 25
Sizes:
1/2" - 3/4"

RinoxDue Silver
ACT treatment
Series 4054
PN 25
Sizes:
3/8" - ½" - ¾" - 1"
1" ¼ - 1" ½ - 2"

Ris
Series 1139.A
PN 16
Sizes:
G 3/8" - G 1/2" - G 3/4"

06.01 PRESSURE REDUCTION | DIAPHRAGM PRESSURE REDUCING VALVES

RINOX
Series 51.A

Adjustable compensated pressure reducing valve with FF - PN40 connections, diaphragm operated, double seat, made of stainless steel, with anti-water hammer function. Suitable for water conveyance.

Nickel-plated brass body.
Stainless steel AISI 303.
Elastomer seals.
Threaded connections FF UNI-EN-ISO 228.
Pressure gauge holder connection F 1/4".

- Nominal pressure 40 Bar
- Max upstream pressure 25 Bar
- Max operating temperature 80 °C

CERTIFICATIONS:
DHW

BIM

Code	Size	Model	Box	Carton	Cat.
00510495	G 1/2"	Rinox	1	6	06.01
00510595	G 3/4"	Rinox	1	6	06.01
00510695	G 1"	Rinox	1	6	06.01
00510795	G 1"1/4	Rinox	1	4	06.01
00510895	G 1"1/2	Rinox	1	1	06.01
00510995	G 2"	Rinox	1	1	06.01

outlet adjustment 6 ÷ 10 Bar

First reduction pressure reducing valve: this reduces upstream pressures near a value of 25 bar in compliance with the reduction ratio recommended by RBM.

In order to avoid cavitation phenomena, and therefore excessive noise of the component, it is recommended to avoid having the ratio between the upstream maximum pressure and the downstream adjustment pressure of the regulator exceed a value of 2.5.

RINOX
Series 51.B

Adjustable compensated pressure reducing valve with FF - PN40 connections, diaphragm operated, double seat, made of stainless steel, with anti-water hammer function. Suitable for water conveyance.

Nickel-plated brass body.
Stainless steel AISI 303.
Elastomer seals.
Threaded connections FF UNI-EN-ISO 228.
Pressure gauge holder connection F 1/4".

- Nominal pressure 40 Bar
- Max upstream pressure 25 Bar
- Max upstream pressure in compliance with standard NF 16 Bar
- Max operating temperature 80 °C
- Default presetting 3 Bar (only models with*)

CERTIFICATIONS:
DHW

NF

BIM

Code	Size	Model	Box	Carton	Cat.
00510470	G 1/2"	Rinox *	1	6	06.01
00510570	G 3/4"	Rinox *	1	6	06.01
00510670	G 1"	Rinox *	1	6	06.01
00510770	G 1"1/4	Rinox **	1	4	06.01
00510870	G 1"1/2	Rinox **	1	1	06.01
00510970	G 2"	Rinox **	1	1	06.01
00511070	G 2"1/2	Rinox **	1	1	06.01
00511170	G 3"	Rinox **	1	1	06.01
00511370	G 4"	Rinox **	1	1	06.01

* outlet adjustment 0.8 ÷ 5.5 Bar - available outlet adjustment 0.8 ÷ 7 Bar (ordering code 51.0X.80).
** outlet adjustment 0.8 ÷ 7 Bar.
NF certified for ½" and ¾" sizes only

Pretarate (*) with anti-waterhammer action.

RINOX

Series 51.D

Adjustable compensated pressure reducing valve with MM union connections - PN40 , stainless steel two-seat diaphragm operation, water hammer action. Suitable for conveying water.

Nickel-plated brass body.
Stainless steel AISI 303.
Elastomer seals.
Threaded connections MM UNI-EN-ISO 228.
Pressure gauge holder connection F 1/4".

- Nominal pressure 40 Bar
- Max upstream pressure 25 Bar
- Max upstream pressure in compliance with standard NF 16 Bar
- Max operating temperature 80 °C
- Default presetting 3 Bar (only models with*)

CERTIFICATIONS:
DHW

Code	Size	Model	Box	Carton	Cat.
00510410	G 1/2"	Rinox *	1	6	06.01
00510510	G 3/4"	Rinox *	1	6	06.01
00510610	G 1"	Rinox *	1	6	06.01
00510710	G 1"1/4	Rinox **	1	4	06.01
00510810	G 1"1/2	Rinox **	1	1	06.01
00510910	G 2"	Rinox **	1	1	06.01

* outlet adjustment 0.8 ÷ 5.5 Bar.
** outlet adjustment 0.8 ÷ 7 Bar.
NF certified for ½" and ¾" sizes only

Pre-calibrated(*) with anti-water hammer function.

RINOX

Compensated pressure reducing valves with double stainless steel seat. Diaphragm operated.

RBM Rinox pressure reducing valves are used in plumbing, heating and sanitary systems, es- pecially to reduce pressure between the distri- bution network and the junctions of the main utility.

The structural features and diaphragm opera- tion make **RBM Rinox** the ideal product to use in cir- cuits in which upstream pressure can be subject to strong oscillations (water hammers).

The compensation chamber in the pressure re- ducing valve also prevents these fluctuations from affecting the calibration pressure, keeping it stable.

Compliant with EN 1567 and Approved **NF** (size 1/2" and 3/4"). Conformity **ACS.**

- Moulded diaphragm (enhanced sensitivity - longer duration - greatly reduced friction)
- Stainless steel double seal seat (protects moving parts - guides movement - enhanced adjustment sensitivity - not touched by scales)
- PN 40 bar: ideal for installations in high rising buildings
- Resistant to high temperatures: max operating temperature 80°C
- Compensated: pressure variations upstream are compensated, leaving the outlet calibration constant
- Wide application range
- Can be installed in any position: vertical, horizontal, diagonal or facing downwards

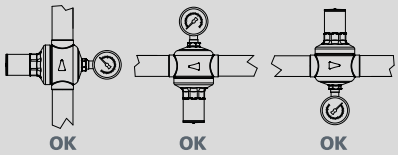

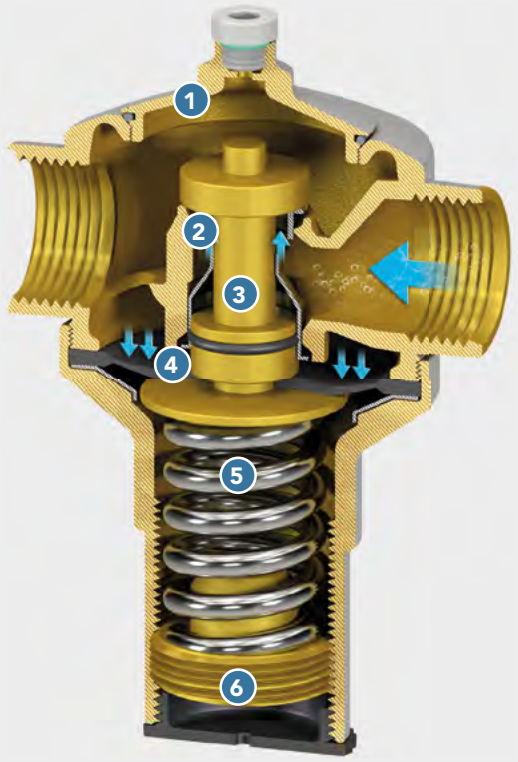

1. Pressure gauge holder connection
2. Stainless steel double seal seat
3. Compensation chamber
4. Diaphragm in moulded rubber
5. Adjustment spring
6. Calibration ring nut/screw

Representative section of the pressure reducing valve in the **CLOSED position.**

DIAPHRAGM PRESSURE REDUCING VALVES

Manufactured from top-quality materials, the **RBM Rinox** double-seated pressure reducing valve with diaphragm actuation is particularly suitable for reducing pressure between the distribution network and the main utility branch (from the urban network, power station supply, etc.).

RBM Rinox allows the transit of high flow rates with low pressure drops, absorbing water hammers from the external network thanks to the dampening action of the internal diaphragm. The reducing valve supports a nominal pressure of 40 bar*, allowing downstream pressure regulation between 0.8 and 10 bar (depending on the models). To achieve quiet operation and avoid premature wear of internal components, it is advisable to choose the reducing valve diameter so that the fluid velocity is within the following values:

- for water V= 0.7-1.5 m/s (residential use)
  V = 1-3.5 m/s (industrial use)

To avoid cavitation phenomena, and thus excessive component noise, the ratio between the maximum upstream pressure and the regulating pressure downstream of the regulator must not exceed 2.5.
For example, for an end-user supply setting of no more than 3 bar, the pressure upstream of the reducing valve must remain within 7.5 bar.
For higher values, it is advisable to insert a second reducing valve in series with the first, in order to spread the total pressure difference over two reduction jumps.

*** 25 bar for the RBM RinoxPlus M model**

Pressure stopped at the adjustment value of 3 bar

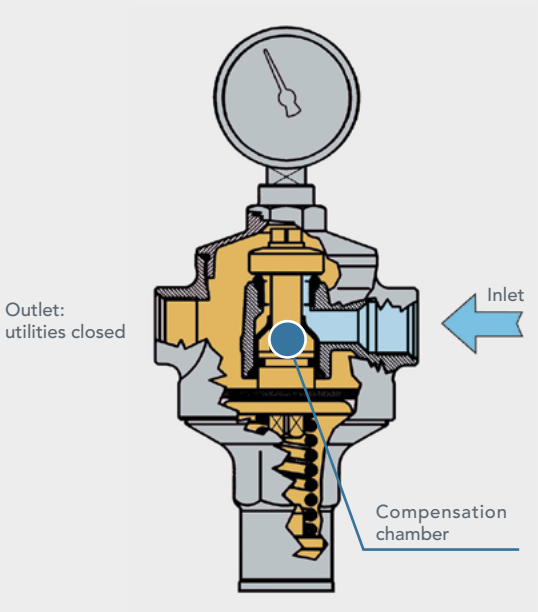

When the utilities to be served are closed, the downstream pressure increases by pushing the piston of the reducer to the bottom. In this way, the shutter closes the passage section of the pressure reducing valve, keeping the pressure constant at the set value set on the spring. The minimal pressure difference straddling the shutter allows it to close perfectly.

Pressure: P<3 bar

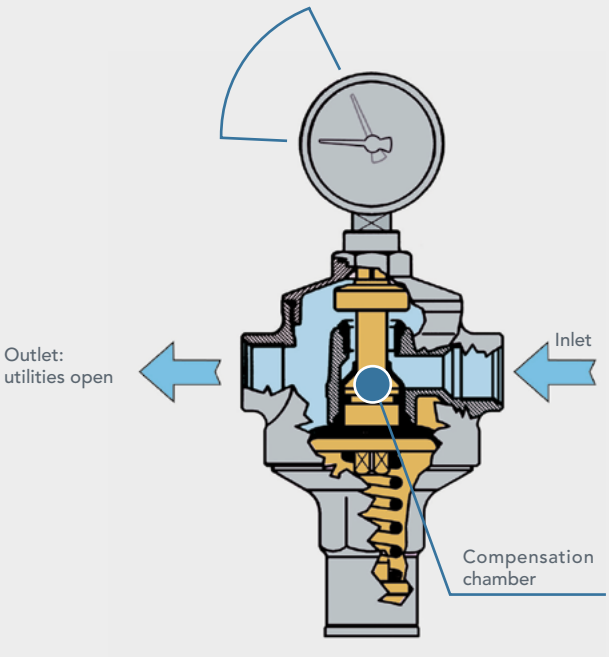

With the opening of the downstream utilities, the pressure exerted on the piston is less in favour of the force exerted by the spring on the shutter allowing its opening with the consequent fluid passage. The higher the demand for water from the utility network, the lower the pressure on the piston and the greater the water flow.

06.01 PRESSURE REDUCTION | DIAPHRAGM PRESSURE REDUCING VALVES

RINOX PLUS SMART M

Series 2909

Adjustable pressure reducing valve, diaphragm operated, with measuring knob.

The internal cartridge can be easily inspected and extracted; provided with extractable filter.

Suitable for water channeling.

Anti-dezincification brass body (CR).
Elastomer seals.
Threaded connections MM UNI-EN-ISO 228.
Pressure gauge holder connection F 1/4".

- Nominal pressure 25 bar (cold water 40 °C) / 16 bar (hot water 80 °C) *
- Upstream pressure 25 bar (cold water 40 °C) / 16 bar (hot water 80 °C)
- Adjustable downstream pressure 0.8 ÷ 7 Bar
- Max operating temperature 80 °C
- Filtering grade 800 µm
- Default presetting 3 Bar

CERTIFICATIONS:
DHW

kiwa UNI
IT-TD-Ki0413
KIP-087598

WRAS APPROVED PRODUCT

BIM

Code	Size	Model	Box	Carton	Cat.
29090400	G 1/2"	RinoxPlusSmart M	1	6	06.01
29090500	G 3/4"	RinoxPlusSmart M	1	6	06.01
29090600	G 1"	RinoxPlusSmart M	1	6	06.01
29090700	G 1"1/4	RinoxPlusSmart M	1	4	06.01
29090800	G 1"1/2	RinoxPlusSmart M	1	4	06.01
29090900	G 2"	RinoxPlusSmart M	1	4	06.01

Pre-calibrated.
Replaceable cartridge. See spare parts pricelist.
Compact.
Complete with calibration knob.

RINOX PLUS M

Series 2848

Adjustable pressure reducing valve, diaphragm operated. The internal cartridge can be easily inspected and extracted; provided with extractable filter. Suitable for water channeling.

Anti-dezincification brass body (CR).
Elastomer seals.
Threaded connections FF UNI-EN-ISO 228.
Pressure gauge holder connection F 1/4".

- Nominal pressure 25 bar (cold water 40 °C) / 16 bar (hot water 80 °C) *
- Upstream pressure 25 bar (cold water 40 °C) / 16 bar (hot water 80 °C)
- Adjustable downstream pressure 0.8 ÷ 7 Bar
- Max operating temperature 80 °C
- Filtering grade 800 µm
- Default presetting 3 Bar

CERTIFICATIONS:
DHW

kiwa UNI
IT-TD-Ki0413
KIP-087598

WRAS APPROVED PRODUCT

WRAS certification only for codes 2848.04.00 and 2848.05.00

BIM

Code	Size	Model	Box	Carton	Cat.
28480400	G 1/2"	RinoxPlus M	1	10	06.01
28480500	G 3/4"	RinoxPlus M	1	10	06.01
28480600	G 1"	RinoxPlus M	1	4	06.01
28480700	G 1"1/4	RinoxPlus M	1	4	06.01
28480800	G 1"1/2	RinoxPlus M	1	4	06.01
28480900	G 2"	RinoxPlus M	1	4	06.01

Pre-calibrated.
Replaceable cartridge. See spare parts pricelist.
Compact.

RINOXPLUS M & RINOXPLUS SMART M

Diaphragm pressure reducing valves with inspectionable internal cartridge and removable filter.

RINOXPLUS SMART M

RINOXPLUS M

The **RBM RinoxPlus M** are diaphragm operat- ed pressure reducing valves with inspectionable and easily interchangeable internal cartridge, complete with removable filter.

The cartridge is a compensated seat: upstream pressure variations do not affect the adjustment of the downstream pressure.

In addition, the **RinoxPlusSmart M** pressure reducing valve is equipped with a graduated knob to carry out the calibration, without the use of a pressure gauge and tools.

SPARE PARTS AND MAINTENANCE INTERVENTIONS

Before carrying out any maintenance oper- ation, shut off the pressure reducing valve.

For the replacement, control and cleaning of the reducer, simply unscrew the cap and remove the internal cartridge, which contains all the mobile parts and consumables.

When replacing the cartridge the reducer goes back to being like new.

It is possible to remove the filter from the cartridge to carry out cleaning or replacement.

During these operations, the body remains installed on the system.

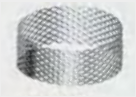

- Diaphragm pressure reducing valve
- Inspectionable internal cartridge and filter
- Body made of brass anti- dezincification (CR)
- Out pressure calibration knob
- Cartridge compensated

1. Polymer cap
2. Diaphragm made of elastomer
3. Additional sealing o-ring made of elastomer
4. Cartridge
5. Filter (800 micron)
6. Body made brass anti-dezincification (CR)

RINOX DUE

Series 87.A

Adjustable pressure reducing valve with FF - PN25 connections, with single stainless steel seat and compensated piston operation. Suitable for water conveyance.

Nickel-plated brass body.
Stainless steel AISI 303 seat seals.
Elastomer seals.
Threaded connections FF UNI-EN-ISO 228.
F1/4" pressure gauge holder connection.

- Nominal pressure 25 Bar
- Max upstream pressure 25 Bar
- Adjustable downstream pressure 0.5 ÷ 4 Bar (with inlet pressure of 8 Bar)
- Max operating temperature 80 °C
- Default presetting 3 Bar

CERTIFICATIONS:
DHW

BIM

Code	Size	Model	Box	Carton	Cat.
00870380	G 3/8"	RinoxDue	1	20	06.01
00870480	G 1/2"	RinoxDue	1	20	06.01
00870580	G 3/4"	RinoxDue	1	20	06.01

Pre-calibrated.

RINOX DUE

Series 87.B

Adjustable pressure reducing valve, with single stainless steel seat and compensated piston operation. Suitable for water conveyance.

Nickel-plated brass body.
Stainless steel AISI 303 seat seals.
Elastomer seals.
Threaded connections FF UNI-EN-ISO 228.
F1/4" pressure gauge holder connection.

- Nominal pressure 25 Bar
- Max upstream pressure 25 Bar
- Adjustable downstream pressure 0.5 ÷ 7 Bar (with inlet pressure of 8 Bar)
- Max operating temperature 80 °C

CERTIFICATIONS:
DHW

BIM

Rinox Due. Pressure reducing valve with FF connections - pn 25

Code	Size	Model	Box	Carton	Cat.
00870370	G 3/8"	RinoxDue	1	20	06.01
00870470	G 1/2"	RinoxDue	1	20	06.01
00870570	G 3/4"	RinoxDue	1	20	06.01
00870670	G 1"	RinoxDue	1	6	06.01
00870770	G 1"1/4	RinoxDue	1	6	06.01
00870870	G 1"1/2	RinoxDue	1	1	06.01
00870970	G 2"	RinoxDue	1	1	06.01

RBM ACT treatment. Definition: electro-deposited ternary alloy, very stable; it replaces the classical electrolytic nickel-chromium. It complies with the limitations imposed by the international regulations in terms of water intended for human consumption.
Features: Great corrosion resistance, both in acidic and alkaline environments and anti-magnetic properties that ensure great dezincification resistance.
It slows down the production of limestone.
It complies with potability prerequisites.

RINOX DUE SILVER

Series 4054

Adjustable pressure reducing valve with FF - PN25 connections, with single stainless steel seat and compensated piston operation. RBM Act treatment. Suitable for water conveyance.

Nickel-plated brass body.
Stainless steel AISI 303 seat seals.
Elastomer seals.
Threaded connections FF UNI-EN-ISO 228.
F1/4" pressure gauge holder connection.

- Nominal pressure 25 bar
- Max upstream pressure 25 bar
- Adjustable downstream pressure 0.5 ÷ 4 bar (code xxxxxx10) or 7 bar (code xxxxxx60), with inlet pressure of 8 bar
- Max operating temperature 80 °C

CERTIFICATIONS:
DHW

BIM

Rinox Due Silver. Pressure reducing valve with RBM ACT treatment (Fig. 1)

Code	Size	Model	Box	Carton	Cat.
40540310	G 3/8"	RinoxDue Silver	1	20	06.01
40540410	G 1/2"	RinoxDue Silver	1	20	06.01
40540510	G 3/4"	RinoxDue Silver	1	20	06.01

Rinox Due Silver. Pressure reducing valve with RBM ACT treatment (Fig. 2)

Code	Size	Model	Box	Carton	Cat.
40540460	G 1/2"	RinoxDue Silver	1	20	06.01
40540560	G 3/4"	RinoxDue Silver	1	20	06.01
40540660	G 1"	RinoxDue Silver	1	6	06.01
40540760	G 1"1/4	RinoxDue Silver	1	6	06.01
40540860	G 1"1/2	RinoxDue Silver	1	1	06.01
40540960	G 2"	RinoxDue Silver	1	1	06.01

Pre-calibrated.
RBM ACT treatment. Definition: electro-deposited ternary alloy, very stable; it replaces the classical electrolytic nickel-chromium. It complies with the limitations imposed by the international regulations in terms of water intended for human consumption.
Features: Great corrosion resistance, both in acidic and alkaline environments and anti-magnetic properties that ensure great dezincification resistance.
It slows down the production of limestone.
It complies with potability prerequisites.

RINOXDUE

Series 288

Adjustable pressure reducing valve with MM - PN25 connections, with single stainless steel seat and compensated piston operation. Suitable for water conveyance.

Nickel-plated brass body.
Stainless steel AISI 303 seat seals.
Elastomer seals.
Threaded connections MF UNI-EN-ISO 228.
F1/4" pressure gauge holder connection.

- Nominal pressure 25 Bar
- Max upstream pressure 25 Bar
- Adjustable downstream pressure 0.5 ÷ 4 Bar (with inlet pressure of 8 Bar)
- Max operating temperature 80 °C
- Default presetting 3 Bar

CERTIFICATIONS:

BIM

Code	Size	Model	Box	Carton	Cat.
02880480	G 1/2"	RinoxDue	1	10	06.01
02880580	G 3/4"	RinoxDue	1	10	06.01

Pre-calibrated.

06.01 PRESSURE REDUCTION | PISTON-OPERATED PRESSURE REDUCING VALVES

RIS
Series 1139.A

Adjustable pressure reducing valve with FF connections with gauge holder - PN16, single seat, compensated piston operation. Suitable for conveying water.

Nickel-plated brass body.
Elastomer seals.
Threaded connections FF UNI-EN-ISO 228.
F1/4" pressure gauge holder connection.

- Nominal pressure 16 Bar
- Max upstream pressure 16 Bar
- Adjustable downstream pressure 0.5 ÷ 4 Bar (with inlet pressure of 8 Bar)
- Max operating temperature 80 °C
- Default presetting 3 Bar

CERTIFICATIONS:
DHW

BIM

Code	Size	Model	Box	Carton	Cat.
11390300	G 3/8"	Ris	1	30	06.01
11390400	G 1/2"	Ris	1	30	06.01
11390500	G 3/4"	Ris	1	20	06.01

Pre-calibrated.
Compact.

RIS
Series 1139.B

Adjustable pressure reducing valve, single seat, compensated piston operation. Suitable for water conveyance.

Nickel-plated brass body.
Elastomer seals.
Threaded connections FF UNI-EN-ISO 228.

- Nominal pressure 16 Bar
- Max upstream pressure 16 Bar
- Adjustable downstream pressure 0.5 ÷ 4 Bar (with inlet pressure of 8 Bar)
- Max operating temperature 80 °C
- Default presetting 3 Bar

CERTIFICATIONS:

BIM

Code	Size	Model	Box	Carton	Cat.
11390340	G 3/8"	Ris	1	30	06.01
11390440	G 1/2"	Ris	1	30	06.01
11390540	G 3/4"	Ris	1	30	06.01

Pre-calibrated.
Compact.
Version without pressure gauge holder connection.

RINOXDUE

Adjustable piston-operated pressure reducing valve

Single-seated compensated pressure reducing valve with piston actuation. Its small dimensions make it particularly suitable for the final reduction of pressure at the user (condominium distribution to floors, balancing fire-fighting hoses in multi-storey buildings fed by overpressure units, etc.).

Supports a nominal pressure of 25 bar* allowing downstream pressure regulation between 0.5 and 7.0 bar (depending on model).

To achieve quiet operation and avoid premature wear of internal components, it is advisable to choose the reducing valve diameter so that the fluid velocity is within the following values:

- for water

  V= 0,7÷1,5 m/s (residential use)

  V= 1÷3,5 m/s (industrial use)

To avoid cavitation phenomena, and thus excessive component noise, the ratio between the max. upstream pressure and the regulating pressure downstream of the regulator must not exceed 2.5.

For example, for an end-user supply setting of no more than 3 bar, the pressure upstream of the reducing valve must remain within 7.5 bar.

For higher values, it is advisable to insert a second reducing valve in series with the first, in order to spread the total pressure difference over two reduction jumps.

*** 16 bar for the RIS model**

Pressure stopped at the adjustment value of 3 bar

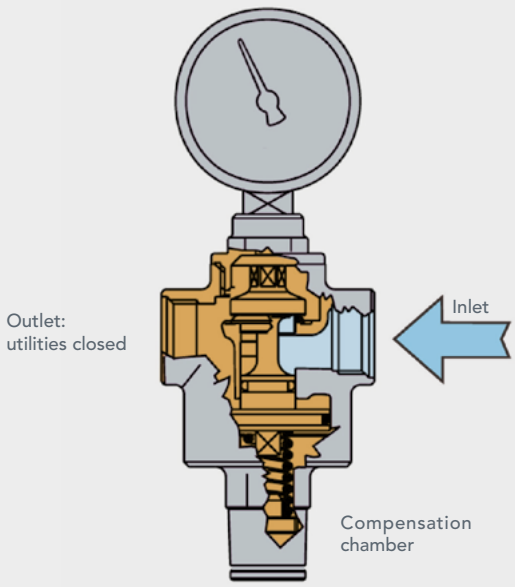

When the utilities to be served are closed, the downstream pressure increases by pushing the piston of the reducer to the bottom. In this way, the shutter closes the passage section of the pressure reducing valve, keeping the pressure constant at the set value set on the spring. The minimal pressure difference straddling the shutter allows it to close perfectly.

Pressure: P<3 bar

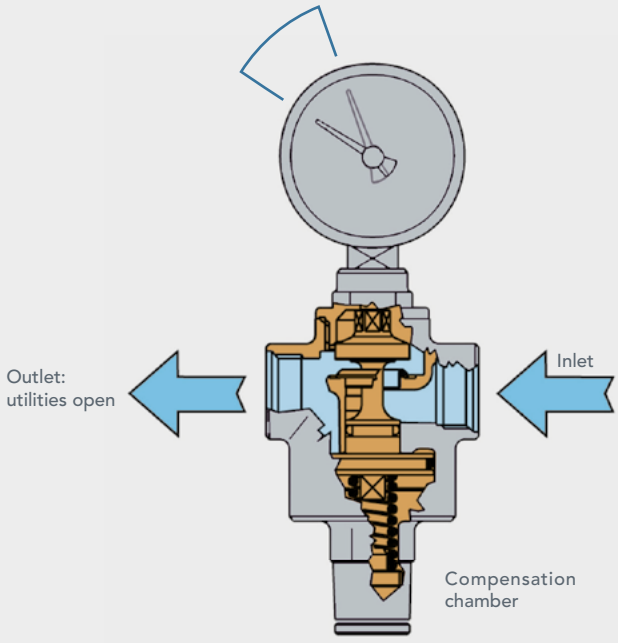

With the opening of the downstream utilities, the pressure exerted on the piston is less in favour of the force exerted by the spring on the shutter allowing its opening with the consequent fluid passage. The higher the demand for water from the utility network, the lower the pressure on the piston and the greater the water flow.

06.01 PRESSURE REDUCTION | WATER HAMMER ARRESTOR

Series 3072

Water hammer arrestor.

Brass body.
Steel spring.
Polymer piston.
Elastomer seals.
Threaded connection M UNI-EN-ISO 228.

- Max operating pressure 10 Bar
- Max operating temperature 90 °C
- Start of active intervention 3 Bar

CERTIFICATIONS:

Code	Size	Box	Carton	Cat.
30720400	1/2"	1	20	06.01

WATER HAMMER DAMPER

The water hammer damper **absorbs the overpressures generated in the system in the event of a sudden closing or opening of a circuit.** In this way, the fluid pressure is maintained at optimum operating values. Absorption of overpressure prevents damage to the components that make up the system and makes it possible to significantly reduce the noise that occurs in the pipes due to vibrations caused by the sudden closing of shut-off devices.

Water hammer damper
Series 3072

- Preserves the system components
- Prevents vibrations and noise in the system
- Reduced overall dimensions
- No maintenance

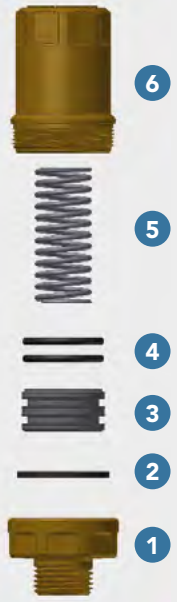

1. **Lower cap** in brass
2. **Flat gasket** in EPDM PEROX
3. **Piston** in POM polymer
4. **O.R. gasket** in EPDM PEROX
5. Stainless steel **spring**
6. **Spring-holding upper cap** in brass

OPERATING PRINCIPLE / POSSIBLE APPLICATIONS

The main function of the **water hammer damper is to absorb the overpressures that are generated in the system, in case of sudden closure or opening a circuit.**

The RBM **water hammer dampers** consist of a cylindrical body divided in two chambers (**open chamber and closed chamber**). The **closed chamber** is the cornerstone of the system, and is one that acts as a damper. It consists of a spring attached to a piston equipped with double O.R. sealing, all housed in an air chamber.

The **open chamber** is directly connected to the pipeline and is affected by changes in pressure in the hydraulic system. The overpressures generated in the system create a push on the spring, causing the change of pressure in the air contained in the closed chamber.

These opposing forces help absorb excess pressure.

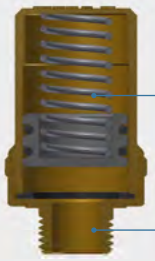

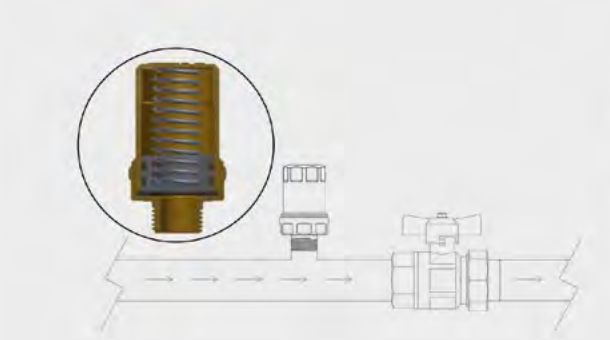

When the utilities are **open,** the pressure remains constant throughout the pipeline.

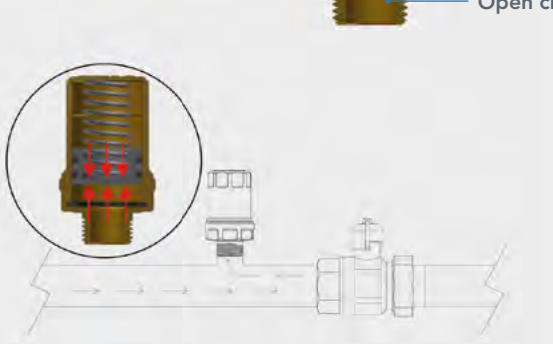

When the utilities are **closed**, the pressure increases along the whole pipeline, causing it to overpressure. The presence of the RBM anti-water hammer device absorbs the overpressure generated, avoiding the trigger of the water hammer phenomenon, preserving in this way all the components in the system.

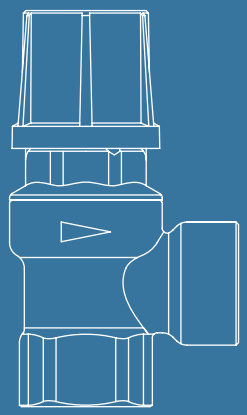

01.
HYDROTHERMAL
DISTRIBUTION

07. CONTROL AND SAFETY COMPONENTS

07.01 PRESSURE CONTROL AND SAFETY 68

Safety relief valves

By-pass valve

Filling units

07.03 FLUIDS SECURITY CONTROL 82

Leak detectors

07.04 TEMPERATURE CONTROL AND SAFETY 85

Anti-freeze valves

07.01 PRESSURE CONTROL AND SAFETY | SAFETY RELIEF VALVES

Series 351

Standard safety relief valve with controlled rise for fluids and neutral gases.

Brass body.
Stainless steel AISI 302 spring.
Elastomer obturator seal.
Elastomer diaphragm.
Threaded angle connections FF UNI-EN-ISO 228.

- Maximum admissible pressure PS 10 bar
- Max operating temperature 110 °C
- Orifice diameter 15mm
- Opening overpressure <20% Pt
- Closing discard pressure -20%
- Allowed fluid water-air (Gr.2)

CERTIFICATIONS:
PED | PESR

CE 0425 UKCA 1521

BIM

Standard safety relief valve 1/2" x 1/2" female connection

Code	Calibration (bar)	Max. Pwr. (kW)	Box	Carton	Cat.
03510410	1,50	48	1	50	07.01
03510420	2,00	55	1	50	07.01
03510430	2,50	68	1	50	07.01
03510440	3,00	75	1	50	07.01
03510450	3,50	83	1	50	07.01
03510460	4,00	96	1	50	07.01
03510470	4,50	103	1	50	07.01
03510480	5,00	109	1	50	07.01
03510490	6,00	128	1	50	07.01
03510471	7,00	148	1	50	07.01
03510481	8,00	166	1	50	07.01
03510411	10,00	181	1	50	07.01

Standard safety relief valve 3/4" x 3/4" female connection

Code	Calibration (bar)	Max. Pwr. (kW)	Box	Carton	Cat.
03510510	1,50	48	1	50	07.01
03510520	2,00	55	1	50	07.01
03510530	2,50	68	1	50	07.01
03510540	3,00	75	1	50	07.01
03510550	3,50	83	1	50	07.01
03510560	4,00	96	1	50	07.01
03510570	4,50	103	1	50	07.01
03510580	5,00	109	1	50	07.01
03510590	6,00	128	1	50	07.01
03510571	7,00	148	1	50	07.01
03510581	8,00	166	1	50	07.01
03510511	10,00	181	1	50	07.01

Series 352

Standard safety relief valve with controlled rise for fluids and neutral gases.

Brass body.
Stainless steel AISI 302 spring.
Elastomer obturator seal.
Elastomer diaphragm.
Threaded angle connections MF UNI-EN-ISO 228.

- Maximum admissible pressure PS 10 bar
- Max operating temperature 110 °C
- Orifice diameter 15mm
- Opening overpressure <20% Pt
- Closing discard pressure -20%
- Allowed fluid water-air (Gr.2)

CERTIFICATIONS:
PED | PESR

CE 0425 UK CA 1521

BIM

Standard safety relief valve male 1/2" x female 1/2" connection

Code	Calibration (bar)	Max. Pwr. (kW)	Box	Carton	Cat.
03520410	1,50	48	1	50	07.01
03520420	2,00	55	1	50	07.01
03520430	2,50	68	1	50	07.01
03520440	3,00	75	1	50	07.01
03520450	3,50	83	1	50	07.01
03520460	4,00	96	1	50	07.01
03520470	4,50	103	1	50	07.01
03520480	5,00	109	1	50	07.01
03520490	6,00	128	1	50	07.01
03520471	7,00	148	1	50	07.01
03520481	8,00	166	1	50	07.01
03520411	10,00	181	1	50	07.01

Standard safety relief valve male 1/2" x female 3/4" connection

Code	Calibration (bar)	Max. Pwr. (kW)	Box	Carton	Cat.
03520510	1,50	48	1	50	07.01
03520520	2,00	55	1	50	07.01
03520530	2,50	68	1	50	07.01
03520540	3,00	75	1	50	07.01
03520550	3,50	83	1	50	07.01
03520560	4,00	96	1	50	07.01
03520570	4,50	103	1	50	07.01
03520580	5,00	109	1	50	07.01
03520590	6,00	128	1	50	07.01
03520571	7,00	148	1	50	07.01
03520581	8,00	166	1	50	07.01
03520511	10,00	181	1	50	07.01

SAFETY RELIEF VALVES

Compliant with P.E.D. directive

RBM safety relief valves are devices that have to be installed on a hydraulic circuit, immediately downstream of the heat generator or on the hot water storage tanks, on the supply piping, in order to discharge any overpressure which could generate inside of them.

RBM safety relief valves are supplied with a pre-established calibration pressure value. When operating, if that pressure is reached, the valve opens (the force generated by the pressure overcomes the resistance exerted by the spring), allowing part of the fluid to be discharged thus lowering pressure inside the system.

STANDARD SAFETY RELIEF VALVE

Standard safety relief valves with controlled rising are used on heat generators with heat rated capacity higher than 35 kW and whenever the certified safety relief valve is not required. The standard safety relief valve is also available in the version with pressure gauge to read the pressure.

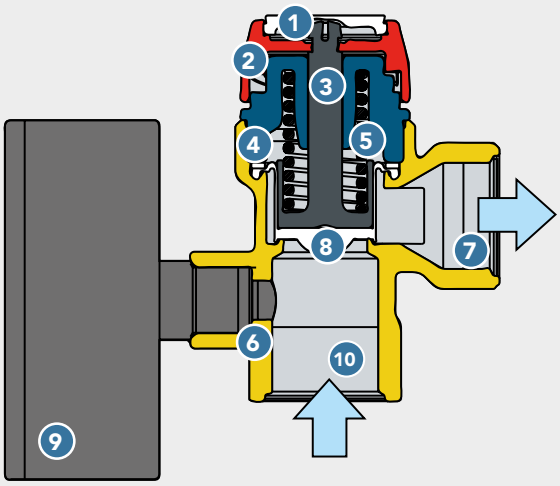

1. Indicator disk
2. ABS hand wheel
3. Polymer rod
4. Polymer cap
5. Internal spring in AISI 302 stainless steel
6. Brass body
7. Excessive pressure discharge connection
8. Shutter with elastomer seal
9. Pressure gauge
10. Heat generator connection

ACCESSORIES

DRAIN CHANNEL, CONSISTING OF FITTING ELBOW AND COLLECTION FUNNEL

Combined with the safety valves, the drain channel allows the discharged fluid to be directed in the desired direction.

07.01 PRESSURE CONTROL AND SAFETY | SAFETY RELIEF VALVES

Series 353

Standard safety relief valve with controlled rise for fluids and neutral gases, complete with dial pressure gauge.

Brass body.
Stainless steel AISI 302 spring.
Elastomer obturator seal.
Elastomer diaphragm.
Threaded angle connections FF UNI-EN-ISO 228.
F1/4" pressure gauge connection (UNI-EN-ISO 228).

- Maximum admissible pressure PS 10 bar
- Max operating temperature 110 °C
- Orifice diameter 15mm
- Opening overpressure <20% Pt
- Closing discard pressure -20%
- Pressure gauge scale 0 ÷ 4 Bar for valves < 4 Bar
- Pressure gauge scale 0 ÷ 10 bar for valves > 4 bar - Permitted fluid water-air (Un.2)

CERTIFICATIONS:
PED | PESR

CE 0425 UKCA 1521

BIM

Standard safety relief valve 1/2" x 1/2" female connection with pressure gauge

Code	Calibration (bar)	Max. Pwr. (kW)	Box	Carton	Cat.
03530410	1,50	48	1	48	07.01
03530420	2,00	55	1	48	07.01
03530430	2,50	68	1	48	07.01
03530440	3,00	75	1	48	07.01
03530450	3,50	83	1	48	07.01
03530460	4,00	96	1	48	07.01
03530470	4,50	103	1	48	07.01
03530480	5,00	109	1	48	07.01
03530490	6,00	128	1	48	07.01
03530471	7,00	148	1	48	07.01
03530481	8,00	166	1	48	07.01
03530411	10,00	181	1	48	07.01

Standard safety relief valve 3/4" x 3/4" female connection with pressure gauge

Code	Calibration (bar)	Max. Pwr. (kW)	Box	Carton	Cat.
03530510	1,50	48	1	48	07.01
03530520	2,00	55	1	48	07.01
03530530	2,50	68	1	48	07.01
03530540	3,00	75	1	48	07.01
03530550	3,50	83	1	48	07.01
03530560	4,00	96	1	48	07.01
03530570	4,50	103	1	48	07.01
03530580	5,00	109	1	48	07.01
03530590	6,00	128	1	48	07.01
03530571	7,00	148	1	48	07.01
03530581	8,00	166	1	48	07.01
03530511	10,00	181	1	48	07.01

07.01 PRESSURE CONTROL AND SAFETY | SAFETY RELIEF VALVES

Series 354

Ordinary safety valve M 1/2" x F 1/2" port with controlled lift for neutral fluids and gases, complete with dial gauge.

Brass body.
Stainless steel AISI 302 spring.
Elastomer obturator seal.
Elastomer diaphragm.
Threaded angle connections MF UNI-EN-ISO 228.
F1/4" pressure gauge connection (UNI-EN-ISO 228).

- Maximum admissible pressure PS 10 bar
- Max operating temperature 110 °C
- Orifice diameter 15mm
- Opening overpressure <20% Pt
- Closing discard pressure -20%
- Pressure gauge scale 0 ÷ 4 Bar for valves < 4 Bar
- Pressure gauge scale 0 ÷ 10 Bar for valves > 4 Bar
- Allowed fluid water-air (Gr.2)

CERTIFICATIONS:
PED | PESR

CE 0425 UK CA 1521

BIM

Code	Calibration (bar)	Max. Pwr. (kW)	Box	Carton	Cat.
03540410	1,50	48	1	48	07.01
03540420	2,00	55	1	48	07.01
03540430	2,50	68	1	48	07.01
03540440	3,00	75	1	48	07.01
03540450	3,50	83	1	48	07.01
03540470	4,50	103	1	48	07.01
03540480	5,00	109	1	48	07.01
03540490	6,00	128	1	48	07.01
03540471	7,00	148	1	48	07.01
03540481	8,00	166	1	48	07.01
03540411	10,00	181	1	48	07.01

07.01 PRESSURE CONTROL AND SAFETY | SAFETY RELIEF VALVES

Series 2201

T&P combined safety valve.

Brass body.
Stainless steel AISI 302 spring.
Elastomer obturator seal.
Elastomer diaphragm.
Threaded connections M UNI-EN-ISO 228.
Copper pipe end connection.

- Maximum admissible pressure PS 10 bar
- Temperature calibration 90+2 °C

CERTIFICATIONS:
PED | PESR

Code	Calibration (bar)	Max. Pwr. (kW)	Probe length	Box	Carton	Cat.
22010425	2,50	10	4"	1	50	07.01
22010430	3,00	10	4"	1	50	07.01
22010440	4,00	10	4"	1	50	07.01
22010460	6,00	10	4"	1	50	07.01
22010470	7,00	10	4"	1	50	07.01
22010410	10,00	10	4"	1	50	07.01
22011425	2,50	10	8"	1	40	07.01
22011430	3,00	10	8"	1	40	07.01
22011440	4,00	10	8"	1	40	07.01
22011460	6,00	10	8"	1	40	07.01
22011470	7,00	10	8"	1	40	07.01
22011410	10,00	10	8"	1	40	07.01

T&P combined safety valve 3/4" x Ø 22

Code	Calibration (bar)	Max. Pwr. (kW)	Probe length	Box	Carton	Cat.
25450530	3,00	25	4"	1	50	07.01
25450540	4,00	25	4"	1	50	07.01
25450560	6,00	25	4"	1	50	07.01
25450570	7,00	25	4"	1	50	07.01
25450510	10,00	25	4"	1	50	07.01
25451530	3,00	25	8"	1	40	07.01
25451540	4,00	25	8"	1	40	07.01
25451560	6,00	25	8"	1	40	07.01
25451570	7,00	25	8"	1	40	07.01
25451510	10,00	25	8"	1	40	07.01

Series 2809

Standard safety relief valve with controlled rise for water outlet; suitable for sanitary installations.

Brass body.
Stainless steel AISI 302 spring.
Elastomer obturator seal.
Elastomer diaphragm.
Threaded angle connections FF UNI-EN-ISO 228.

- Max admissible pressure PS 12 bar
- Max operating temperature 100 °C
- Opening overpressure +10%
- Closing discard pressure -20%
- Allowed fluid water-air (Gr.2)

CERTIFICATIONS:
PED

CE 0425

Standard 1/2" x 3/4" female connection safety valve

Code	Calibration (bar)	Max. Pwr. (kW)	Box	Carton	Cat.
28090460	4,00	75	1	45	07.01
28090490	6,00	75	1	45	07.01
28090481	8,00	75	1	45	07.01
28090411	10,00	75	1	45	07.01

Standard 3/4" x 1" female connection safety valve

Code	Calibration (bar)	Max. Pwr. (kW)	Box	Carton	Cat.
28090560	4,00	150	1	20	07.01
28090590	6,00	150	1	20	07.01
28090581	8,00	150	1	20	07.01
28090511	10,00	150	1	20	07.01

Standard female connection 1" x 1"1/4 safety valve

Code	Calibration (bar)	Max. Pwr. (kW)	Box	Carton	Cat.
28090660	4,00	250	1	20	07.01
28090690	6,00	250	1	20	07.01
28090681	8,00	250	1	20	07.01
28090611	10,00	250	1	20	07.01

Standard female connection 1"1/4 x 1"1/2 safety valve

Code	Calibration (bar)	Max. Pwr. (kW)	Box	Carton	Cat.
28090790	6,00	350	1	10	07.01
28090781	8,00	350	1	10	07.01
28090711	10,00	350	1	10	07.01

Safety valve for sanitary installations.

Series 811

Standard safety relief valve with controlled rise for water outlet; suitable for heating installations.

Brass body.
Stainless steel AISI 302 spring.
Elastomer obturator seal.
Elastomer diaphragm.
Threaded angle connections FF UNI-EN-ISO 228.

- Max admissible pressure PS 12 bar
- Max operating temperature 120 °C
- Opening overpressure +10%
- Closing discard pressure -20%
- Allowed fluid water-air (Gr.2)

CERTIFICATIONS:
PED

CE 0425

BIM

Standard 1/2" x 3/4" female connection safety valve

Code	Calibration (bar)	Max. Pwr. (kW)	Box	Carton	Cat.
08111430	2,50	50	1	45	07.01
08111440	3,00	50	1	45	07.01

Standard 3/4" x 1" female connection safety valve

Code	Calibration (bar)	Max. Pwr. (kW)	Box	Carton	Cat.
08111530	2,50	100	1	20	07.01

Standard female connection 1" x 1"1/4 safety valve

Code	Calibration (bar)	Max. Pwr. (kW)	Box	Carton	Cat.
08111630	2,50	200	1	20	07.01
08111640	3,00	200	1	20	07.01

Standard female connection 1"1/4 x 1"1/2 safety valve

Code	Calibration (bar)	Max. Pwr. (kW)	Box	Carton	Cat.
08111730	2,50	350	1	10	07.01
08111740	3,00	350	1	10	07.01

Safety valve for heating installations.

Series 666

Accessories for safety relief valve. Drain channel composed of elbow fitting and straight tundish.

Brass body.
Channel connections MM UNI-EN-ISO 228.
Tundish connections FF UNI-EN-ISO 228.

- Max operating temperature 110 °C

Code	Size	Box	Carton	Cat.
06660500	G 3/4"	1	20	07.01

Series 47

Safety unit.

- Valve pressure setting 3 Bar
- Max operating temperature 90 °C
- Pressure gauge scale 0 ÷ 6 Bar
- S.V. orifice diameter 15 mm
- Max capacity 75 Kw

- Consisting of:
- Automatic air vent valve + check valve
- Standard safety valve with controlled increase with discharge F G1/2"
- Pressure gauge dial with radial connection + check valve

Code	Size	Box	Carton	Cat.
00470610	1"	1	4	07.01

Standard safety valve code 352.04.40 compliant with PED directive - CE1115

07.01 PRESSURE CONTROL AND SAFETY | BY-PASS VALVE

Series 124

Adjustable by-pass valve for total or partial overflow of thermal circuits.

Brass body.
Elastomer seals.
Stainless steel AISI 302 springs.
Shockproof ABS handwheel.
Graduated scale on knob.
Threaded angle connections UNI-EN-ISO 228 (3/4" - 1" - 1"1/4).
Connections with fittings for copper pipe (Ø 22).

- Max operating temperature 110 °C
- Max operating pressure 10 Bar
- Setting range 0.1 ÷ 0.7 Bar
- Setting unit 0.1 Bar

Code	Size	Box	Carton	Cat.
01240500*	G 3/4"	1	10	07.01
01240600*	G 1"	1	10	07.01
01240700*	G 1"1/4	1	5	07.01
01242200**	Ø 22	1	10	07.01

*Connections for steel pipe with union fitting
**Connections complete with fittings for copper pipe Ø 22

ALINOX

Series 46

Adjustable automatic filling unit to refill closed circuits, diaphragm operated with anti-water hammer function, with removable cartridge micro filter, built-in check valve and dial pressure gauge to view downstream pressure.

Nickel-plated brass body.
Stainless steel seal seats.
Elastomer seals.
Threaded connections FF UNI-EN-ISO 228.

- Nominal pressure 25 Bar
- Max upstream pressure 25 Bar
- Adjustable downstream pressure 0.8 ÷ 5.5 Bar
- Max operating temperature 80 °C
- Pressure gauge scale 0 ÷ 10 Bar
- Filtering grade 800 µm

CERTIFICATIONS:
DHW

Code	Size	Model	Box	Carton	Cat.
00460400	G 1/2"	Alinox	1	6	07.01

SMARTFILLER 1/2"

Series 3856

Adjustable automatic filling unit to refill closed circuits, diaphragm operated, complete with self-lubricating technopolymer cartridge, built-in check valve, graduated calibration knob and dial pressure gauge to view downstream pressure.

Brass body.
Stainless steel sealing ring.
Elastomer seals.
Threaded connections MF UNI-EN-ISO 228.

- Nominal pressure 16 Bar
- Max upstream pressure 16 Bar
- Adjustable downstream pressure 0.5 ÷ 4 Bar
- Max operating temperature 80 °C
- Pressure gauge scale 0 ÷ 4 Bar
- Filtering grade 500 µm

BIM

Code	Size	Box	Carton	Cat.
38560400	G 1/2"	1	6	07.01
38560500	G 3/4"	1	6	07.01

FILLER

Series 3153

Adjustable automatic filling unit to refill closed circuits, diaphragm operated with anti-water hammer function, with removable cartridge micro filter, built-in check valve and dial pressure gauge to view downstream pressure.

Nickel-plated brass body.
Elastomer seals.
Threaded connections MFUN HEN-ISO 228

- Nominal pressure 16 Bar
- Max upstream pressure 16 Bar
- Adjustable downstream pressure 0.5 ÷ 4 Bar
- Max operating temperature 80 °C
- Pressure gauge scale 0 ÷ 4 Bar
- Filtering grade 500 µm

CERTIFICATIONS:

Code	Size	Model	Box	Carton	Cat.
31530400	G 1/2"	Filler	1	6	07.01

SMARTFILLER

Automatic diaphragm filling unit equipped with calibrating knob

RBM SmartFiller M is an automatic fi lling unit, a device that reintegrates fluid into the heating systems.

It is composed of: a pressure reducing valve, a check valve and a shut-off valve.

The pressure reducing valve is diapgragm type and equipped with a pressure gauge to measure the output pressure. The cartridge is compensated seat: upstream pressure variations do not affect the downstream adjustment.

USE

The **RBM SmartFiller M** units are crucial parts that automatically reintegrate any water coming out of the system.
In fact, during the normal operation of a heating system, part of the fluid is lost through the deaerators, in the form of steam mixed with gases that develop continuously in the circuit. The space left free by the fluid, if not duly reinstated, will be occupied by the gases which, when dissolved, form acid solutions that can lead to corrosion.

- Check valve and shut-off valve incorporated
- Output pressure calibration knob
- Pressure gauge
- PN 16
- Special ADZ treatment

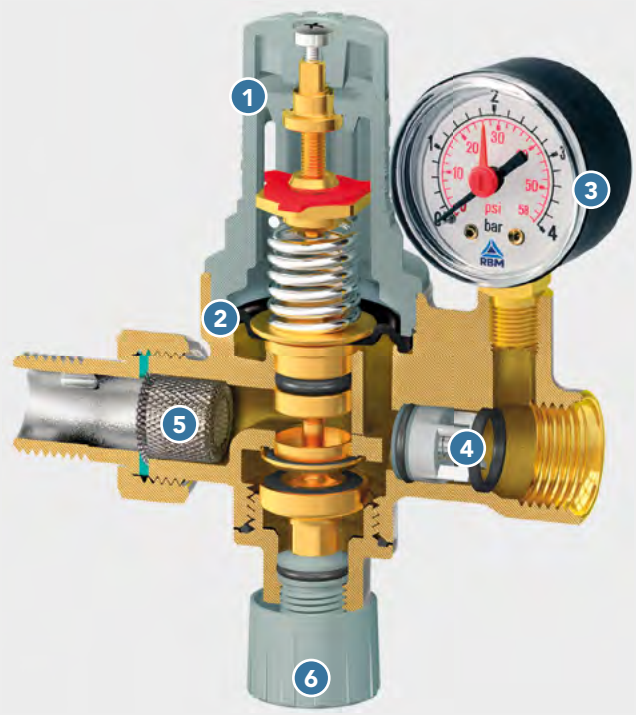

1. **Graduated calibration knob**
   To immediately adjust the output calibration value.
2. **Diaphragm made of elastomer**
3. **Pressure gauge**
   This measures the pressure downstream of the filling unit, namely the pressure in the circuit to be filled.
4. **Check valve**
   Prevents the return of the liquid present in the system towards the aqueduct (upstream of the supply unit).
5. **Filter**
6. **Shut-off valve**
   Cuts off the power supply and therefore excludes the refi ll function. This is useful during system maintenance, or in case of failure of any part of the circuit.

07. CONTROL AND SAFETY COMPONENTS

07.03 FLUIDS SECURITY CONTROL

Leak detectors

STOP LEAK

Series 3897

Electronic water leak detector.

Device that trips when leaks and abnormal energy consumption are detected, by cutting the power supply off and preventing flooding or unwanted consumption.

The Stop Leak system is composed of:
Motorised shut-off valve;
Thermodynamic micro-leak detection sensor;
Control electronics with potential-free contact interface and status remote control;
Management and commissioning App;
Bluetooth protocol for commissioning and LORA for communication;
Remote display (only supplied with codes 3897.05.10 and 3897.06.10).

- Sensitivity: 0.2 l/h
- Reaction time: programmable
- Tripping threshold: programmable
- Temperature Range: 0 ÷ 60°C
- Power supply: 12V - 24V AC/DC

CERTIFICATIONS:

PATENTED

Electronic system water leak detector with motorised shut-off valve

Code	Size	Sensitivity (l/h)	Box	Carton	Cat.
38970580	3/4"	0,2	1	1	07.03
38970680	1"	0,2	1	1	07.03

Electronic system water leak detector with motorised shut-off valve and remote control

Code	Size	Sensitivity (l/h)	Box	Carton	Cat.
38970590	3/4"	0,2	1	1	07.03
38970690	1"	0,2	1	1	07.03

Protection of your system from leaks or unwanted energy consumption during system downtime.
Prevention from any damage due to water leaks.
Saving on energy consumption.
Advantages for the community (water resource protection device).
Possibility to reduce your home insurance premium.
Easy, smart programming.
The system is designed to adapt to the system conditions of use thanks to its self-learning logic.

Series 3898

Stop Leak template.

Template for set up of Stop Leak during plant construction.

Body in polymer.
Threaded connections MM UNI-EN-ISO 228 with flat seal.
PN 16 bar.
Max operating temperature 90°C.

Code	Size	Box	Carton	Cat.
38980500	3/4"	1	1	07.03
38980600	1"	1	1	07.03

Stop | Leak
leak detector

Choose **the future of home protection**; designed to detect even the smallest leaks, preventing flooding and costly damage.

BENEFITS FOR THE USER

- Protection of one's own system from breakage and/or leakage
- Prevention of damage due to water leakage
- Avoid litigation following a leakage problem
- Consumption savings
- Community benefits (saving water resources)
- Possibility of negotiating the premium for home insurance
- Simple programming

ADVANTAGES FOR THE INSTALLER

- Easy assembly
- Possibility of offering the customer greater security for the installation
- Protection against errors resulting from incorrect installation
- Customer loyalty

FOR A SAFER HOME

The Stop Leak system is the result of the latest technology for detecting water leaks: it is the only system capable of **detecting leaks in the order of 0.2 l/h**, slightly less than a table glass.

In hydraulic systems it is always difficult to identify such small leaks, which in the long run can cause serious damage. Similarly even protects the system from the onset of potential flooding caused by faults or omissions.

HOW DOES IT WORK?

Stop Leak, just like a circuit breaker for the electrical circuit, intervenes to prevent damage to your home. Its technology establishes whether, within the system, there is a normal withdrawal of water or an abnormal consumption.
After excluding normal operation, the system intervenes **by closing the shut-off valve**, by interrupting the inflow of water. The programmable regulator, located inside the home, will indicate the presence of a likely water leak on the display. The Stop Leak system consists of: flow sensor, motorised shut-off valve and programmable regulator.

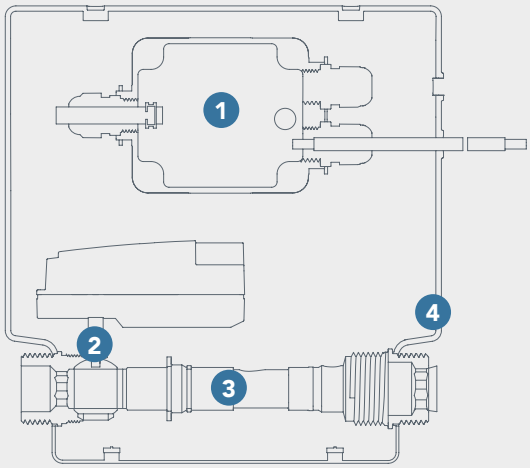

1. Programmable controller
2. Shut-off unit
3. Leak detection block with flow sensor
4. Housing box

07. CONTROL AND SAFETY COMPONENTS

07.04 TEMPERATURE CONTROL AND SAFETY

Anti-freeze valves

ZEROFROST

Series 4093

Antifreeze valve for heat pumps

Brass body.
Brass internal components.
EPDM PEROX seals.
Stainless steel AISI 302 springs.

- Compatible fluid: water
- Max operating pressure 10 Bar
- Temperature range 0÷80°C
- Fluid temperature (open) 3° C
- Fluid temperature (closed) 4° C
- Sensitivity ± 1° C
- Max discharge flow rate at 3 bar: 1.5 l/h

BIM

Code	Size	Kv (m³/h)	Box	Carton	Cat.
40930600	G 1"	55	1	20	07.04
40930700	G 1" 1/4	70	1	20	07.04

RBM zerofrost

Antifreeze valve for heat pumps

The **Zerofrost anti-freeze valve** is designed to allow a small amount of the fluid contained inside the system to drain when its **temperature drops below 3 °C**. It automatically intervenes to prevent the formation of ice within the single-block heat pump circuit, preventing blockages or obstructions in the system that can reduce its efficiency and cause damage to the system.

Zerofrost is an **environmentally friendly solution** because it eliminates the risks of using potentially polluting glycol. It is also an economical choice because it **saves on running and maintenance costs**, keeping the system in perfect working order.

Zerofrost is available in two sizes: **1" and 1"1/4**.

1. **Bulb inserted directly into the flow**
   It avoids negative influences from low ambient temperatures, allowing accurate system drainage only when necessary.
2. **High-performance bulb**
   Precision and speed of intervention guaranteed over time.
3. **Filter ring**
   It protects the bulb from any debris suspended in the water that could cause the drain to malfunction.
4. **Surface treatment of the operating device**
   Ensures proper operation and reliability over time.
5. **Very low discharge rate** (max 1,5 l/h)
   The special design of the drain guarantees dripping only. Unlike other devices whose drains are made with the classic shutter system, Zerofrost discharges only what is necessary, avoiding emptying the system.
6. **Vacuum breaker valve**
   It prevents the creation of negative pressures in the system or piping generated during discharge.
7. **Anti-drip**
   The innovative anti-drip feature prevents the formation of water bubbles and subsequent freezing.

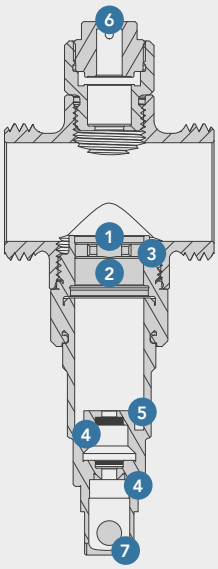

INSTALLATION

Zerofrost automatically intervenes to prevent the formation of ice within the circuit of the single-block heat pumps. **Before installing the device, clean the piping thoroughly** to prevent circulating impurities from impairing its performance.

Antifreeze valves should be **installed outside**, where the lowest temperature can be reached, **and away from heat sources** that could interfere with operation.

Zerofrost **can only be installed in a vertical position**, with the outlet pointing downwards, to allow the discharged water to flow out correctly, unobstructed.

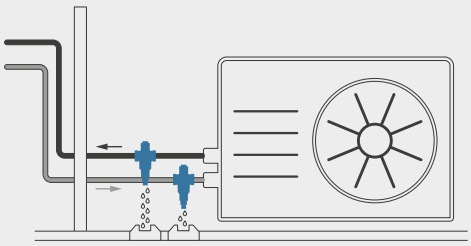

- Protects heat pumps from freezing
- It is automatically activated when the fluid temperature drops below 3 °C
- No power supply required
- Maximum sensitivity (± 1 °C) and rapidity of intervention
- Discharge only what is necessary (max. 1.5 l/h) avoiding draining the system
- Avoids the use of glycol

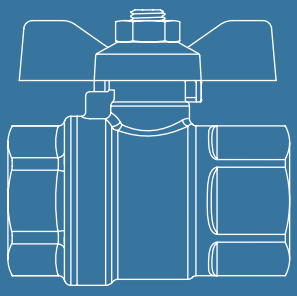

01.
HYDROTHERMAL
DISTRIBUTION

08. BALL VALVES, CHECK VALVES AND SHUT-OFF DEVICES

08.01 BALL VALVES, CHECK VALVES AND SHUT-OFF DEVICES

Ball valves

Check valves

Accessories

ARNO

Series 3371

Heavy full bore ball valve, lever handle operated, FF connections. Suitable for water, water+ glycol, steam, hydrocarbons.

Nickel-plated brass body.
Thick chrome plated brass ball.
PTFE seal.
Threaded connections UNI-EN-ISO 228.

- Operating temperature with water -20 ÷ + 120 °C

CERTIFICATIONS:
PED I ACS

CE certification only for sizes marked with an asterisk.

Code	Size	PN	Box	Carton	Cat.
337114NI	1/4"	40	10	160	08.01
337138NI	3/8"	40	10	160	08.01
337112NI	1/2"	40	8	64	08.01
337134NI	3/4"	40	6	48	08.01
337110NI	1"	40	6	48	08.01
337104NI	1"1/4 *	40	4	32	08.01
337102NI	1"1/2 *	40	2	16	08.01
337120NI	2" *	40	2	10	08.01
337122N0	2"1/2 *	25	8	8	08.01
337130N0	3" *	25	6	6	08.01
337140N0	4" *	10	4	4	08.01

ARNO

Series 3372

Heavy full bore ball valve, butterfly handle operated, FF connections. Suitable for water, water+ glycol, steam, hydrocarbons.

Nickel-plated brass body.
Thick chrome plated brass ball.
PTFE seal.
Threaded connections UNI-EN-ISO 228.

- Operating temperature with water -20 ÷ + 120 °C

CERTIFICATIONS:
PED I ACS

CE certification only for sizes marked with an asterisk.

Code	Size	PN	Box	Carton	Cat.
337214NI	1/4"	40	10	160	08.01
337238NI	3/8"	40	10	160	08.01
337212NI	1/2"	40	10	120	08.01
337234NI	3/4"	40	5	80	08.01
337210NI	1"	40	5	60	08.01
337204NI	1"1/4 *	40	4	32	08.01

ARNO

Series 3373

Heavy full bore ball valve, lever handle operated, MF connections. Suitable for water, water+ glycol, steam, hydrocarbons.

Nickel-plated brass body.
Thick chrome plated brass ball.
PTFE seal.
Threaded connections UNI-EN-ISO-228.

- Operating temperature with water -20 ÷ + 120 °C

CERTIFICATIONS:
PED I ACS

CE certification only for sizes marked with an asterisk.

Code	Size	PN	Box	Carton	Cat.
337314NI	1/4"	40	10	160	08.01
337338NI	3/8"	40	10	160	08.01
337312NI	1/2"	40	10	120	08.01
337334NI	3/4"	40	6	48	08.01
337310NI	1"	40	4	48	08.01
337304NI	1"1/4 *	40	4	32	08.01
337302NI	1"1/2 *	40	2	20	08.01
337320NI	2" *	40	2	10	08.01

ARNO

Series 3374

Heavy full bore ball valve, butterfly handle operated, MF connections. Suitable for water, water+ glycol, steam, hydrocarbons.

Nickel-plated brass body.
Thick chrome plated brass ball.
PTFE seal.
Threaded connections UNI-EN-ISO 228.

- Operating temperature with water -20 ÷ + 120 °C

CERTIFICATIONS:
DHW

FEATURES:

COMPATIBLE SYSTEMS:
KILMA-GRAF
KILMA-RETE
KILMA-INDUSTRIALE

BIM

Code	Size	PN	Box	Carton	Cat.
337414NI	1/4"	40	10	160	08.01
337438NI	3/8"	40	10	160	08.01
337412NI	1/2"	40	10	120	08.01
337434NI	3/4"	40	5	60	08.01
337410NI	1"	40	5	60	08.01

ARNO
Series 3386

Heavy full bore angled ball valve, butterfly handle operated, F connection with M union. Suitable for water, water+ glycol, steam, hydrocarbons.

Nickel-plated brass body.
Thick chrome plated brass ball.
PTFE seal.
Threaded connections UNI-EN-ISO 228.

• Operating temperature with water -20 ÷ + 120 °C

CERTIFICATIONS:
DHW

Code	Size A	Size B	PN	Box	Carton	Cat.
338609NI	1/2"	1/2"	40	10	120	08.01
3386A1NI	3/4"	3/4"	40	5	60	08.01
3386A2NI	1"	1"	40	4	40	08.01

ARNO
Series 3255

Curved ball bibcock, lever handle operated. Suitable for water, water+ glycol, steam, hydrocarbons.

Nickel-plated brass body.
Thick chrome plated brass ball.
PTFE seal.
Elastomer OR gaskets.
Threaded connections UNI-EN-ISO 228.

• Operating temperature with water -20 ÷ + 120 °C

Code	Size	PN	Box	Carton	Cat.
325512NI	1/2"	30	10	80	08.01
325534NI	3/4"	30	5	50	08.01
325510NI	1"	30	4	20	08.01

ARNO
Series 3256

Curved ball bibcock, butterfly handle operated. Suitable for water, water+ glycol, steam, hydrocarbons.

Nickel-plated brass body.
Thick chrome plated brass ball.
PTFE seal.
Elastomer OR gaskets.
Threaded connections UNI-EN-ISO 228.

• Operating temperature with water -20 ÷ + 120 °C

Code	Size	PN	Box	Carton	Cat.
325612NI	1/2"	30	10	80	08.01
325634NI	3/4"	30	5	50	08.01
325610NI	1"	30	4	20	08.01

NILO
Series 2959.A

Full bore ball valve, lever handle operated, FF connections.
Suitable for water, water+glycol.

Nickel-plated brass body.
Thick chrome plated brass ball.
PTFE seal.
Elastomer OR gaskets.
ISO 7 (UNI EN 10226) threaded connections.

- Operating temperature with water -20 ÷ +120 °C (without steam)

Code	Size	PN	Box	Carton	Cat.
29590390	3/8"	50	10	40	08.01
29590490	1/2"	40	10	80	08.01
29590590	3/4"	40	5	40	08.01
29590690	1"	40	4	40	08.01
29590790	1"1/4	30	4	24	08.01
29590890	1"1/2	25	2	12	08.01
29590990	2"	25	2	8	08.01

ISO 7 (UNI EN 10226) threaded connections.

NILO
Series 2959.B

Full bore ball valve, lever handle operated, FF connections.
Suitable for water, water+glycol.

Nickel-plated brass body.
Thick chrome plated brass ball.
PTFE seal.
Elastomer OR gaskets.
ISO 7 (UNI EN 10226) threaded connections.

- Operating temperature with water -20 ÷ +120 °C (without steam)

Code	Size	PN	Box	Carton	Cat.
29590400	1/2"	40	10	80	08.01
29590500	3/4"	40	5	50	08.01
29590600	1"	40	4	40	08.01
29590700	1"1/4	30	4	24	08.01
29590800	1"1/2	25	2	12	08.01
29590900	2"	25	2	8	08.01

ISO 7 (UNI EN 10226) threaded connections.

NILO
Series 2959.C

Full bore ball valve, butterfly handle operated, FF connections. Suitable for water, water+glycol.

Nickel-plated brass body.
Thick chrome plated brass ball.
PTFE seal.
Elastomer OR gaskets.
ISO 7 (UNI EN 10226) threaded connections.

- Operating temperature with water -20 ÷ +120 °C (without steam)

Code	Size	PN	Box	Carton	Cat.
29590370	3/8"	50	10	40	08.01
29590470	1/2"	40	10	80	08.01
29590570	3/4"	40	5	50	08.01
29590670	1"	40	5	40	08.01
29590770	1"1/4	30	4	24	08.01

ISO 7 (UNI EN 10226) threaded connections.

NILO
Series 2960.A

Full bore ball valve, lever handle operated, MF connections. Suitable for water, water+glycol.

Nickel-plated brass body.
Thick chrome plated brass ball.
PTFE seal.
Elastomer OR gaskets.
ISO 7 (UNI EN 10226) threaded connections.

- Operating temperature with water -20 ÷ +120 °C (without steam)

Code	Size	PN	Box	Carton	Cat.
29600390	3/8"	50	10	160	08.01
29600490	1/2"	40	10	80	08.01
29600590	3/4"	40	5	50	08.01
29600690	1"	40	4	40	08.01
29600790	1"1/4	30	4	24	08.01
29600890	1"1/2	25	2	12	08.01
29600990	2"	25	2	8	08.01

ISO 7 (UNI EN 10226) threaded connections.

NILO
Series 2960.B

Full bore ball valve, lever handle operated, MF connections.
Suitable for water, water+glycol.

Nickel-plated brass body.
Thick chrome plated brass ball.
PTFE seal.
Elastomer OR gaskets.
ISO 7 (UNI EN 10226) threaded connections.

- Operating temperature with water -20 ÷ +120 °C (without steam)

Code	Size	PN	Box	Carton	Cat.
29600300	3/8"	50	10	40	08.01
29600400	1/2"	40	10	80	08.01
29600500	3/4"	40	5	50	08.01
29600600	1"	40	4	40	08.01
29600700	1"1/4	30	4	24	08.01
29600800	1"1/2	25	2	12	08.01
29600900	2"	25	2	8	08.01

ISO 7 (UNI EN 10226) threaded connections.

NILO
Series 2960.C

Full bore ball valve, butterfly handle operated, MF connections.
Suitable for water, water+glycol.

Nickel-plated brass body.
Thick chrome plated brass ball.
PTFE seal.
Elastomer OR gaskets.
ISO 7 (UNI EN 10226) threaded connections.

- Operating temperature with water -20 ÷ +120 °C (without steam)

Code	Size	PN	Box	Carton	Cat.
29600370	3/8"	50	10	40	08.01
29600470	1/2"	40	10	80	08.01
29600570	3/4"	40	5	50	08.01
29600670	1"	40	5	40	08.01
29600770	1"1/4	30	4	24	08.01

ISO 7 (UNI EN 10226) threaded connections.

NILO
Series 3346

Full bore ball valve, butterfly handle operated, F connection with M union. Suitable for water, water+ glycol.

Nickel-plated brass body.
Thick chrome plated brass ball.
PTFE seal.
Elastomer OR gaskets.
ISO 7 (UNI EN 10226) threaded connections.

- Operating temperature with water -20 ÷ +120 °C (without steam)

CERTIFICATIONS:
DHW

Code	Size A	Size B	PN	Box	Carton	Cat.
33460470	1/2"	1/2"	40	15	90	08.01
33460570	3/4"	3/4"	40	10	40	08.01
33460670	1"	1"	40	5	30	08.01
33460770	1"1/4	1"1/4	30	4	16	08.01

ISO 7 (UNI EN 10226) threaded connections.

NILO
Series 2860.A

Ball bib-cock, with lever handle. Suitable for water, water+glycol.

Nickel-plated brass body.
Thick chrome plated brass ball.
PTFE seal.
Elastomer OR gaskets.
Threaded connections UNI-EN-ISO 228.

- Operating temperature with water -0 ÷ +80 °C

Code	Size	PN	Box	Carton	Cat.
28600402	1/2"	10	8	64	08.01
28600502	3/4"	10	6	48	08.01

NILO
Series 2860.B

Ball bib-cock, with butterfly handle. Suitable for water, water+glycol.

Nickel-plated brass body.
Thick chrome plated brass ball.
PTFE seal.
Elastomer OR gaskets.
Threaded connections UNI-EN-ISO 228.

- Operating temperature with water -0 ÷ +80 °C

Code	Size	PN	Box	Carton	Cat.
28600412	1/2"	10	10	80	08.01
28600512	3/4"	10	8	64	08.01

NILO
Series 3176

Square ball valve, butterfly handle operated, F connection with M union. Suitable for water, water+glycol.

Nickel-plated brass body.
Thick chrome plated brass ball.
PTFE seal.
Elastomer OR gaskets.
Threaded connections UNI-EN-ISO 228.

- Operating temperature with water -20 ÷ +120 °C (without steam)

CERTIFICATIONS:

Code	Size	PN	Box	Carton	Cat.
31760500	3/4"	25	5	40	08.01
31760600	1"	25	4	32	08.01

NILO
Series 3171

Three-way ball valve, T-shaped manoeuvre operated, with lever handle, FFF connections.
Suitable for water, water+ glycol.

Nickel-plated brass body.
Thick chrome plated brass ball.
PTFE seal.
Elastomer OR gaskets.
Threaded connections UNI-EN-ISO 228.

- Operating temperature with water -20 ÷ +120 °C (without steam)

CERTIFICATIONS:

Code	Size	PN	Box	Carton	Cat.
31710400	1/2"	25	1	6	08.01
31710500	3/4"	25	1	6	08.01
31710600	1"	25	1	6	08.01

NILO
Series 3172

Three-way ball valve, L-shaped manoeuvre operated, with lever handle, FFF connections.
Suitable for water, water+ glycol.

Nickel-plated brass body.
Thick chrome plated brass ball.
PTFE seal.
Elastomer OR gaskets.
Threaded connections UNI-EN-ISO 228.

- Operating temperature with water -20 ÷ +120 °C (without steam)

CERTIFICATIONS:

Code	Size	PN	Box	Carton	Cat.
31720400	1/2"	25	1	6	08.01
31720500	3/4"	25	1	6	08.01
31720600	1"	25	1	6	08.01

IRO
Series 854.A

Standard bore ball valve, lever handle operated, FF connections. Suitable for water, water+glycol.

Nickel-plated brass body.
Thick chrome plated brass ball.
PTFE seal.
Elastomer OR gaskets.
Threaded connections UNI-EN-ISO 228.

- Operating temperature with water -20 ÷ +120 °C (without steam)

CERTIFICATIONS:
DHW

Code	Size	PN	Box	Carton	Cat.
08550332*	3/8"	50	20	80	08.01
08540432	1/2"	50	15	90	08.01
08540532	3/4"	50	12	48	08.01
08540632	1"	40	6	36	08.01
08540732	1"1/4	30	6	24	08.01
08540832	1"1/2	25	2	12	08.01
08540932	2"	25	2	8	08.01

*Full bore

IRO
Series 854.B

Standard bore ball valve, lever handle operated, FF connections. Suitable for water, water+glycol.

Nickel-plated brass body.
Thick chrome plated brass ball.
PTFE seal.
Elastomer OR gaskets.
Threaded connections UNI-EN-ISO 228.

- Operating temperature with water -20 ÷ +120 °C (without steam)

CERTIFICATIONS:
DHW

Code	Size	PN	Box	Carton	Cat.
08550342*	3/8"	50	20	80	08.01
08540442	1/2"	50	15	90	08.01
08540542	3/4"	50	12	48	08.01
08540642	1"	40	6	36	08.01
08540742	1"1/4	30	6	24	08.01
08540842	1"1/2	25	2	12	08.01
08540942	2"	25	2	8	08.01

*Full bore

IRO
Series 989

Standard bore ball valve, butterfly handle operated, FF connections. Suitable for water, water+glycol.

Nickel-plated brass body.
Thick chrome plated brass ball.
PTFE seal.
Elastomer OR gaskets.
Threaded connections UNI-EN-ISO 228.

- Operating temperature with water -20 ÷ +120 °C (without steam)

CERTIFICATIONS:
DHW

Code	Size	PN	Box	Carton	Cat.
09890332*	3/8"	50	20	80	08.01
09890432	1/2"	50	15	90	08.01
09890532	3/4"	50	12	48	08.01
09890632	1"	40	6	36	08.01
09890732	1"1/4	30	8	24	08.01

*Full bore

IRO
Series 885.A

Standard bore ball valve, lever handle operated, MM connections. Suitable for water, water+glycol.

Nickel-plated brass body.
Thick chrome plated brass ball.
PTFE seal.
Elastomer OR gaskets.
Threaded connections UNI-EN-ISO 228.

- Operating temperature with water -20 ÷ +120 °C (without steam)

CERTIFICATIONS:
DHW

Code	Size	PN	Box	Carton	Cat.
08850452	1/2"	50	15	60	08.01
08850552	3/4"	50	12	48	08.01
08850652	1"	40	6	36	08.01

*Full bore

IRO
Series 885.B

Standard bore ball valve, lever handle operated, MM connections. Suitable for water, water+glycol.

Nickel-plated brass body.
Thick chrome plated brass ball.
PTFE seal.
Elastomer OR gaskets.
Threaded connections UNI-EN-ISO 228.

- Operating temperature with water -20 ÷ +120 °C (without steam)

CERTIFICATIONS:
DHW

Code	Size	PN	Box	Carton	Cat.
08850332*	3/8"	50	20	80	08.01
08850432	1/2"	50	15	60	08.01
08850532	3/4"	50	12	48	08.01
08850632	1"	40	6	36	08.01

*Full bore

IRO
Series 885.C

Standard bore ball valve, butterfly handle operated, MM connections. Suitable for water, water+glycol.

Nickel-plated brass body.
Thick chrome plated brass ball.
PTFE seal.
Elastomer OR gaskets.
Threaded connections UNI-EN-ISO 228.

- Operating temperature with water -20 ÷ +120 °C (without steam)

CERTIFICATIONS:
DHW

WRAS only for part number 08850542

Code	Size	PN	Box	Carton	Cat.
08850342*	3/8"	50	20	80	08.01
08850442	1/2"	50	15	60	08.01
08850542	3/4"	50	12	48	08.01
08850642	1"	40	6	36	08.01

*Full bore

IRO
Series 886.A

Standard bore ball valve, lever handle operated, MF connections. Suitable for water, water+glycol.

Nickel-plated brass body.
Thick chrome plated brass ball.
PTFE seal.
Elastomer OR gaskets.
Threaded connections UNI-EN-ISO 228.

- Operating temperature with water -20 ÷ +120 °C (without steam)

CERTIFICATIONS:
DHW

Code	Size	PN	Box	Carton	Cat.
08860332*	3/8"	50	20	40	08.01
08860432	1/2"	50	15	90	08.01
08860532	3/4"	50	12	48	08.01
08860632	1"	40	6	36	08.01
08860732	1"1/4	30	5	20	08.01
08860832	1"1/2	25	2	12	08.01
08860932	2"	25	2	8	08.01

*Full bore

IRO
Series 886.B

Standard bore ball valve, lever handle operated, MF connections. Suitable for water, water+glycol.

Nickel-plated brass body.
Thick chrome plated brass ball.
PTFE seal.
Elastomer OR gaskets.
Threaded connections UNI-EN-ISO 228.

- Operating temperature with water -20 ÷ +120 °C (without steam)

CERTIFICATIONS:
DHW

Code	Size	PN	Box	Carton	Cat.
08860342*	3/8"	50	20	80	08.01
08860442	1/2"	50	15	90	08.01
08860542	3/4"	50	12	48	08.01
08860642	1"	40	6	36	08.01
08860742	1"1/4	30	5	20	08.01
08860842	1"1/2	25	2	12	08.01
08860942	2"	25	2	8	08.01

*Full bore

IRO
Series 887

Standard bore ball valve, butterfly handle operated, MF connections. Suitable for water, water+glycol.

Nickel-plated brass body.
Thick chrome plated brass ball.
PTFE seal.
Elastomer OR gaskets.
Threaded connections UNI-EN-ISO 228.

- Operating temperature with water -20 ÷ +120 °C (without steam)

CERTIFICATIONS:
DHW

Code	Size	PN	Box	Carton	Cat.
08870332*	3/8"	50	20	80	08.01
08870432	1/2"	50	15	90	08.01
08870532	3/4"	50	12	48	08.01
08870632	1"	40	6	36	08.01
08870732	1"1/4	30	6	18	08.01

*Full bore

IRO
Series 67.C

Standard bore ball valve, butterfly handle operated, F connection with M union coupling. Suitable for water, water+glycol.

Nickel-plated brass body.
Thick chrome plated brass ball.
PTFE seal.
Elastomer OR gaskets.
Threaded connections UNI-EN-ISO 228.

- Operating temperature with water -20 ÷ +120 °C (without steam)

CERTIFICATIONS:
DHW

Code	Size A	Size B	PN	Box	Carton	Cat.
00670402	1/2"	1/2"	25	20	80	08.01
00670502	3/4"	3/4"	25	12	48	08.01
00670602	1"	1"	25	6	24	08.01
00670702	1"1/4	1"1/4	25	4	16	08.01

IRO
Series 67.D

Standard bore ball valve, butterfly handle operated, F connection with M union coupling. Suitable for water, water+glycol.

Nickel-plated brass body.
Thick chrome plated brass ball.
PTFE seal.
Elastomer OR gaskets.
Threaded connections UNI-EN-ISO 228.

- Operating temperature with water -20 ÷ +120 °C (without steam)

CERTIFICATIONS:
DHW

Code	Size A	Size B	PN	Box	Carton	Cat.
00670412	1/2"	1/2"	25	20	80	08.01
00670512	3/4"	3/4"	25	12	48	08.01
00670612	1"	1"	25	6	24	08.01
00670712	1"1/4	1"1/4	25	4	16	08.01

IRO
Series 2544.A

Standard bore ball valve, with built-in check valve, butterfly handle operated, 1"1/2 pump connection. Suitable for water, water+glycol.

Nickel-plated brass body.
Thick chrome plated brass ball.
PTFE seal.
VITON OR gaskets.
Threaded connections UNI-EN-ISO 228.

- Operating temperature with water -20 ÷ +120 °C (without steam)

CERTIFICATIONS:
DHW

Code	Size A	Size B	PN	Box	Carton	Cat.
25440500	3/4"	1"1/2	50	8	24	08.01

Ball valve + built-in check valve.

IRO

Series 2544.B

Standard bore ball valve, butterfly handle operated, 1"1/2 pump connection. Suitable for water, water+glycol.

Nickel-plated brass body.
Thick chrome plated brass ball.
PTFE seal.
VITON OR gaskets.
Threaded connections UNI-EN-ISO 228.

- Operating temperature with water -20 ÷ +120 °C (without steam)

CERTIFICATIONS:
DHW

Code	Size A	Size B	PN	Box	Carton	Cat.
25440510	3/4"	1"1/2	50	8	24	08.01

IRO

Series 2093.A

Standard bore ball valve, lever handle operated, copper pipe end connections. Suitable for water, water+glycol.

Nickel-plated brass body.
Thick chrome plated brass ball.
PTFE seal.
Elastomer OR gaskets.
Copper pipe end connections.

- Operating temperature with water -20 ÷ +120 °C (without steam)

CERTIFICATIONS:
DHW

Code	Size	PN	Box	Carton	Cat.
20931520	15	50	15	60	08.01
20932220	22	50	10	40	08.01
20932820	28	40	6	24	08.01
20935420	54	25	1	4	08.01

The measurement is expressed in mm

IRO
Series 2093.B

Standard bore ball valve, butterfly handle operated, copper pipe end connections. Suitable for water, water+glycol.

Nickel-plated brass body.
Thick chrome plated brass ball.
PTFE seal.
Elastomer OR gaskets.
Copper pipe end connections.

- Operating temperature with water -20 ÷ +120 °C (without steam)

CERTIFICATIONS:
DHW

Code	Size	PN	Box	Carton	Cat.
20931500	15	50	20	80	08.01
20932200	22	50	12	80	08.01
20932800	28	40	6	24	08.01

The measurement is expressed in mm

IRO
Series 3465

Standard bore ball valve, lever handle operated, FF connections. Suitable for water, water+glycol.

Nickel-plated brass body.
Thick chrome plated brass ball.
PTFE seal.
Elastomer OR gaskets.
Threaded connections UNI-EN-ISO 228.

- Operating temperature with water 0 ÷ +80 °C

CERTIFICATIONS:
DHW

Code	Size	PN	Box	Carton	Cat.
34650400	1/2"	50	1	60	08.01
34650500	3/4"	50	1	50	08.01
34650600	1"	40	1	30	08.01

860 Series - UNTIL STOCKS ARE FULL

Check valve, FF connections, brass rod. Suitable for water.

Brass body.
Elastomer gaskets.
Stainless steel AISI 302 spring.
Threaded connections FF UNI-EN-ISO 228.

- Min. opening pressure 0.04 Bar
- Max operating temperature 90 °C (Water)
- Max operating temperature 110 °C (Air)

CERTIFICATIONS:
DHW

Code	Size	PN	Box	Carton	Cat.
08600402	1/2"	25	30	120	08.01
08600502	3/4"	25	16	64	08.01
08600602	1"	25	10	60	08.01
08600702	1"1/4	16	8	32	08.01
08600802	1"1/2	16	4	24	08.01
08600902	2"	16	2	12	08.01

Check valve, FF connections, plastic rod

Code	Size	PN	Box	Carton	Cat.
08600412	1/2"	25	30	120	08.01
08600512	3/4"	25	16	64	08.01
08600612	1"	25	10	60	08.01
08600712	1"1/4	16	8	32	08.01
08600812	1"1/2	16	4	24	08.01
08600912	2"	16	2	12	08.01

Series 3085

Check valve, FF connections, brass rod. Suitable for water.

Brass body.
Elastomer gaskets.
Threaded connections FF UNI-EN-ISO 228.

- Operating temperature with water 0 ÷ +80 °C

Code	Size	PN	Box	Carton	Cat.
30853810	3/8"	16	10	120	08.01
30851210	1/2"	16	10	120	08.01
30853410	3/4"	16	10	120	08.01
30851010	1"	16	5	50	08.01
30850410	1"1/4	16	4	40	08.01
30850210	1"1/2	16	4	32	08.01
30852010	2"	16	2	20	08.01
30822200	2"1/2	6	2	16	08.01
30823000	3"	6	2	12	08.01
30824000	4"	6	1	1	08.01

Series 3086

Filter with threaded fitting. Matched with the check valves, it provides proper protection for the pump.

Stainless steel AISI 304L filter.
Nylon 6.6 threaded fitting.

- Max operating temperature 90 °C

Code	Size	Box	Carton	Cat.
30863810	3/8"	10	120	08.01
30861210	1/2"	10	120	08.01
30863410	3/4"	10	120	08.01
30861010	1"	10	100	08.01
30860410	1"1/4	8	80	08.01
30860210	1"1/2	8	64	08.01
30862010	2"	4	40	08.01
30862200	2"1/2	3	24	08.01
30863000	3"	2	16	08.01
30864000	4"	1	8	08.01

Series 589

Hydrant box with ball valve and hose connection. Suitable for water.

Brass valve body.
Thick chrome plated brass ball.
Polypropylene well.
PTFE valve seals.
Threaded connections UNI-EN-ISO 228.
PN 16.

- Operating temperature with water 0 ÷ +80 °C

Code	Size A	Size B	Hose holder size	PN	Box	Carton	Cat.
05890500	3/4"	3/4"	ø 15	16	1	10	08.01
05890600	3/4"	1"	ø 20	16	1	10	08.01

Series 24

Wall siphon for washing machine.

Nickel-plated brass body.
Stainless steel wall plate.
Hose connection Ø 22 mm.
Drain pipe connection Ø 32 mm.

- Max operating temperature 100 °C

Code	Model	Box	Carton	Cat.
00243210	System	10	40	08.01

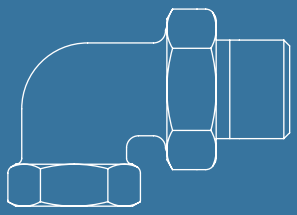

01.
HYDROTHERMAL
DISTRIBUTION

09. FITTINGS

09.01 FITTINGS

Fittings for valves and piping
Fittings for manifolds

Series 41.A

Compression fitting for annealed copper pipe.

Brass nut and pipe clamping ogive.
Nickel plated nut.
Elastomer seal ogive.
Standard RBM threaded F connection.

- Max operating temperature 95 °C
- Max operating pressure 10 Bar

Code	Size	Box	Carton	Cat.
00411020	RBM - Ø 10	10	100	09.01
00411220	RBM - Ø 12	10	100	09.01
00411420	RBM - Ø 14	10	100	09.01
00411520	RBM - Ø 15	10	100	09.01
00411620	RBM - Ø 16	10	100	09.01

Standard RBM thread W 24.5x19 F

Series 41.B

Compression fitting for annealed copper pipe.

PATENTED

Brass nut and pipe clamping ogive.
Nickel plated nut.
Elastomer seal ring.
Standard RBM threaded F connection.

- Max operating temperature 95 °C
- Max operating pressure 10 Bar

Code	Size	Box	Carton	Cat.
00411840	RBM - Ø 18	10	100	09.01

Standard RBM thread W 24.5x19 F

Only to be used with seat set at Ø18.
To be used with reducing coupling code 57.18.00 (see page 120) to connect the Ø18 fitting to valves/manifolds with RBM Standard thread.

Series 602

Compression fitting for raw copper pipe in bars, annealed copper, brass, soft steel and stainless steel.

PATENTED

Brass nut and pipe clamping ogive.
Nickel plated nut.
Elastomer seal ogive.
Standard RBM threaded F connection.

- Max operating temperature 95 °C
- Max operating pressure 10 Bar

Code	Size	Box	Carton	Cat.
06021000	RBM - Ø 10	10	100	09.01
06021200	RBM - Ø 12	10	100	09.01
06021400	RBM - Ø 14	10	100	09.01
06021500	RBM - Ø 15	10	100	09.01
06021600	RBM - Ø 16	10	100	09.01

Standard RBM thread W 24.5x19 F

Series 71

Compression fitting for polyethylene pipe.

Brass nut, core and pipe clamping ogive.
Nickel plated nut.
Elastomer seal ring.
Standard RBM threaded F connection.

- Max operating temperature 95 °C
- Max operating pressure 10 Bar

CERTIFICATIONS:
DHW

Code	Size	Box	Carton	Cat.
00711030	10x1,2	10	100	09.01
00711200	12x2	10	100	09.01
00711220	12x1,3	10	100	09.01
00711400	14x2	10	100	09.01
00711500	15x2,5	10	100	09.01
00711510	15x2	10	100	09.01
00711600	16x2	10	100	09.01
00711620	16x1,5	10	100	09.01
00711630	16x2,7	10	100	09.01
00711640	16x2,2	10	100	09.01
00711700	17x2	10	100	09.01
00711800	18x2,5	10	100	09.01
00711830	18x2	10	100	09.01
00712010	20x2	10	100	09.01
00712040	20x2,8	10	100	09.01

Standard RBM thread W 24.5x19 F
Size: Outside Ø x pipe thickness

Series 122

Compression fitting for polyethylene pipe.

Brass nut, core and pipe clamping ogive.
Nickel plated nut.
Elastomer seals.
Standard RBM threaded F connection.

- Max operating temperature 95 °C
- Max operating pressure 10 Bar

CERTIFICATIONS:
DHW

CSTB certification (QB) valid only in conjunction with CSTB-certified RBM KILMA-FLEX PE-RT pipe, series 988.

Code	Size	Box	Carton	Cat.
01221200	12x1,1	10	100	09.01
01221600	16x1,5	10	100	09.01
01222000	20x1,9	10	100	09.01

Standard RBM thread W 24.5x19 F
Size: Outside Ø x pipe thickness

Series 70

Fitting for metal-plastic multilayer pipe.

Compatible with Q-Tec copper pipe in matching sizes. Respect the pipe flaring and gauging conditions.

Brass nut, core and pipe clamping ogive.
Nickel plated nut.
Elastomer seals.
Standard RBM threaded F connection.

- Max operating temperature 95 °C
- Max operating pressure 10 Bar

CERTIFICATIONS:

DHW

CSTB certification (QB) valid only in conjunction with CSTB-certified RBM KILMA-FLEX PE-RT pipe, series 988.

Code	Size	Box	Carton	Cat.
00701400	14x2	10	100	09.01
00701490	14,4x2,2	10	100	09.01
00701600	16x2	10	100	09.01
00701610	16x2,5	10	100	09.01
00701620	16x2,25	10	100	09.01
00701630	16,2x2,6	10	100	09.01
00701690	16,4x2,2	10	100	09.01
00701710	17x2	10	100	09.01
00701730	17x3	10	100	09.01
00701740	17,2x3	10	100	09.01
00701800	18x2	10	100	09.01
00702000	20x2	10	100	09.01
00702010	20x2,5	10	100	09.01
00702020	20x2,25	10	100	09.01
00702030	20x2,9	10	100	09.01

Standard RBM thread W 24.5x19 F
Size: Outside Ø x pipe thickness

Series 1216

Fitting for metal-plastic multilayer pipe, technopolymer core

Brass nut and pipe clamping ogive.
Nickel plated nut.
Technopolymer core.
Elastomer seal ring.
Standard RBM threaded F connection.

- Max operating temperature 95 °C
- Max operating pressure 10 Bar

Code	Size	Box	Carton	Cat.
12161400	14x2	10	100	09.01
12161600	16x2	10	100	09.01

Standard RBM thread W 24.5x19 F
Size: Outside Ø x pipe thickness

Series 5.A

Heavy three-piece elbow fitting.

Nickel-plated brass body.
O-Ring seal in FKM.
Threaded connections MF UNI-EN-ISO 228.

- Max operating temperature 180 °C
- Max operating pressure 10 Bar

CERTIFICATIONS:
DHW

Code	Size	Box	Carton	Cat.
0005031B	3/8"	10	60	09.01
0005041B	1/2"	10	60	09.01
0005051B	3/4"	10	40	09.01
0005061B	1"	10	40	09.01
0005071B	1"1/4	8	32	09.01
0005081B	1"1/2	4	16	09.01
0005091B	2"	2	8	09.01

Suitable for gas, air, hot and cold drinking water, hydrocarbons, solar systems.

Series 58

Fitting for pipe connection to manifold / Heavy three-piece straight fitting.

Nickel-plated brass body.
O-Ring seal in FKM.
Threaded connections MF UNI-EN-ISO 228.

- Max operating temperature 180 °C
- Max operating pressure 10 Bar

CERTIFICATIONS:
DHW

Code	Size	Box	Carton	Cat.
00580300	3/8"	10	60	09.01
00580400	1/2"	10	60	09.01
00580500	3/4"	10	40	09.01
00580600	1"	10	40	09.01
00580700	1"1/4	8	32	09.01
00580800	1"1/2	5	20	09.01
00580900	2"	2	8	09.01

Suitable for gas, air, hot and cold drinking water, hydrocarbons, solar systems.

Series 5.B

Three-piece elbow fitting.

Brass body.
O-Ring seal in FKM.
Threaded connections MF UNI-EN-ISO 228.

- Max operating temperature 180 °C
- Max operating pressure 10 Bar

CERTIFICATIONS:
DHW

Code	Size	Box	Carton	Cat.
00050310	3/8"	10	60	09.01
00050410	1/2"	10	60	09.01
00050510	3/4"	10	40	09.01
00050610	1"	10	40	09.01
00050710	1"1/4	8	32	09.01
00050810	1"1/2	4	16	09.01
00050910	2"	2	8	09.01

Suitable for gas, air, hot and cold drinking water, hydrocarbons, solar systems.

Series 6

Three-piece straight fitting.

Brass body.
O-Ring seal in FKM.
Threaded connections MF UNI-EN-ISO 228.

- Max operating temperature 180 °C
- Max operating pressure 10 Bar

CERTIFICATIONS:
DHW

Code	Size	Box	Carton	Cat.
00060310	3/8"	10	60	09.01
00060410	1/2"	10	60	09.01
00060510	3/4"	10	40	09.01
00060610	1"	10	40	09.01
00060710	1"1/4	8	32	09.01
00060810	1"1/2	5	20	09.01
00060910	2"	2	8	09.01

Suitable for gas, air, hot and cold drinking water, hydrocarbons, solar systems.

Series 97

Fitting for pipe connection to manifold / Three-piece straight fitting, with 5 mm off-centre adjustment.

Nickel-plated brass body.
Elastomer O-Ring seal.
Threaded connections MF UNI-EN-ISO 228.

- Max operating temperature 110 °C
- Max operating pressure 10 Bar

CERTIFICATIONS:
DHW

Code	Size	Box	Carton	Cat.
00970500	3/4"	10	10	09.01
00970600	1"	10	10	09.01

Series 72

Three-piece MM joint straight fitting

Nickel-plated brass body.
Elastomer O-Ring seal on connections.
Threaded connections MM UNI-EN-ISO 228.

- Max operating temperature 110 °C
- Max operating pressure 10 Bar

CERTIFICATIONS:
DHW

Code	Size A	Size B	Box	Carton	Cat.
00720400	1/2"	1/2"	25	25	09.01
00720500	3/4"	3/4"	10	40	09.01
00720600	1"	1"	10	40	09.01
00720650	1"	1"1/4	6	24	09.01
00720700	1"1/4	1"1/4	10	10	09.01
00720800	1"1/2	1"1/2	5	5	09.01
00720900	2"	2"	2	2	09.01

Series 1100

Three-piece MM joint fitting with OR seal on connections.

Nickel-plated brass body
Elastomer o-Ring seal on the connections
Threaded connections MM UNI-EN-ISO 228

- Max operating temperature 100 °C
- Max operating pressure 10 Bar

CERTIFICATIONS:
DHW

Code	Size	Box	Carton	Cat.
11000600	1"	10	10	09.01

Use for connecting manifolds to zone valves. Used on RBM products with prearrangement on OR seal (filters, pressure reducing valves, etc...).

Series 164.A

40 mm extension for copper pipe.

Nickel-plated brass body.
Elastomer seals.
Standard RBM threaded F connection.

- Max operating temperature 95 °C
- Max operating pressure 10 Bar

CERTIFICATIONS:
DHW

Code	Size	Box	Carton	Cat.
01640400	RBM - Ø 10	10	40	09.01
01640410	RBM - Ø 12	10	40	09.01
01640420	RBM - Ø 14	10	40	09.01

Standard RBM thread W 24.5x19 F

Series 164.B

40 mm extension for multilayer polyethylene pipe.

Nickel-plated brass body.
Elastomer seals.
Standard RBM threaded F connection.

- Max operating temperature 95 °C
- Max operating pressure 10 Bar

CERTIFICATIONS:
DHW

Code	Size	Box	Carton	Cat.
01641620	16x2	10	40	09.01

RBM standard thread W 24.5x19F F

Series 81

In-line fitting for joining copper, polyethylene and multilayer metal-plastic pipes.

Nickel-plated brass body.
Standard RBM threaded M connection.

- Max operating temperature 110 °C
- Max operating pressure 10 Bar

CERTIFICATIONS:
DHW

Code	Size A	Size B	Box	Carton	Cat.
00810000	RBM	RBM	10	10	09.01

Standard RBM thread W 24.5x19 F

Series 83

In-line fitting for joining copper, polyethylene and multilayer metal-plastic pipes.

Nickel-plated brass body.
Threaded connection:
M UNI-EN-ISO 228 (A)
M standard RBM (Standard RBM thread W24,5x19F) (B)

- Max operating temperature 110 °C
- Max operating pressure 10 Bar

CERTIFICATIONS:
DHW

Code	Size A	Size B	Box	Carton	Cat.
00830300	G 3/8" M	RBM	10	10	09.01
00830400	G 1/2" M	RBM	10	10	09.01

Standard RBM thread W 24.5x19 F

Adapter piece iron pipe valves for copper or plyethylene pipe.

Series 3576

Copper pipe adapter for 1/2" iron connection valves.

Nickel-plated brass ogive presser.
Brass ogive and adapter.
Threaded connection M UNI-EN-ISO 228.

- Max operating temperature 110 °C
- Max operating pressure 10 Bar

Code	Size A	Size B	Box	Carton	Cat.
35761050	1/2"	Ø 10	10	100	09.01
35761250	1/2"	Ø 12	10	100	09.01
35761450	1/2"	Ø 14	10	100	09.01

Series 263

Compression fitting for annealed copper pipe.

Brass ogive.
Nickel plated brass nut.
Elastomer seal ogive.
Euroconus F G3/4" threaded connection.

- Max operating temperature 95 °C
- Max operating pressure 10 Bar

Code	Size	Box	Carton	Cat.
02631220	Ø 12	10	100	09.01
02631520	Ø 15	10	100	09.01

Euroconus G 3/4" thread UNI-EN-ISO 228

Series 361

Compression fitting for annealed copper pipe.

Brass ogive.
Nickel plated brass nut.
Elastomer seal ogive.
Euroconus F G3/4" threaded connection.

- Max operating temperature 95 °C
- Max operating pressure 10 Bar

Code	Size A	Size B	Box	Carton	Cat.
03611000	G 3/4"	Ø 10	10	100	09.01
03611200	G 3/4"	Ø 12	10	100	09.01
03611400	G 3/4"	Ø 14	10	100	09.01
03611500	G 3/4"	Ø 15	10	100	09.01
03611600	G 3/4"	Ø 16	10	100	09.01
03611800	G 3/4"	Ø 18	10	100	09.01

Euroconus G 3/4" thread UNI-EN-ISO 228

Series 217.A

Compression fitting for polyethylene pipe.

Brass ogive.
Nickel plated brass nut.
Elastomer seal ring.
Euroconus F G3/4" threaded connection.

- Max operating temperature 95 °C
- Max operating pressure 10 Bar

CERTIFICATIONS:
DHW

Polyethylene pipe fitting

Code	Size	Box	Carton	Cat.
02171200	12x2	10	100	09.01
02171500	15x2	10	100	09.01
02171510	15x2,5	10	100	09.01
02171610	16x2,2	10	100	09.01
02171800	18x2	10	100	09.01
02172010	20x2,8	10	100	09.01

Euroconus G 3/4" thread UNI-EN-ISO 228
Size: Outside Ø x pipe thickness

Komo certified fitting for polyethylene pipe

Code	Size	Box	Carton	Cat.
02171660	16x2	10	100	09.01
02171760	17x2	10	100	09.01
02172060	20x2	10	100	09.01

Euroconus G 3/4" thread UNI-EN-ISO 228
Size: Outside Ø x pipe thickness

Series 123

Compression fitting for polyethylene pipe.

Brass ogive.
Nickel plated brass nut.
Elastomer seal ring.
Euroconus F G3/4" threaded connection.

- Max operating temperature 95 °C
- Max operating pressure 10 Bar

CERTIFICATIONS:
DHW

CSTB certification (QB) valid only in conjunction with CSTB-certified RBM KILMA-FLEX PE-RT pipe, series 988.

Code	Size	Box	Carton	Cat.
01231200	12x1,1	10	100	09.01
01231600	16x1,5	10	100	09.01
01232000	20x1,9	10	100	09.01

Euroconus G 3/4" thread UNI-EN-ISO 228
Size: Outside Ø x pipe thickness

Series 224.A

Compression fitting for metal-plastic multilayer pipe.

Compatible with Q-tec copper pipe with matching sizes.
Respect pipe flaring and gauging conditions.

Brass ogive.
Nickel plated brass nut.
Elastomer seal ring.
Euroconus F G3/4" threaded connection.

- Max operating temperature 95 °C
- Max operating pressure 10 Bar

CERTIFICATIONS:
DHW

Code	Size	Box	Carton	Cat.
02241400	14x2	10	100	09.01
02241610	16,2x2,6	10	100	09.01
02241620	16x2,25	10	100	09.01
02241700	17x2	10	100	09.01
02241800	18x2	10	100	09.01
02242030	20x2,25	10	100	09.01
02242010	20x2,5	10	100	09.01
02242020	20x2,9	10	100	09.01

Euroconus G 3/4" thread UNI-EN-ISO 228
Size: Outside Ø x pipe thickness

Series 222

In-line fitting for joining copper, polyethylene and multilayer metal-plastic pipes.

Nickel-plated brass body.
Threaded connections:
Euroconus M G3/4".
M 1/2" UNI-EN-ISO 228.

- Max operating temperature 110 °C
- Max operating pressure 10 Bar

CERTIFICATIONS:
DHW

Code	Size A	Size B	Box	Carton	Cat.
02220510	Euroconus	Euroconus	10	100	09.01
02220500	G 1/2"	Euroconus	10	100	09.01

Euroconus G 3/4" thread UNI-EN-ISO 228

Series 1401

Compression fitting for copper pipe.

Nickel-plated brass body.
Elastomer seals.
Standard RBM threaded F connection.

- Max operating temperature 110 °C
- Max operating pressure 10 Bar

Code	Size	Box	Carton	Cat.
14011200	RBM -Ø 12	10	100	09.01
14011600	RBM -Ø 16	10	100	09.01

Standard RBM thread W24.5x19F

Series 139

Compression fitting for copper pipe.

Nickel-plated brass body.
Elastomer seals.
F G1/2" threaded connection.

- Max operating temperature 110 °C
- Max operating pressure 10 Bar

Code	Size A	Size B	Box	Carton	Cat.
01391050	G 1/2"	Ø 10	10	100	09.01
01391250	G 1/2"	Ø 12	10	100	09.01
01391450	G 1/2"	Ø 14	10	100	09.01
01391550	G 1/2"	Ø 15	10	100	09.01

Tapered seat.
Used with extension lead code 164.04.X0 (see page 112)

Series 735

Compression fitting for polyethylene pipe, flat seat.

Nickel-plated brass body.
Elastomer seals.
F G1/2" threaded connection.

- Max operating temperature 110 °C
- Max operating pressure 10 Bar

CERTIFICATIONS:
DHW

Code	Size	Box	Carton	Cat.
07351200	12x1,1	10	100	09.01
07351600	16x1,5	10	100	09.01
07351610*	16x2	10	100	09.01
07351620*	16x2	10	100	09.01

*Can also be used for multilayer polyethylene pipe
Thread F G 1/2"

Flat seat.

Series 2796

Compression fitting for metal-plastic multilayer pipe.

Nickel-plated brass body.
Elastomer seals.
F G1/2" threaded connection.

- Max operating temperature 110 °C
- Max operating pressure 10 Bar

Code	Size	Box	Carton	Cat.
27961600	16x2	10	100	09.01

Thread F G 1/2"

Series 140

Blind side cap.

Nickel-plated brass body.
PTFE seals.
F G1/2" threaded connection.

- Max operating temperature 110 °C
- Max operating pressure 10 Bar

CERTIFICATIONS:
DHW

Code	Size	Box	Carton	Cat.
01400400	G 1/2"	10	40	09.01

Thread F G 1/2"

Flat seat.

Series 120

PN16 Threaded flange suited for connecting threaded PRV'S, filters and ball valves to flange distribution networks.

Nickel-plated brass body.
Threaded connection M UNI-EN-ISO 228.
Flanged connection suited for coupling with counter flange UNI EN 1092-1.

- Max operating temperature 150 °C

CERTIFICATIONS:
DHW

Code	Size A	Size B	Box	Carton	Cat.
01200900	2"	DN 50	2	2	09.01
01201000	2"1/2	DN 65	1	1	09.01
01201100	3"	DN 80	1	1	09.01
01201300	4"	DN 100	1	1	09.01

Flange suitable for coupling with counter-flange UNI EN 1092-1.
Floating flange

Series 42.A

RBM standard blind plug for manifold detachments.

Nickel-plated brass body.
PTFE seal.
Standard RBM threaded F connection.

- Max operating temperature 110 °C
- Max operating pressure 10 Bar

CERTIFICATIONS:
DHW

Code	Size	Box	Carton	Cat.
00420000	RBM	10	40	09.01

Standard RBM thread W 24.5x19 F

Series 240

G ¾" F blind plug for manifold detachments.

Nickel-plated brass body.
PTFE seal.
Euroconus F G3/4" threaded connection.

- Max operating temperature 110 °C
- Max operating pressure 10 Bar

CERTIFICATIONS:
DHW

Code	Size	Box	Carton	Cat.
02400500	G 3/4"	10	40	09.01

Euroconus G 3/4" thread UNI-EN-ISO 228

Series 242

Blind cap G1/2" M for manifold ways.

Brass body.
Elastomer seal.
Threaded connection M UNI-EN-ISO 228.

- Max operating temperature 110 °C
- Max operating pressure 10 Bar

CERTIFICATIONS:
DHW

Code	Size	Box	Carton	Cat.
02420400	1/2"	10	100	09.01

Used for manifolds with female G 1/2" junction female connections (code 35.0X.40).

Series 2944.B

Blind cap for fittings with standard RBM threaded connection.

Brass body.
Standard RBM threaded M connection.

- Max operating temperature 110 °C
- Max operating pressure 10 Bar

CERTIFICATIONS:
DHW

Code	Size	Box	Carton	Cat.
02944004	RBM	1	1	09.01

Standard RBM thread W 24.5 x 19 F

For testing system.

Series 57.A

Extension and reduction for RBM connection.

Nickel-plated brass body.
PTFE seal.
Threaded MF standard RBM connection.

- Max operating temperature 110 °C
- Max operating pressure 10 Bar

CERTIFICATIONS:
DHW

Code	Size	Box	Carton	Cat.
00571600*	RBM	10	100	09.01
00571800**	RBM	10	100	09.01

*Lengthens the standard RBM connection by 10 mm
**Makes it possible to use Ø18 copper pipes

Series 43.A

Fitting for side connection of valve to manifold.

Nickel-plated brass body.
PTFE seal.
Threaded F standard RBM connection F UNI-EN-ISO 228.

- Max operating temperature 110 °C
- Max operating pressure 10 Bar

CERTIFICATIONS:
DHW

Code	Size	Box	Carton	Cat.
00430300	G 3/8"	10	100	09.01
00430400	G 1/2"	10	100	09.01

Standard RBM thread W 24.5x19 F

Series 45

Pipe connection junction.

Nickel-plated brass body.
Threaded connections MF UNI-EN-ISO 228.

- Max operating temperature 110 °C
- Max operating pressure 10 Bar

CERTIFICATIONS:
DHW

Code	Size	Box	Carton	Cat.
00450500	G 3/4"	10	100	09.01

Series 42.B

Blind head cap for manifolds.

Nickel-plated brass body.
PTFE seal.
Threaded connection F UNI-EN-ISO 228.

- Max operating temperature 110 °C
- Max operating pressure 10 Bar

CERTIFICATIONS:
DHW

Code	Size	Box	Carton	Cat.
00420500	G 3/4"	10	100	09.01
00420600	G 1"	10	100	09.01

Series 42.C

Perforated head cap for manifolds.

Nickel-plated brass body.
PTFE seal.
Connection to manifold F UNI-EN-ISO 228.
F 3/8" head connection UNI-EN-ISO 228.

- Max operating temperature 110 °C
- Max operating pressure 10 Bar

CERTIFICATIONS:
DHW

Code	Size A	Size B	Box	Carton	Cat.
00420530	G 3/8"	G 3/4"	10	100	09.01
00420630	G 3/8"	G 1"	10	100	09.01

Series 43.B

Head connection for manifolds with copper or polyethylene fitting connection.

Nickel-plated brass body.
PTFE seal.
Threaded connections:
M standard RBM.
F UNI-EN-ISO 228.

- Max operating temperature 110 °C
- Max operating pressure 10 Bar

CERTIFICATIONS:
DHW

Code	Size	Box	Carton	Cat.
00430500	G 3/4"	10	100	09.01
00430600	G 1"	10	100	09.01

Standard RBM thread W 24.5x19 F

Series 56.A

Blind head cap for manifolds.

Nickel-plated brass body.
PTFE seal.
Threaded connection M UNI-EN-ISO 228.

- Max operating temperature 110 °C
- Max operating pressure 10 Bar

CERTIFICATIONS:
DHW

Code	Size	Box	Carton	Cat.
00560500	G 3/4"	10	100	09.01
00560600	G 1"	10	100	09.01
00560700	G 1"1/4	10	100	09.01

Series 56.B

Head connection for manifolds.

Nickel-plated brass body.
PTFE seal.
Connection to manifold M UNI-EN-ISO 228.
Head connection F 3/8" UNI-EN-ISO 228."

- Max operating temperature 110 °C
- Max operating pressure 10 Bar

CERTIFICATIONS:
DHW

Code	Size A	Size B	Box	Carton	Cat.
00560530	G 3/8"	G 3/4"	10	100	09.01
00560630	G 3/8"	G 1"	10	100	09.01

Series 57.B

Head connection for manifolds with copper or polyethylene fitting connection.

Nickel-plated brass body.
PTFE seal.
Threaded connections:
M standard RBM.
M UNI-EN-ISO 228.

- Max operating temperature 110 °C
- Max operating pressure 10 Bar

CERTIFICATIONS:
DHW

Code	Size	Box	Carton	Cat.
00570500	G 3/4"	10	100	09.01
00570600	G 1"	10	100	09.01

Standard RBM thread W 24.5x19 F

Series 178

Copper pipe adapter.

Nickel-plated brass body.
Elastomer O-Ring seal.
Threaded connection M UNI-EN-ISO 228.

- Max operating temperature 110 °C
- Max operating pressure 10 Bar

CERTIFICATIONS:
DHW

Code	Size A	Size B	Box	Carton	Cat.
01780400	1/2"	Ø 15	10	40	09.01
01780500	3/4"	Ø 22	10	40	09.01
01780600	1"	Ø 28	10	40	09.01

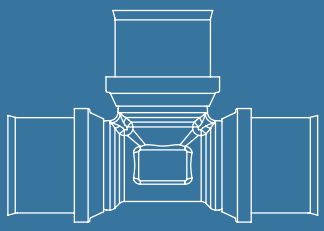

01.
HYDROTHERMAL
DISTRIBUTION

10. WATER DISTRIBUTION

10.01 MULTI-LAYER PIPES 124

PE-Xc plain multi-layer pipe
PE-Xc multi-layer thermally insulated pipe
PE-Xc multi-layer pipe with anti-condensation insulating
PE-RT plain multi-layer pipe
PE-RT multy-layer thermally coated pipe
PE-RT multi-layer pipe with anti-condensation insulating

10.02 FITTINGS FORM MULTI-LAYER PIPES 132

Press fittings for multi-layer pipes
Shut-off taps
Compression fittings for multi-layer pipes

10.01 MULTI-LAYER PIPES | PE-XC PLAIN MULTI-LAYER PIPE

Series 1542

Multilayer pipe for floor heating made of PE-Xc (cross-linked polyethylene), aluminum, PE-RT (polyethylene with increased thermal resistance). Aluminum layer welded head-to-head.

Multilayer pipe for floor heating made of PE-Xc (cross-linked polyethylene), aluminum, PE-RT (polyethylene with increased thermal resistance). Aluminum layer welded head-to-head.

- Composition PE-Xc/Al/PE-RT
- White
- Poper 10 Bar
- Tmal 95 °C
- Duration at operating conditions ~ 50 years
- Type: PE-Xc

CERTIFICATIONS:

Compliant with: EN ISO 21003 - DM 174/04

PE-Xc RBM Tita-fix multilayer pipe in roll

Code	Pipe size (mm)	Aluminium th. (mm)	Roll (m)	Box (m)	Pallet (m)	Cat.
15421600	16x2	0,20	100	100	1400	10.01
15421640	16x2	0,20	250	250	2500	10.01
15421630	16x2	0,20	500	500	3000	10.01
15422000	20x2	0,30	100	100	1400	10.01
15422600	26x3	0,40	50	50	550	10.01
15423200	32x3	0,40	50	50	600	10.01

Size: Outside Ø x pipe thickness

PE-Xc RBM Tita-fix multilayer pipe in bars

Code	Pipe size (mm)	Aluminium th. (mm)	Bar (m)	Box (m)	Cat.
15431600	16x2	0,20	4	100	10.01
15432000	20x2	0,30	4	76	10.01
15432600	26x3	0,40	4	40	10.01
15433200	32x3	0,40	4	24	10.01

Size: Outside Ø x pipe thickness

The entire package must be ordered.

10.01 MULTI-LAYER PIPES | PE-XC MULTI-LAYER THERMALLY COATED PIPE

Series 1541.B

PE-Xc RBM Tita-fix multilayer pipe externally insulated with closed cell expanded polyethylene conduit, CFC-free, flame retardant.

Pipe features:
- Composition PE-Xc/Al/PE-RT
- White
- Poper 10 Bar
- Tmal 95 °C
- Duration at operating conditions ~ 50 years
- Type: PE-Xc

Insulating conduit features:
- Density 35 kg/m³
- Thermal conductivity at 40 °C
- Insulation: 0.038 W/mK
- insulation + pipe (average value): 0.069 W/mK
- Steam permeability μ 5.482
- Insulation thickness 6 mm

CERTIFICATIONS:

Compliant with: EN ISO 21003 - DM 174/04

Conduit thickness compliant with law 9 January 1991 n. 10 and valid for pipes installed in heated premises and/or facilities neither facing outside or unheated rooms.

Code	Pipe size (mm)	Aluminium th. (mm)	Roll (m)	Box (m)	Pallet (m)	Cat.
15411650*	16x2	0,20	50	1	750	10.01
15412050	20x2	0,30	50	1	650	10.01
15412650	26x3	0,40	50	1	600	10.01
15413250	32x3	0,40	25	1	300	10.01

Size: Outside Ø x pipe thickness
* Insulation thickness compliant with law 09 January 1991 n. 10 and valid for pipes installed in heated premises and/or facilities neither facing outside or unheated rooms.

Suitable for heating and domestic hot water distribution systems.

10.01 MULTI-LAYER PIPES | PE-XC MULTI-LAYER PIPE WITH ANTI-CONDENSATION COATING

Series 1541.C

PE-Xc RBM Tita-fix multilayer pipe externally insulated with closed cell expanded polyethylene (anti-condensation), CFC-free, flame retardant.

Pipe features:
- Composition PE-Xc/Al/PE-RT
- White
- Poper 10 Bar
- Tmal 95 °C
- Duration at operating conditions ~ 50 years
- Type: PE-Xc

Insulating conduit features:
- Density 35 kg/m³
- Thermal conductivity at 40 °C
- Insulation 0.038 W/mK
- insulation+pipe (average value) 0.062 W/mK
- Steam permeability μ 5.482
- Insulation thickness 10 mm

CERTIFICATIONS:

Compliant with: EN ISO 21003 - DM 174/04

Insulation thickness compliant with law 09 January 1991 n. 10 and valid for pipes installed in heated premises and/or facilities neither facing outside or unheated rooms.

Code	Pipe size (mm)	Aluminium th. (mm)	Roll (m)	Box (m)	Pallet (m)	Cat.
15411640	16x2	0,20	50	1	550	10.01
15412040	20x2	0,30	50	1	450	10.01
15412640	26x3	0,40	50	1	450	10.01
15413240	32x3	0,40	25	1	250	10.01

Size: Outside Ø x pipe thickness

Suitable for hydronic refrigeration and heating systems

Series 1541.A

PE-Xc RBM Tita-fix multilayer pipe, protected externally with polypropylene corrugated conduit.

Pipe features:
- Composition PE-Xc/Al/PE-RT
- White
- Poper 10 Bar
- Tmal 95 °C
- Duration at operating conditions ~ 50 years
- Type: PE-Xc

Corrugated conduit features:
- outside diameter of pipe 16x2: 25 mm
- outside diameter of pipe 20x2: 32 mm

CERTIFICATIONS:

Compliant with: EN ISO 21003 - DM 174/04

PE-Xc RBM Tita-fix multilayer pipe in roll with protective corrugated conduit - Blue

Code	Pipe size (mm)	Aluminium th. (mm)	Roll (m)	Box (m)	Pallet (m)	Cat.
15412080	20x2	0,30	50	1	650	10.01

PE-Xc RBM Tita-fix multilayer pipe in roll with protective corrugated conduit - Red

Code	Pipe size (mm)	Aluminium th. (mm)	Roll (m)	Box (m)	Pallet (m)	Cat.
15412090	20x2	0,30	50	1	650	10.01

Size: Outside Ø x pipe thickness

Suitable for domestic hot water distribution systems.

10.01 MULTI-LAYER PIPES | PE-RT PLAIN MULTI-LAYER PIPE

Series 1545

Multilayer underfloor heating pipe made of PE-RT (polyethylene with increased heat resistance), aluminum, PE-RT. Head-to-head welded aluminum layer.

- Composition PE-RT/Al/PE-RT
- White
- Poper 10 Bar
- Tmal 95 °C
- Duration at operating conditions ~ 50 years
- Type: PE-RT

CERTIFICATIONS:

Compliant with: EN ISO 21003 - DM 174/04

PE-RT RBM Tita-fix multilayer pipe in roll

Code	Pipe size (mm)	Aluminium th. (mm)	Roll (m)	Box (m)	Pallet (m)	Cat.
15451600	16x2	0,20	100	100	1400	10.01
15451620	16x2	0,20	250	250	2500	10.01
15451610	16x2	0,20	500	500	3000	10.01
15452000	20x2	0,30	100	100	1400	10.01
15452010	20x2	0,30	250	250	1750	10.01
15452050	20x2	0,30	500	500	2500	10.01
15452600	26x3	0,40	50	1	550	10.01
15453200	32x3	0,40	50	1	600	10.01
15454000	40x3,5	0,50	25	1	300	10.01

Size: Outside Ø x pipe thickness

PE-RT RBM Tita-fix multilayer pipe in bars

Code	Pipe size (mm)	Aluminium th. (mm)	Bar (m)	Box (m)	Pallet (m)	Cat.
15461600	16x2	0,20	4	100	-	10.01
15462000	20x2	0,30	4	76	-	10.01
15462600	26x3	0,40	4	40	-	10.01
15463200	32x3	0,40	4	24	-	10.01
15464000	40x3,5	0,50	5	50	800	10.01
15465000	50x4	0,60	5	15	500	10.01
15466300	63x4,5	0,80	5	5	385	10.01

Size: Outside Ø x pipe thickness

10.01 MULTI-LAYER PIPES | PE-RT MULTI-LAYER THERMALLY COATED PIPE

Series 1544.B

PE-RT RBM Tita-fix multilayer pipe externally insulated with closed cell expanded polyethylene, CFC-free, flame retardant.

Pipe features:
- Composition PE-RT/Al/PE-RT
- White
- Poper 10 Bar
- Tmal 95 °C
- Duration at operating conditions ~ 50 years
- Type: PE-RT

Insulating conduit features:
- Density 35 kg/m³
- Thermal conductivity at 40 °C
- Insulation: 0.038 W/mK
- insulation + pipe (average value): 0.069 W/mK
- Steam permeability μ 5.482
- Insulation thickness 6 mm
- Type: PE-RT

CERTIFICATIONS:

Compliant with: EN ISO 21003 - DM 174/04

Conduit thickness compliant with law 9 January 1991 n. 10 and valid for pipes installed in heated premises and/or facilities neither facing outside or unheated rooms.

PE-RT RBM Tita-fix multilayer pipe in roll with thermal insulation - Grey

Code	Pipe size (mm)	Aluminium th. (mm)	Roll (m)	Box (m)	Pallet (m)	Cat.
15441650*	16x2	0,20	50	1	750	10.01
15442050	20x2	0,30	50	1	650	10.01
15442650	26x3	0,40	50	1	600	10.01
15443250	32x3	0,40	25	1	300	10.01

PE-RT RBM Tita-fix multilayer pipe in roll with thermal insulation - Blue

Code	Pipe size (mm)	Aluminium th. (mm)	Roll (m)	Box (m)	Pallet (m)	Cat.
19461620*	16x2	0,20	50	1	750	10.01
19462020	20x2	0,30	50	1	650	10.01
19462620	26x3	0,40	50	1	600	10.01
19463220	32x3	0,40	25	1	300	10.01

PE-RT RBM Tita-fix multilayer pipe in roll with thermal insulation - Red

Code	Pipe size (mm)	Aluminium th. (mm)	Roll (m)	Box (m)	Pallet (m)	Cat.
19461630*	16x2	0,20	50	1	750	10.01
19462030	20x2	0,30	50	1	650	10.01
19462630	26x3	0,40	50	1	600	10.01
19463230	32x3	0,40	25	1	300	10.01

Size: Outside Ø x pipe thickness
* Insulation thickness compliant with law 09 January 1991 n. 10 and valid for pipes installed in heated premises and/or facilities neither facing outside or unheated rooms.

Suitable for heating and domestic hot water distribution systems.

Series 1544.C

PE-RT RBM Tita-fix multilayer pipe externally insulated with closed cell expanded polyethylene anti-condensation, CFC-free, flame retardant.

Pipe features:
- Composition PE-RT/Al/PE-RT
- White
- Poper 10 Bar
- Tmal 95 °C
- Duration at operating conditions ~ 50 years
- Type: PE-RT

Insulating conduit features:
- Density 35 kg/m³
- Thermal conductivity at 40 °C
- Insulation 0.038 W/mK
- insulation+pipe (average value) 0.062 W/mK
- Steam permeability μ 5.482
- Insulation thickness 10 mm

CERTIFICATIONS:

Compliant with: EN ISO 21003 - DM 174/04

Insulation thickness compliant with law 09 January 1991 n. 10 and valid for pipes installed in heated premises and/or facilities neither facing outside or unheated rooms.

Code	Pipe size (mm)	Aluminium th. (mm)	Roll (m)	Box (m)	Pallet (m)	Cat.
15441640	16x2	0,20	50	1	550	10.01
15442040	20x2	0,30	50	1	450	10.01
15442640	26x3	0,40	50	1	450	10.01
15443240	32x3	0,40	25	1	250	10.01

Size: Outside Ø x pipe thickness

Suitable for hydronic refrigeration and heating systems.

Series 1544.A

PE-RT RBM Tita-fix multilayer pipe, protected externally with polypropylene corrugated conduit.

Pipe features:
- Composition PE-RT/Al/PE-RT
- White
- Poper 10 Bar
- Tmal 95 °C
- Duration at operating conditions ~ 50 years
- Type: PE-RT

Corrugated conduit features:
- outside diameter of pipe 16x2: 25 mm
- outside diameter of pipe 20x2: 32 mm
- Type: PE-RT

CERTIFICATIONS:

Compliant with: EN ISO 21003 - DM 174/04

PE-RT RBM Tita-fix multilayer pipe in roll with protective corrugated conduit - Blue

Code	Pipe size (mm)	Aluminium th. (mm)	Roll (m)	Box (m)	Pallet (m)	Cat.
15441680	16x2	0,20	50	1	700	10.01
15442080	20x2	0,30	50	1	650	10.01

PE-RT RBM Tita-fix multilayer pipe in roll with protective corrugated conduit - Red

Code	Pipe size (mm)	Aluminium th. (mm)	Roll (m)	Box (m)	Pallet (m)	Cat.
15441690	16x2	0,20	50	1	700	10.01
15442090	20x2	0,30	50	1	650	10.01

Size: Outside Ø x pipe thickness

Suitable for domestic hot water distribution systems.

RBM TITA-FIX

Hydrothermal distribution system

Due to its mechanical properties and geometric stability, **RBM Tita-Fix** pipe can be used in a variety of thermo-technical and plumbing applications in the civil and industrial sector, such as heating and sanitary installations.

It consists of an inner polyethylene layer covered with a middle aluminium layer, which makes the multilayer pipe impermeable to oxygen infiltration, and of an outer polyethylene layer, which protects the aluminium. The **RBM Tita-Fix** pipe offers in a single product, the best traditions of reliability and solidity of metal pipes and the installation convenience of plastic pipes.

The 'TIG - butt' welding of the aluminium strip, a special feature of the R**BM Tita-Fix** pipe, is able to guarantee the pipe maximum strength and reliability, combined with lightness and flexibility.

1. **Internal polyethylene layer (PE-Xc - PE-RT)**
2. **Intermediate aluminium layer**
3. **Adhesive layer**
4. **External polyethylene layer (PE-RT)**

TESTING

Prior to the final bricklaying of the installation, it is mandatory to test both the sanitary and heating installations. Below are the titles of the reference standards setting out the testing criteria, referring you to reading the full text:

UNI 5364:1976
"Hot water heating systems. Rules for tender submission and acceptance"

UNI 9182:2008
"Cold and hot water supply and distribution systems. Design, testing and management criteria."

UNI EN 1264-4:2003
"Underfloor Heating - Systems and Components - Installation."

DIN 1988-1
"Drinking water supply system; general (DVGW code of practice)."

QUALITY CONTROL

For effective quality control, RBM Tita-Fix pipes are tested before sale with helium gas to find even the smallest leaks

PEELING TEST

Through the 'peeling test', the adhesion of the plastic layers to the aluminium interlayer is measured and monitored; the test is carried out for each production batch.

FLARING

A conical punch is inserted into the end section of the pipe, and the pipe is expanded by at least 10% compared to the original diameter; the test is carried out for each production batch.

TESTING FOR OBSTRUCTIONS

Once the roll has been produced, the entire length of the roll is traversed by a steel ball, which makes it possible to check for internal obstructions.

FURTHER PRODUCT TESTING

In our laboratories, we carry out all the tests required by the main standards to verify the quality of the pipe and the tightness of the pipe-connection system, such as, for example:

- pressure cycles
- thermal cycles
- vacuum test
- pull-out resistance, etc

In production, controls are constant, both during the extrusion phase and afterwards

01.
HYDROTHERMAL
DISTRIBUTION

10. WATER DISTRIBUTION

10.02 FITTINGS FOR MULTI-LAYER PIPES

Press fittings for multi-layer pipes
Shut-off taps
Compression fittings for multi-layer pipes

10.02 FITTINGS FOR MULTI-LAYER PIPES | PRESS FITTINGS FOR MULTI-LAYER PIPES

Series 812

Press fitting for multilayer pipe - rotary nut - flat seat gas thread

Multi-clamp fitting.
Compatible with clamps series:
- TH, H, U, B, F for Ø 16x2 - 18x2 and 20x2;
- TH, H, B for Ø 26x3;
- TH, H for Ø 32x3;

Externally nickel-plated brass body
Elastomer seals
Stainless steel pipe clamping bush
Dielectric pipe clamp cover in PE
Threaded connection UNI-EN-ISO 228
Max operating temperature 95 °C
Max operating pressure 10 Bar

CERTIFICATIONS:
DHW

Code	Size A	Size B	Box	Carton	Cat.
08121610	16x2	3/8" F	10	200	10.02
08121620	16x2	1/2" F	10	200	10.02
08121630	16x2	3/4" F	10	160	10.02
08121830	18x2	3/4" F	10	160	10.02
08122020	20x2	1/2" F	10	160	10.02
08122030	20x2	3/4" F	10	160	10.02
08122630	26x3	3/4" F	10	100	10.02
08122640	26x3	1" F	10	100	10.02
08122650	26x3	1"1/4 F	1	50	10.02
08123240	32x3	1" F	10	80	10.02
08123250	32x3	1"1/4 F	10	80	10.02

Size A: Outside Ø x pipe thickness
Size B: thread UNI-EN-ISO 228

Series 963

Press fitting for metal-plastic multilayer pipe.

Multi-clamp fitting.
Compatible with clamps series:
- TH, H, U, B, F for Ø 16x2 - 18x2 and 20x2;
- TH, H, B for Ø 26x3;
- TH, H for Ø 32x3;
- TH for Ø 40x3.5 - 50x4 e 63x4.5

Externally nickel-plated brass body
Elastomer seals
Stainless steel pipe clamping bush
Dielectric pipe clamp cover in PE
Euroconus threaded connection G3/4" UNI-EN-ISO 228
Max operating temperature 95 °C
Max operating pressure 10 Bar

CERTIFICATIONS:
DHW

Code	Size A	Size B	Box	Carton	Cat.
09631630	16x2	Euroconus	10	100	10.02
09631830	18x2	Euroconus	10	100	10.02
09632030	20x2	Euroconus	10	100	10.02
09632630	26x3	Euroconus	10	50	10.02

Size A: Outside Ø x pipe thickness
Size B: thread UNI-EN-ISO 228

Series 826

Gas press fitting for metal-plastic multilayer pipe - rotary nut - standard RBM thread

Multi-clamp fitting.
Compatible with clamps series:
- TH, H, U, B, F for Ø 16x2 - 18x2 and 20x2;
- TH, H, B for Ø 26x3;
- TH, H for Ø 32x3;
- TH for Ø 40x3.5 - 50x4 e 63x4.5

Externally nickel-plated brass body
Elastomer seals
Stainless steel pipe clamping bush
Dielectric pipe clamp cover in PE
Standard RBM threaded connection W24.5x19F
Max operating temperature 95 °C
Max operating pressure 10 Bar

CERTIFICATIONS:
DHW

Code	Size A	Size B	Box	Carton	Cat.
08261600	16x2	RBM	10	100	10.02
08261800	18x2	RBM	10	100	10.02
08262000	20x2	RBM	10	100	10.02

Size A: Outside Ø x pipe thickness
Size B: RBM standard thread W24.5x19F

Series 671

Press fitting for multilayer pipe - straight - intermediate

Multi-clamp fitting.
Compatible with clamps series:
- TH, H, U, B, F for Ø 16x2 - 18x2 and 20x2;
- TH, H, B for Ø 26x3;
- TH, H for Ø 32x3;
- TH for Ø 40x3.5 - 50x4 e 63x4.5

Externally nickel-plated brass body
Elastomer seals
Stainless steel pipe clamping bush
Dielectric pipe clamp cover in PE
Max operating temperature 95 °C
Max operating pressure 10 Bar

CERTIFICATIONS:
DHW

Code	Size A	Box	Carton	Cat.
06711600	16x2	10	240	10.02
06711800	18x2	10	200	10.02
06712000	20x2	10	200	10.02
06712600	26x3	10	120	10.02
06713200	32x3	5	100	10.02
06714000	40x3,5	5	60	10.02
06715000	50x4	4	40	10.02
06716300	63x4,5	3	18	10.02

Size A: Outside Ø x pipe thickness
Size B: thread W28x19F

Series 672

Press fitting for multilayer pipe - straight - female gas connection

Multi-clamp fitting.
Compatible with clamps series:
- TH, H, U, B, F for Ø 16x2 - 18x2 and 20x2;
- TH, H, B for Ø 26x3;
- TH, H for Ø 32x3;
- TH for Ø 40x3.5 - 50x4 e 63x4.5

Externally nickel-plated brass body
Elastomer seals
Stainless steel pipe clamping bush
Dielectric pipe clamp cover in PE
Straight threaded connection F UNI-EN-ISO 228
Max operating temperature 95 °C
Max operating pressure 10 Bar

CERTIFICATIONS:
DHW

Code	Size A	Size B	Box	Carton	Cat.
06721620	16x2	1/2" F	10	200	10.02
06721630	16x2	3/4" F	10	160	10.02
06721820	18x2	1/2" F	10	200	10.02
06721830	18x2	3/4" F	10	160	10.02
06722020	20x2	1/2" F	10	200	10.02
06722030	20x2	3/4" F	10	160	10.02
06722630	26x3	3/4" F	10	100	10.02
06722640	26x3	1" F	10	100	10.02
06723240	32x3	1" F	5	80	10.02
06724040	40x3,5	1" F	5	40	10.02
06724050	40x3,5	1"1/4 F	5	40	10.02
06725060	50x4	1"1/2 F	5	20	10.02
06726370	63x4,5	2" F	1	16	10.02

Size A: Outside Ø x pipe thickness
Size B: thread UNI-EN-ISO 228

10.02 FITTINGS FOR MULTI-LAYER PIPES | PRESS FITTINGS FOR MULTI-LAYER PIPES

Series 673

Press fitting for multilayer pipe - straight - male gas connection

Multi-clamp fitting.
Compatible with clamps series:
- TH, H, U, B, F for Ø 16x2 - 18x2 and 20x2;
- TH, H, B for Ø 26x3;
- TH, H for Ø 32x3;
- TH for Ø 40x3.5 - 50x4 e 63x4.5

Externally nickel-plated brass body
Elastomer seals
Stainless steel pipe clamping bush
Dielectric pipe clamp cover in PE
Straight threaded connection M UNI-EN-ISO 228
Max operating temperature 95 °C
Max operating pressure 10 Bar

CERTIFICATIONS:
DHW

Code	Size A	Size B	Box	Carton	Cat.
06731610	16x2	3/8" M	10	240	10.02
06731620	16x2	1/2" M	10	240	10.02
06731630	16x2	3/4" M	10	200	10.02
06731820	18x2	1/2" M	10	200	10.02
06731830	18x2	3/4" M	10	200	10.02
06732020	20x2	1/2" M	10	200	10.02
06732030	20x2	3/4" M	10	200	10.02
06732630	26x3	3/4" M	10	120	10.02
06732640	26x3	1" M	10	120	10.02
06733240	32x3	1" M	5	100	10.02
06734050	40x3,5	1"1/4 M	5	60	10.02
06735060	50x4	1"1/2 M	5	40	10.02
06736370	63x4,5	2" M	1	40	10.02

Size A: Outside Ø x pipe thickness
Size B: thread UNI-EN-ISO 228

Series 674

Press fitting for multilayer pipe - angle - intermediate

Multi-clamp fitting.
Compatible with clamps series:
- TH, H, U, B, F for Ø 16x2 - 18x2 and 20x2;
- TH, H, B for Ø 26x3;
- TH, H for Ø 32x3;
- TH for Ø 40x3.5 - 50x4 e 63x4.5

Externally nickel-plated brass body
Elastomer seals
Stainless steel pipe clamping bush
Dielectric pipe clamp cover in PE
Max operating temperature 95 °C
Max operating pressure 10 Bar

CERTIFICATIONS:
DHW

Code	Size A	Box	Carton	Cat.
06741600	16x2	10	160	10.02
06741800	18x2	10	160	10.02
06742000	20x2	10	160	10.02
06742600	26x3	5	80	10.02
06743200	32x3	5	60	10.02
06744000	40x3,5	5	40	10.02
06745000	50x4	1	16	10.02
06746300	63x4,5	1	16	10.02

Size A: Outside Ø x pipe thickness

10.02 FITTINGS FOR MULTI-LAYER PIPES | PRESS FITTINGS FOR MULTI-LAYER PIPES

Series 675

Press fitting for multilayer pipe - angle - female gas connection

Multi-clamp fitting.
Compatible with clamps series:
- TH, H, U, B, F for Ø 16x2 - 18x2 and 20x2;
- TH, H, B for Ø 26x3;
- TH, H for Ø 32x3;
- TH for Ø 40x3.5 - 50x4 e 63x4.5

Externally nickel-plated brass body
Elastomer seals
Stainless steel pipe clamping bush
Dielectric pipe clamp cover in PE
Angle threaded connection F UNI-EN-ISO 228
Max operating temperature 95 °C
Max operating pressure 10 Bar

CERTIFICATIONS:
DHW

Code	Size A	Size B	Box	Carton	Cat.
06751620	16x2	1/2" F	10	200	10.02
06751820	18x2	1/2" F	10	160	10.02
06751830	18x2	3/4" F	10	160	10.02
06752020	20x2	1/2" F	10	160	10.02
06752030	20x2	3/4" F	10	120	10.02
06752630	26x3	3/4" F	5	80	10.02
06752640	26x3	1" F	5	50	10.02
06753240	32x3	1" F	5	60	10.02
06754050	40x3,5	1"1/4 F	5	40	10.02
06755060	50x4	1"1/2 F	1	20	10.02

Size A: Outside Ø x pipe thickness
Size B: thread UNI-EN-ISO 228

Series 676

Press fitting for multilayer pipe - angle - male gas connection

Multi-clamp fitting.
Compatible with clamps series:
- TH, H, U, B, F for Ø 16x2 - 18x2 and 20x2;
- TH, H, B for Ø 26x3;
- TH, H for Ø 32x3;
- TH for Ø 40x3.5 - 50x4 e 63x4.5

Externally nickel-plated brass body
Elastomer seals
Stainless steel pipe clamping bush
Dielectric pipe clamp cover in PE
Angle threaded connection M UNI-EN-ISO 228
Max operating temperature 95 °C
Max operating pressure 10 Bar

CERTIFICATIONS:
DHW

Code	Size A	Size B	Box	Carton	Cat.
06761610	16x2	3/8" M	10	200	10.02
06761620	16x2	1/2" M	10	200	10.02
06761820	18x2	1/2" M	10	200	10.02
06761830	18x2	3/4" M	10	160	10.02
06762020	20x2	1/2" M	10	160	10.02
06762030	20x2	3/4" M	10	160	10.02
06762630	26x3	3/4" M	10	80	10.02
06762640	26x3	1" M	5	50	10.02
06763240	32x3	1" M	5	60	10.02
06764050	40x3,5	1"1/4" M	5	32	10.02

Size A: Outside Ø x pipe thickness
Size B: thread UNI-EN-ISO 228

Series 677

Press fitting for multilayer pipe - T-shaped - intermediate

Multi-clamp fitting.
Compatible with clamps series:
- TH, H, U, B, F for Ø 16x2 - 18x2 and 20x2;
- TH, H, B for Ø 26x3;
- TH, H for Ø 32x3;
- TH for Ø 40x3.5 - 50x4 e 63x4.5

Externally nickel-plated brass body
Elastomer seals
Stainless steel pipe clamping bush
Dielectric pipe clamp cover in PE
Max operating temperature 95 °C
Max operating pressure 10 Bar

CERTIFICATIONS:
DHW

Code	Size A	Box	Carton	Cat.
06771600	16x2	10	120	10.02
06771800	18x2	5	80	10.02
06772000	20x2	10	80	10.02
06772600	26x3	5	40	10.02
06773200	32x3	5	40	10.02
06774000	40x3,5	5	20	10.02
06775000	50x4	1	8	10.02
06776300	63x4,5	1	8	10.02

Size A: Outside Ø x pipe thickness

Series 678

Press fitting for multilayer pipe - T-shaped - gas central female connection

Multi-clamp fitting.
Compatible with clamps series:
- TH, H, U, B, F for Ø 16x2 - 18x2 and 20x2;
- TH, H, B for Ø 26x3;
- TH, H for Ø 32x3;
- TH for Ø 40x3.5 - 50x4 e 63x4.5

Externally nickel-plated brass body
Elastomer seals
Stainless steel pipe clamping bush
Dielectric pipe clamp cover in PE
Threaded connection F UNI-EN-ISO 228
Max operating temperature 95 °C
Max operating pressure 10 Bar

CERTIFICATIONS:
DHW

Code	Size A	Size B	Box	Carton	Cat.
06781620	16x2	1/2" F	10	120	10.02
06781820	18x2	1/2" F	5	80	10.02
06781830	18x2	3/4" F	5	80	10.02
06782020	20x2	1/2" F	10	80	10.02
06782030	20x2	3/4" F	10	80	10.02
06782630	26x3	3/4" F	5	60	10.02
06783230	32x3	3/4" F	5	40	10.02
06783240	32x3	1" F	5	40	10.02
06784040	40x3,5	1" F	5	20	10.02
06784050	40x3,5	1"1/4 F	5	24	10.02
06785040	50x4	1" F	1	12	10.02

Size A: Outside Ø x pipe thickness
Size B: thread UNI-EN-ISO 228

Series 679

Press fitting for multilayer pipe - T-shaped - gas side female connection -double branch.

Multi-clamp fitting.
Compatible with clamps series:
- TH, H, U, B, F for Ø 16x2 - 18x2 and 20x2;
- TH, H, B for Ø 26x3;
- TH, H for Ø 32x3;
- TH for Ø 40x3.5 - 50x4 e 63x4.5

Externally nickel-plated brass body
Elastomer seals
Stainless steel pipe clamping bush
Dielectric pipe clamp cover in PE
Threaded connection F UNI-EN-ISO 228
Max operating temperature 95 °C
Max operating pressure 10 Bar

CERTIFICATIONS:
DHW

Code	Size A	Size B	Box	Carton	Cat.
06791620	16x2	1/2" F	10	60	10.02
06791820	18x2	1/2" F	10	60	10.02
06791830	18x2	3/4" F	10	60	10.02
06792020	20x2	1/2" F	10	60	10.02
06792030	20x2	3/4" F	10	60	10.02
06792630	26x3	3/4" F	10	40	10.02
06793240	32x3	1" F	5	30	10.02

Size A: Outside Ø x pipe thickness
Size B: thread UNI-EN-ISO 228

Series 680

Press fitting for multilayer pipe - T-shaped - gas central male connection

Multi-clamp fitting.
Compatible with clamps series:
- TH, H, U, B, F for Ø 16x2 - 18x2 and 20x2;
- TH, H, B for Ø 26x3;
- TH, H for Ø 32x3;
- TH for Ø 40x3.5 - 50x4 e 63x4.5

Externally nickel-plated brass body
Elastomer seals
Stainless steel pipe clamping bush
Dielectric pipe clamp cover in PE
Threaded connection M UNI-EN-ISO 228
Max operating temperature 95 °C
Max operating pressure 10 Bar

CERTIFICATIONS:
DHW

Code	Size A	Size B	Box	Carton	Cat.
06801620	16x2	1/2" M	10	120	10.02
06801820	18x2	1/2" M	10	80	10.02
06801830	18x2	3/4" M	10	80	10.02
06802020	20x2	1/2" M	10	80	10.02
06802030	20x2	3/4" M	10	80	10.02
06802630	26x3	3/4" M	5	60	10.02
06802640	26x3	1" M	5	60	10.02
06803230	32x3	3/4" M	5	40	10.02
06803240	32x3	1" M	5	40	10.02
06804040	40x3,5	1" M	5	20	10.02
06804050	40x3,5	1"1/4 M	5	20	10.02

Size A: Outside Ø x pipe thickness
Size B: thread UNI-EN-ISO 228

Series 890

Press fitting for multilayer pipe - straight - reduced way.

Multi-clamp fitting.
Compatible with clamps series:
- TH, H, U, B, F for Ø 16x2 - 18x2 and 20x2;
- TH, H, B for Ø 26x3;
- TH, H for Ø 32x3;
- TH for Ø 40x3.5 - 50x4 e 63x4.5

Externally nickel-plated brass body
Elastomer seals
Stainless steel pipe clamping bush
Dielectric pipe clamp cover in PE
Max operating pressure 95°C
Max operating pressure 10 Bar

CERTIFICATIONS:
DHW

Code	Size A	Size B	Box	Carton	Cat.
08901810	18x2	16x2	10	240	10.02
08902010	20x2	16x2	10	240	10.02
08902020	20x2	18x2	10	240	10.02
08902600	26x3	16x2	10	160	10.02
08902610	26x3	18x2	10	160	10.02
08902620	26x3	20x2	10	160	10.02
08903200	32x3	16x2	5	120	10.02
08903210	32x3	20x2	5	120	10.02
08903220	32x3	26x3	5	120	10.02
08904010	40x3,5	32x3	5	40	10.02
08905010	50x4	32x3	5	40	10.02
08905000	50x4	40x3,5	5	40	10.02
08906310	63x4,5	40x3,5	1	4	10.02
08906300	63x4,5	50x4	1	4	10.02

Size A-B: Outside Ø x pipe thickness

Series 851.A

Press fitting for multilayer pipe - T-shaped - reduced lateral way

Multi-clamp fitting.
Compatible with clamps series:
- TH, H, U, B, F for Ø 16x2 - 18x2 and 20x2;
- TH, H, B for Ø 26x3;
- TH, H for Ø 32x3;
- TH for Ø 40x3.5 - 50x4 e 63x4.5

Externally nickel-plated brass body
Elastomer seals
Stainless steel pipe clamping bush
Dielectric pipe clamp cover in PE
Max operating pressure 95°C
Max operating pressure 10 Bar

CERTIFICATIONS:
DHW

Code	Size A	Size B	Box	Carton	Cat.
08512010	20x2	16x2	10	80	10.02
08512610	26x3	16x2	5	60	10.02
08512620	26x3	20x2	5	60	10.02
08513210	32x3	16x2	5	40	10.02
08513200	32x3	20x2	5	40	10.02
08513220	32x3	26x3	5	40	10.02

Size A-B: Outside Ø x pipe thickness

Series 851.B

Press fitting for multilayer pipe - T-shaped - reduced central way

Multi-clamp fitting.
Compatible with clamps series:
- TH, H, U, B, F for Ø 16x2 - 18x2 and 20x2;
- TH, H, B for Ø 26x3;
- TH, H for Ø 32x3;
- TH for Ø 40x3.5 - 50x4 e 63x4.5

Externally nickel-plated brass body
Elastomer seals
Stainless steel pipe clamping bush
Dielectric pipe clamp cover in PE
Max operating pressure 95°C
Max operating pressure 10 Bar

CERTIFICATIONS:
DHW

Code	Size A	Size B	Box	Carton	Cat.
08511620	18x2	16x2	10	80	10.02
08511630	20x2	16x2	10	80	10.02
08511800	20x2	18x2	5	80	10.02
08511660	26x3	16x2	5	60	10.02
08511820	26x3	18x2	10	60	10.02
08512020	26x3	20x2	5	60	10.02
09331600	32x3	16x2	5	40	10.02
08511830	32x3	18x2	5	40	10.02
08512040	32x3	20x2	5	40	10.02
08512600	32x3	26x3	5	40	10.02
08514010	40x3,5	26x3	1	20	10.02
08514000	40x3,5	32x3	5	20	10.02
08515020	50x4	26x3	1	12	10.02
08515000	50x4	40x3,5	1	12	10.02
08516340	63x4,5	26x3	1	8	10.02
08516320	63x4,5	40x3,5	1	8	10.02

Size A-B: Outside Ø x pipe thickness

Series 851.C

Press fitting for multilayer pipe - T-shaped - reduced central and lateral way

Multi-clamp fitting.
Compatible with clamps series:
- TH, H, U, B, F for Ø 16x2 - 18x2 and 20x2;
- TH, H, B for Ø 26x3;
- TH, H for Ø 32x3;
- TH for Ø 40x3.5 - 50x4 e 63x4.5

Externally nickel-plated brass body
Elastomer seals
Stainless steel pipe clamping bush
Dielectric pipe clamp cover in PE
Max operating pressure 95°C
Max operating pressure 10 Bar

CERTIFICATIONS:

Code	Size A	Size B	Box	Carton	Cat.
08511640	18x2	16x2	10	80	10.02
08511610	20x2	16x2	10	80	10.02
08511810	20x2	18x2	5	80	10.02
08511690	26x3	16x2	5	60	10.02
08512070	26x3	20x2	5	60	10.02
08512090	32x3	20x2	5	40	10.02
08512640	32x3	26x3	5	40	10.02

Size A-B: Outside Ø x pipe thickness

Series 851.D

Press fitting for multilayer pipe - T-shaped - reduced lateral ways.

- Multi-clamp fitting.
- Compatible with clamps series:
- TH, H, U, B, F for Ø 16x2 - 18x2 and 20x2;
- TH, H, B for Ø 26x3;
- TH, H for Ø 32x3;
- TH for Ø 40x3.5 - 50x4 e 63x4.5

Externally nickel-plated brass body
Elastomer seals
Stainless steel pipe clamping bush
Dielectric pipe clamp cover in PE
Max operating pressure 95°C
Max operating pressure 10 Bar

CERTIFICATIONS:
DHW

Code	Size A	Size B	Box	Carton	Cat.
08511840	18x2	16x2	5	80	10.02
08512000	20x2	16x2	10	80	10.02
08512650	26x3	20x2	5	60	10.02
08513230	32x3	26x3	5	40	10.02

Size A-B: Outside Ø x pipe thickness

Series 999

Press fitting for multilayer "T" pipe - different connection diameters.

Multi-clamp fitting.
Compatible with clamps series:
- TH, H, U, B, F for Ø 16x2 - 18x2 and 20x2;
- TH, H, B for Ø 26x3;
- TH, H for Ø 32x3;
- TH for Ø 40x3.5 - 50x4 e 63x4.5

Externally nickel-plated brass body
Elastomer seals
Stainless steel pipe clamping bush
Dielectric pipe clamp cover in PE
Max operating pressure 95°C
Max operating pressure 10 Bar

CERTIFICATIONS:
DHW

Code	Size A	Size B	Size C	Box	Carton	Cat.
09992000	26x3	20x2	16x2	10	40	10.02

Size A-B-C: Outside Ø x pipe thickness

Series 853.A

Press fitting for multilayer pipe - flanged elbow - standard length - F Gas connection

Multi-clamp fitting.
Compatible with clamps series:
- TH, H, U, B, F for Ø 16x2 - 18x2 and 20x2;
- TH, H, B for Ø 26x3;
- TH, H for Ø 32x3;
- TH for Ø 40x3.5 - 50x4 e 63x4.5

Externally nickel-plated brass body
Elastomer seals
Stainless steel pipe clamping bush
Dielectric pipe clamp cover in PE
Threaded connection F UNI-EN-ISO 228
Max operating pressure 95°C
Max operating pressure 10 Bar

CERTIFICATIONS:
DHW

Code	Size A	Size B	Box	Carton	Cat.
08530400	16x2	1/2" F	10	60	10.02
08530420	18x2	1/2" F	10	60	10.02
08530410	20x2	1/2" F	10	60	10.02

Size A: Outside Ø x pipe thickness
Size B: thread UNI-EN-ISO 228

Fixing on specific Fixing Plate code 934.00.00

Series 4149.A

Press fitting for multilayer pipe - flanged elbow - standard length - F Gas connection

Multi-clamp fitting.
Compatible with clamps series:
- TH, H, U, B, F for Ø 16x2 - 18x2 and 20x2;
- TH, H, B for Ø 26x3;
- TH, H for Ø 32x3;
- TH for Ø 40x3.5 - 50x4 e 63x4.5

Externally nickel-plated brass body
Elastomer seals
Stainless steel pipe clamping bush
Dielectric pipe clamp cover in PE
Threaded connection F UNI-EN-ISO 228
Max operating pressure 95°C
Max operating pressure 10 Bar

CERTIFICATIONS:
DHW

Code	Size A	Size B	Box	Carton	Cat.
41490400	16x2	1/2" F	10	60	10.02
41490410	20x2	1/2" F	10	60	10.02
41490510	20x2	3/4" F	10	100	10.02

Size A: Outside Ø x pipe thickness

Fixing on specific Fixing Plate code 934.00.00

Series 4149.B

Press fitting for multilayer pipe - flanged elbow - XL 50 mm length - F Gas connection

Multi-clamp fitting.
Compatible with clamps series:
- TH, H, U, B, F for Ø 16x2 - 18x2 and 20x2;
- TH, H, B for Ø 26x3;
- TH, H for Ø 32x3;
- TH for Ø 40x3.5 - 50x4 e 63x4.5

Externally nickel-plated brass body
Elastomer seals
Stainless steel pipe clamping bush
Dielectric pipe clamp cover in PE
Threaded connection F UNI-EN-ISO 228
Max operating pressure 95°C
Max operating pressure 10 Bar

CERTIFICATIONS:
DHW

Code	Size A	Size B	Box	Carton	Cat.
41490490	16x2	1/2" F	5	40	10.02

Size A: Outside Ø x pipe thickness

Fixing on specific Fixing Plate code 934.00.00

Series 853.B

Press fitting for multilayer pipe - flanged elbow - XL length 77 mm - F Gas connection

Multi-clamp fitting.
Compatible with clamps series:
- TH, H, U, B, F for Ø 16x2 - 18x2 and 20x2;
- TH, H, B for Ø 26x3;
- TH, H for Ø 32x3;
- TH for Ø 40x3.5 - 50x4 e 63x4.5

Externally nickel-plated brass body
Elastomer seals
Stainless steel pipe clamping bush
Dielectric pipe clamp cover in PE
Threaded connection F UNI-EN-ISO 228
Max operating pressure 95°C
Max operating pressure 10 Bar

CERTIFICATIONS:
DHW

Code	Size A	Size B	Box	Carton	Cat.
08530490	16x2	1/2" F	5	40	10.02

Size A: Outside Ø x pipe thickness
Size B: thread UNI-EN-ISO 228

Fixing on specific Fixing Plate code 934.00.00

Series 852

Press fitting for multilayer pipe - flanged - F gas connection

Multi-clamp fitting.
Compatible with clamps series:
- TH, H, U, B, F for Ø 16x2 - 18x2 and 20x2;
- TH, H, B for Ø 26x3;
- TH, H for Ø 32x3;
- TH for Ø 40x3.5 - 50x4 e 63x4.5

Externally nickel-plated brass body
Elastomer seals
Stainless steel pipe clamping bush
Dielectric pipe clamp cover in PE
Threaded connection F UNI-EN-ISO 228
Max operating pressure 95°C
Max operating pressure 10 Bar

CERTIFICATIONS:
DHW

Code	Size A	Size B	Box	Carton	Cat.
08520400	16x2	1/2" F	10	60	10.02
08520430	20x2	1/2" F	5	60	10.02

Size A: Outside Ø x pipe thickness
Size B: thread UNI-EN-ISO 228

Fixing on specific Fixing Plate code 934.00.00

Series 934.A

Flanged fittings fixing plate.

Galvanised steel material
Flanged fitting application with prefixed centre distance of 80-100-120-150-160 mm
Possibility of choosing bracket attachments at only centre distance 80 mm

Code	Box	Carton	Cat.
09340000	1	6	10.02

Series 934.B

Fixing and positioning bracket.

Galvanised steel material
Complete with fixing nut

Code	Box	Carton	Cat.
09340050	1	6	10.02

Plate bracket code 934.00.00

Series 1253

Brackets with press fitting for Tita-fix multilayer pipe.

Multi-clamp fitting.
Compatible with clamps series:
- TH, H, U, B, F for Ø 16x2 - 18x2 and 20x2;
- TH, H, B for Ø 26x3;
- TH, H for Ø 32x3;
- TH for Ø 40x3.5 - 50x4 e 63x4.5

Externally nickel-plated brass body
Elastomer seals
Stainless steel pipe clamping bush
Dielectric pipe clamp cover in PE
Threaded connection F UNI-EN-ISO 228
Galvanised steel bracket
Fittings applied at prefixed interest
Fittings free to rotate
Connection G 1/2" F

CERTIFICATIONS:
DHW

Code	Size A	Centre distance (mm)	Box	Carton	Cat.
12530400	16x2	80	5	20	10.02
12530420	16x2	150	5	20	10.02
12530410	16x2	160	5	20	10.02
12530460	20x2	150	5	20	10.02
12530450	20x2	160	5	20	10.02

Size A: Outside Ø x pipe thickness

Series 3902

Press fitting for multilayer pipe - bent 90° - rotary flat seat

Multi-clamp fitting.
Compatible with clamps series:
- TH, H, U, B, F for Ø 16x2 e 20x2;
- TH, H, B for Ø 26x3;

Externally nickel-plated brass body
Elastomer seals
Stainless steel pipe clamping bush
Dielectric pipe clamp cover in PE
Angle threaded connection F UNI-EN-ISO 228
Max operating temperature 95 °C
Max operating pressure 10 Bar

CERTIFICATIONS:
DHW

Code	Size A	Size B	Box	Carton	Cat.
39021620	16x2	1/2" F	1	200	10.02
39022020	20x2	1/2" F	1	160	10.02
39021630	16x2	3/4" F	1	160	10.02
39022030	20x2	3/4" F	1	160	10.02
39022630	26x3	3/4" F	1	80	10.02
39022640	26x3	1" F	1	50	10.02

Size A: Outside Ø x pipe thickness
Size B: thread UNI-EN-ISO 228

10.02 FITTINGS FOR MULTI-LAYER PIPES | SHUT-OFF TAPS

Series 20.A

Recessed shut-off cock with chrome-plated plug and press fittings for Tita-fix multilayer pipe.

Multi-clamp fitting.
Compatible with clamps series:
- TH, H, U, B, F for Ø 16x2 - 18x2 and 20x2;
- TH, H, B for Ø 26x3;
- TH, H for Ø 32x3;
- TH for Ø 40x3.5 - 50x4 e 63x4.5

Brass body
Chrome plated cap and manoeuvre knob
Elastomer seals
Press connections with dielectric cover in PE and stainless steel pipe clamping bush
Max operating temperature 95 °C
Max operating pressure 10 Bar

CERTIFICATIONS:
DHW

Code	Size A	Size B	Box	Carton	Cat.
00200410	16x2	1/2"	5	30	10.02
00200510	20x2	3/4"	3	30	10.02
00200520*	26x3	3/4"	3	30	10.02

*Fitting supplied disassembled

30 mm extension for spacer fitting kit available. See spare parts pricelist. Product code 3516.00.02

Series 20.B

Recessed shut-off cock with chrome-plated plug.

Brass body.
Chromed cap and manoeuvering knob.
Elastomer seals.
Threaded connections FF UNI-EN-ISO 228.

- Max operating temperature 110 °C
- Max operating pressure 10 Bar

CERTIFICATIONS:
DHW

Code	Size	Model	Box	Carton	Cat.
00200400	1/2"	T	10	40	10.02
00200500	3/4"	T	5	40	10.02

30 mm extension for spacer fitting kit available. See spare parts pricelist. Product code 3516.00.02

RACCORDO A PRESSARE RBM "TITA-FIX"

Garanzia di massima qualità

DOPPIA TENUTA O-RING

Ogni raccordo è dotato di 2 O-Ring: garanzia di perfetta tenuta nel tempo.

BUSSOLA SERRATUBO IN ACCIAIO INOX

L'acciaio inox conferisce al sistema rigidità sensibilmente superiore rispetto all'alluminio, inoltre, essendo un materiale resistente alla corrosione, rende i raccordi RBM idonei per applicazioni "sotto traccia".

SISTEMA "ANTISFILAMENTO"

La particolare forma a lisca di pesce del corpo del raccordo, conferisce al raccordo stesso una maggiore presa sulla tubazione, evitando che quest'ultima si sfili accidentalmente in fase di pressatura.

GHIERA IN PLASTICA TRASPARENTE

La ghiera in plastica è realizzata in colore trasparente, questo permette di poter verificare che la tubazione sia inserita correttamente fino "in battuta".
Realizzata in unico pezzo (priva di fori), pertanto resistente contro eventuali urti.

SISTEMA DI PRESSATURA PERFETTA

La ghiera del raccordo si posiziona perfettamente in uno scacco realizzato nella ganascia della serie TH (serie consigliata). Questo facilita la pressatura poiché permette di bloccare il raccordo, garantendo che questo non si sposti.
Raccordo posizionato correttamente (pinza profilo TH).

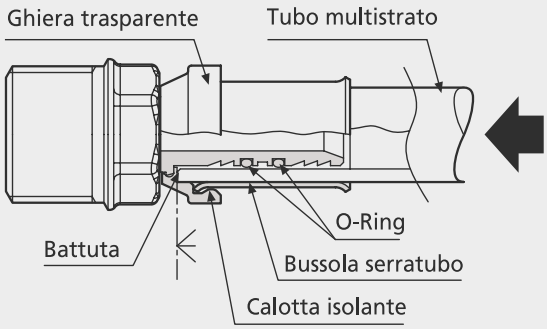

RACCORDO MULTIPINZA

I raccordi a pressare per distribuzione idrotermica sono compatibili con pinze di svariati profili:

TH, H, U, B, F per ø 16x2, 18x2 e 20x2;

TH, H, B per ø 26x3;

TH, H per ø 32x3;

TH per ø 40x3,5, 50x4 e 63x4,5.

La pressatura di raccordi per distribuzione gas deve essere effettuata esclusivamente con pinze profilo TH.

Series 1930

Compression fittings for multilayer straight - intermediate pipe

Nickel plated brass body and nut.
Brass pipe clip ring nut.
Elastomer gaskets.

- Max operating temperature 95 °C
- Max operating pressure 10 Bar

CERTIFICATIONS:
DHW

Code	Size A	Box	Carton	Cat.
19301602	16x2	10	180	10.02
19301802	18x2	10	150	10.02
19302002	20x2	10	120	10.02
19302602	26x3	5	75	10.02
19303202	32x3	5	35	10.02

Size A: Outside Ø x pipe thickness

Suitable for polyethylene and multilayer pipe.

Series 1929

Compression fittings for straight multilayer pipe - female gas connection

Nickel plated brass body and nut.
Brass pipe clip ring nut.
Elastomer gaskets.

- Size A: Pipe outside diameter
- Size B: Thread UNI-EN-ISO 228.
- Max operating temperature 95 °C
- Max operating pressure 10 Bar

CERTIFICATIONS:
DHW

Code	Size A	Size B	Box	Carton	Cat.
19291602	16x2	1/2" F	10	250	10.02
19291612	16x2	3/4" F	10	160	10.02
19291802	18x2	1/2" F	10	160	10.02
19291812	18x2	3/4" F	10	140	10.02
19292002	20x2	1/2" F	10	150	10.02
19292012	20x2	3/4" F	10	140	10.02
19292612	26x3	3/4" F	5	70	10.02
19292622	26x3	1" F	5	70	10.02
19293222	32x3	1" F	5	50	10.02

Size A: Outside Ø x pipe thickness
Size B: thread UNI-EN-ISO 228

Suitable for polyethylene and multilayer pipe.

Series 1928

Compression fittings for straight multilayer pipe - male gas connection

Nickel plated brass body and nut.
Brass pipe clip ring nut.
Elastomer gaskets.

- Max operating temperature 95 °C
- Max operating pressure 10 Bar

CERTIFICATIONS:
DHW

Code	Size A	Size B	Box	Carton	Cat.
19281602	16x2	1/2" M	10	300	10.02
19281612	16x2	3/4" M	10	160	10.02
19281802	18x2	1/2" M	10	160	10.02
19281812	18x2	3/4" M	10	160	10.02
19282002	20x2	1/2" M	10	150	10.02
19282012	20x2	3/4" M	10	150	10.02
19282612	26x3	3/4" M	5	80	10.02
19282622	26x3	1" M	5	80	10.02
19283222	32x3	1" M	5	50	10.02

Size A: Outside Ø x pipe thickness
Size B: thread UNI-EN-ISO 228

Suitable for polyethylene and multilayer pipe.

Series 1934

Compression fittings for angle - intermediate multilayer pipe

Nickel plated brass body and nut.
Brass pipe clip ring nut.
Elastomer gaskets.

- Max operating temperature 95 °C
- Max operating pressure 10 Bar

CERTIFICATIONS:
DHW

Code	Size A	Box	Carton	Cat.
19341602	16x2	10	160	10.02
19341802	18x2	10	100	10.02
19342002	20x2	10	100	10.02
19342602	26x3	5	50	10.02
19343202	32x3	5	25	10.02

Size A: Outside Ø x pipe thickness

Suitable for polyethylene and multilayer pipe.

Series 1935

Compression fittings for angle multilayer pipe - female gas connection

Nickel plated brass body and nut.
Brass pipe clip ring nut.
Elastomer gaskets.

- Max operating temperature 95 °C
- Max operating pressure 10 Bar

CERTIFICATIONS:
DHW

Code	Size A	Size B	Box	Carton	Cat.
19351602	16x2	1/2" F	10	160	10.02
19351612	16x2	3/4" F	10	120	10.02
19351802	18x2	1/2" F	10	120	10.02
19351812	18x2	3/4" F	10	100	10.02
19352002	20x2	1/2" F	10	120	10.02
19352012	20x2	3/4" F	10	100	10.02
19352612	26x3	3/4" F	5	60	10.02
19352622	26x3	1" F	5	50	10.02
19353222	32x3	1" F	5	25	10.02

Size A: Outside Ø x pipe thickness
Size B: thread UNI-EN-ISO 228

Suitable for polyethylene and multilayer pipe.

Series 1936

Compression fittings for angle multilayer pipe - male gas connection

Nickel plated brass body and nut.
Brass pipe clip ring nut.
Elastomer gaskets.

- Max operating temperature 95 °C
- Max operating pressure 10 Bar

CERTIFICATIONS:
DHW

Code	Size A	Size B	Box	Carton	Cat.
19361602	16x2	1/2" M	10	180	10.02
19361612	16x2	3/4" M	10	120	10.02
19361802	18x2	1/2" M	10	120	10.02
19361812	18x2	3/4" M	10	120	10.02
19362002	20x2	1/2" M	10	120	10.02
19362012	20x2	3/4" M	10	120	10.02
19362612	26x3	3/4" M	5	60	10.02
19362622	26x3	1" M	5	60	10.02
19363222	32x3	1" M	5	30	10.02

Size A: Outside Ø x pipe thickness
Size B: thread UNI-EN-ISO 228

Suitable for polyethylene and multilayer pipe.

Series 1937

Compression fittings for flanged elbow multilayer pipe - female gas connection

Nickel plated brass body and nut.
Brass pipe clip ring nut.
Elastomer gaskets.

- Max operating temperature 95 °C
- Max operating pressure 10 Bar

CERTIFICATIONS:
DHW

Code	Size A	Size B	Box	Carton	Cat.
19371602	16x2	1/2" F	10	120	10.02
19371802	18x2	1/2" F	10	100	10.02
19372002	20x2	1/2" F	10	100	10.02

Size A: Outside Ø x pipe thickness
Size B: thread UNI-EN-ISO 228

Suitable for polyethylene and multilayer pipe.

Series 1931

Compression fittings for T-shaped- intermediate multilayer pipe

Nickel plated brass body and nut.
Brass pipe clip ring nut.
Elastomer gaskets.

- Max operating temperature 95 °C
- Max operating pressure 10 Bar

CERTIFICATIONS:
DHW

Code	Size A	Box	Carton	Cat.
19311602	16x2	10	100	10.02
19311802	18x2	10	80	10.02
19312002	20x2	5	70	10.02
19312602	26x3	3	30	10.02
19313202	32x3	2	16	10.02

Size A: Outside Ø x pipe thickness

Suitable for polyethylene and multilayer pipe.

Series 1932

Compression fittings for T-shaped multilayer pipe - central female gas connection

Nickel plated brass body and nut.
Brass pipe clip ring nut.
Elastomer gaskets.

- Max operating temperature 95 °C
- Max operating pressure 10 Bar

CERTIFICATIONS:
DHW

Code	Size A	Size B	Box	Carton	Cat.
19321602	16x2	1/2" F	10	100	10.02
19321612	16x2	3/4" F	5	50	10.02
19321802	18x2	1/2" F	10	80	10.02
19321812	18x2	3/4" F	5	50	10.02
19322002	20x2	1/2" F	5	60	10.02
19322012	20x2	3/4" F	5	50	10.02
19322612	26x3	3/4" F	3	30	10.02
19322622	26x3	1" F	3	30	10.02
19323222	32x3	1" F	2	18	10.02

Size A: Outside Ø x pipe thickness
Size B: thread UNI-EN-ISO 228

Suitable for polyethylene and multilayer pipe.

Series 1933

T-shaped compression fittings for multilayer pipe - central male gas connection

Nickel plated brass body and nut.
Brass pipe clip ring nut.
Elastomer gaskets.

- Max operating temperature 95 °C
- Max operating pressure 10 Bar

CERTIFICATIONS:
DHW

Code	Size A	Size B	Box	Carton	Cat.
19331602	16x2	1/2" M	10	100	10.02
19331612	16x2	3/4" M	5	50	10.02
19331802	18x2	1/2" M	10	80	10.02
19331812	18x2	3/4" M	5	50	10.02
19332002	20x2	1/2" M	5	60	10.02
19332012	20x2	3/4" M	5	50	10.02
19332612	26x3	3/4" M	3	30	10.02
19332622	26x3	1" M	3	30	10.02
19333222	32x3	1" M	2	18	10.02

Size A: Outside Ø x pipe thickness
Size B: thread UNI-EN-ISO 228

Suitable for polyethylene and multilayer pipe.

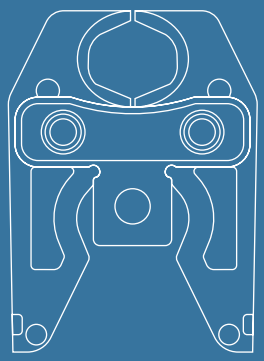

01.
HYDROTHERMAL
DISTRIBUTION

11. EQUIPMENT AND TOOLS

11.01 EQUIPMENT AND TOOLS

Equipment for compression valves and fittings
Equipment for multi-layer system
Equipment for radiant system

Series 2878

Cap adjusting wrench.

To adjust the kvs by simply acting on the external end of the control rod's thermostatic screw unit.

Code	Box	Carton	Cat.
28780000	10	10	11.01

Use for adjusting valve size 3/8" - 1/2" - 3/4".

Not suitable for adjusting valve size 1".

Series 69

Spanner for fitting with Standard RBM thread.

Square 1/2" connection, for combination or torque wrenches, to easily tighten fittings in any position.

Code	Size	Box	Carton	Cat.
00690000	Ch 28	2	26	11.01

Series 246

Spanner for fitting with Euroconus thread.

Square 1/2" connection, for combination or torque wrenches, to easily tighten fittings in any position.

Code	Size	Box	Carton	Cat.
02460000	CH30	2	26	11.01

Series 2441

Fastening spanner for adapters.

Code	Size	Box	Carton	Cat.
02441005	Ø 15 - 22 - 28	1	10	11.01

For use with fitting 178.XX.00

Series 33

Mechanical extractor.

Can be used to remove the cap unit from the thermostatic valve body, with the system running.

Mechanical extractor

Code	Box	Carton	Cat.
00330000	1	1	11.01

Gasket kit for mechanical extractor

Code	Box	Carton	Cat.
27400000	1	1	11.01

Compatible with size RBM 3/8" - 1/2" - 3/4" thermostatic valves

Series 553.A

Manual shears.

Suitable for pipes in PE, PB, PP, PVC, PVDF.

Code	Model	For pipe Ø	Box	Carton	Cat.
05530042	CS 6/35 RV	6 ÷ 35	1	1	11.01
05530052	CS 6/42 RV	6 ÷ 42	1	1	11.01

Series 553.B

Manual pipe cutter.

Suitable for multiplayer, PVC and copper pipe.
Complete with deburring tool.

Code	Model	For pipe Ø	Box	Carton	Cat.
05530062	TG 67S	6 ÷ 67	1	1	11.01
05530072	TG 32	6 ÷ 32	1	1	11.01

Series 2179

Manual shears.

Suitable for a precise and quick cut.

Code	For pipe Ø	Box	Carton	Cat.
21790002	6÷26	1	1	11.01

Series 1875

Manual pipe bender spring for multilayer pipe.

Prevents crushing pipe during bending operation.

Code	Size	Box	Carton	Cat.
18751402	Ø 14	1	1	11.01
18751602	Ø 16	1	1	11.01
18751802	Ø 18	1	1	11.01
18752002	Ø 20	1	1	11.01
18752602	Ø 26	1	1	11.01

Size: Pipe outside Ø

Its use is recommended to correctly perform bending.

Series 553.C

Hydraulic pipe bending kit, for multilayer pipe.

Prevents crushing pipe during bending operation.

Supply includes:
Manual hydraulic pump;
Shockproof containment and carrying case;
Aluminium pipe bending templates suitable for pipes with outside diameter 14-16-18-20-26-32;
Quick coupling aluminium counter templates.

Code	Box	Carton	Cat.
05530032	1	1	11.01

Its use is recommended to correctly perform bending.

Series 1165

Wireless screwdriver drill.

Set includes:
n°1 wireless drill;
n°2 batteries, 14.4V 1.5 Ah;
n°1 battery charger for screwdriver drill;
n°1 case containing entire screwdriver drill set.

Code	Box	Carton	Cat.
11650002	1	1	11.01

Series 2007

Knob for gauging-flaring tools.

Knob for manual use of flaring tool suitable for flaring RBM multilayer pipes. Tool suitable for calibrating/flaring pipes with a diameter up to 32x3. An RBM screwdriver drill with a screw drill bit is required to calibrate/flare larger diameters, code 1165.00.02

Code	Box	Carton	Cat.
20070002	1	1	11.01

Series 2006

Gauging-flaring tools for multilayer pipe.

Eliminates internal and external burrs and gauges the inside diameter of the pipe at the cutting zone.
Prearranged for manual use with specific knob and for use with screwdriver drill.

Code	Size A	Box	Carton	Cat.
20061402	Ø 14x2	1	1	11.01
20061602	Ø 16x2	1	1	11.01
20061802	Ø 18x2	1	1	11.01
20062002	Ø 20x2	1	1	11.01
20062602	Ø 26x3	1	1	11.01
20063202	Ø 32x3	1	1	11.01
20064002	Ø 40x3.5	1	1	11.01
20065002	Ø 50x4	1	1	11.01
20066302	Ø 63x4.5	1	1	11.01

Size: Outside Ø x pipe thickness.

Series 2008

Complete set of gauging-flaring tools for multilayer pipe.

Case containing gauging and flaring tools, sizes ø 16 - 20 - 26 - 32 with specific knob for manual tool used.

Code	For pipe Ø	Box	Carton	Cat.
20080002	Ø 16 - 20 - 26 - 32	1	1	11.01

Series 553.D

Electric press for press fittings.

Electric mains power supply.
Supply complete with shockproof containment and carry case.

- Power supply 230VAC
- Weight in use 4.5Kg
- Dimensions 415x180x80 mm
- Clamps that can be coupled series TH

CERTIFICATIONS:

Code	Box	Carton	Cat.
05530012	1	1	11.01

Series 553.E

Wireless press for press fitting.

Rechargeable battery power supply.
Supply complete with shockproof containment and carry case.

- Battery 18V 4Ah
- Weight in use 3.6Kg
- Dimensions 445x125x75 mm
- Clamps that can be coupled series TH

CERTIFICATIONS:

Portable wireless press

Code	Box	Carton	Cat.
05530002	1	1	11.01

Spare battery

Code	Box	Carton	Cat.
14950002	1	1	11.01

Series 681

Series TH clamps for press fittings

Suitable for RBM press code 553.00.X2

Code	Size	Box	Carton	Cat.
06811602	Ø 16	1	1	11.01
06812002	Ø 20	1	1	11.01
06812602	Ø 26	1	1	11.01
06813202	Ø 32	1	1	11.01
06814002	Ø 40	1	1	11.01
06815002	Ø 50	1	1	11.01
06816302	Ø 63	1	1	11.01

Size: Pipe outside Ø.

Series 1338

Wireless press for press fitting.

Rechargeable battery power supply.
Supplied complete with battery charger kit and shockproof containment and carrying case.

- Battery 18V 2Ah
- Weight in use 2.5Kg
- Dimensions 336x143x76 mm

CERTIFICATIONS:

CE

Portable wireless press

Code	Box	Carton	Cat.
13380002	1	1	11.01

Spare battery

Code	Box	Carton	Cat.
14960002	1	1	11.01

Compact

Series 1339

Clamp and interchangeable inserts for press fittings.

Suitable for RBM press code 1338.00.02

Code	Size	Box	Carton	Cat.
13390002	clamp	1	1	11.01
13401402	Ø 14	1	1	11.01
13401602	Ø 16	1	1	11.01
13401802	Ø 18	1	1	11.01
13402002	Ø 20	1	1	11.01
13402602	Ø 26	1	1	11.01
13403202	Ø 32	1	1	11.01

Size: Pipe outside Ø.

Series 469

Fastener clip tool.

Easy to use tool for quick installation of the pipe fastener clip, code 468.45.00, 468.39.02, 1947.57.02 and 2003.42.02.

Code	Box	Carton	Cat.
04690002	1	1	11.01

Accessory to be used on the Kilma-Graf radiant system.

Series 667

Universal unwinder for pipe coils, made of galvanised box-section steel.

Easy and quick to assemble.

The coil, once resting on the scrolling surface, is unwound easily thanks to the ball bearing.

Code	Box	Carton	Cat.
06670000	1	1	11.01

RBM

RBM

GROUP		CATEGORY		LINE	
20. **Water treatment**	166	**20.02** Physical treatment	167	Cartridge filters	167
				Air vent valves	174
				Deaerators	181
				Sludge remover filters	186
				Sludge remover/deareator filters	187
		20.03 Magnetic treatment	189	Compact magnetic sludge remover filters for boilers	192
				Magnetic sludge remover filters for heat pumps	201
				Magnetic sludge remover filters	205
				Magnetic sludge removed/deareator filters	213
				Magnetic sludge remover filters for boiler rooms	215
				Magnetic anti-scale device	219
				Magnetic dirt sludge remover filters kit	220
		20.04 Chemical treatment	222	Condensation neutraliser filter	223
				Domestic polyphosphate dosers	226
				Chemical conditioners for air-conditioning circuits	230

02. ENERGY EFFICIENCY

21. Valves for radiator and terminal control	236	**21.01** Valves for radiator and terminal control	236	Thermostatic controls	237
				Electronic programmable thermostats	241
				Wireless programmable thermostats	242
				Valves with thermostatic option	245
				PICV valves with thermostatic option	259
				Accessories	262
				Manual valves	265
				Lockshield regulating valves	274
22. Hydraulic balancing	279	**22.01** Hydraulic balancing	279	Balancing lockshield valves	280
				Flow-rate measuring stub pipe	282
				Flow control valves	283
				PICV independent pressure adjustment valves	286
				Tools and accessories	289

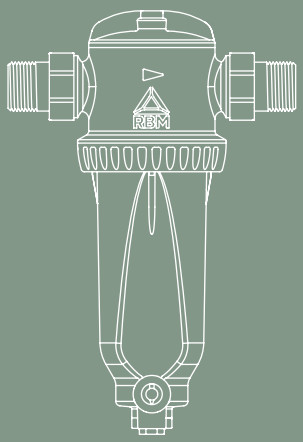

02.
ENERGY
EFFICIENCY

20. WATER TREATMENT

20.02 PHYSICAL TREATMENT 167

Cartridge filters
Air vent valves
Deaerators
Sludge remover filters
Sludge remover/deareator filters

20.03 MAGNETIC TREATMENT 189

Compact magnetic sludge remover filters for boilers
Magnetic sludge remover filters for heat pumps
Magnetic sludge remover filters
Magnetic sludge remover/deareator filters
Magnetic sludge remover filters for boiler rooms
Magnetic anti-scale device
Magnetic sludge remover filters kit

20.04 CHEMICAL TREATMENT 222

Condensation neutraliser filter
Domestic polyphosphate dosers
Chemical conditioners for air-conditioning circuits

20.02 PHYSICAL TREATMENT | CARTRIDGE FILTERS

Series 3

Line filter with removable filtering cartridge, FF connection. Suitable for water.

Nickel-plated brass body.
Stainless steel AISI 304 stretched mesh filter.
Elastomer seals.
Threaded connections FF UNI-EN-ISO 228.

- Max operating pressure 16 Bar
- Max operating temperature 100 °C
- Filtering grade: 50-100-300-800 µm

CERTIFICATIONS:
DHW

Line filter 800 µm FF connection

Code	Size	Kv (m³/h)	Box	Carton	Cat.
00030300	G 3/8"	2,60	10	40	20.02
00030400	G 1/2"	3,40	10	40	20.02
00030500	G 3/4"	5,00	6	24	20.02
00030600	G 1"	8,70	6	24	20.02
00030700	G 1"1/4	14,10	4	4	20.02
00030800	G 1"1/2	26,50	2	2	20.02
00030900	G 2"	26,50	2	2	20.02
00031000	G 2"1/2	104,70	1	1	20.02
00031100	G 3"	108,20	1	1	20.02
00031300	G 4"	111,80	1	1	20.02

Line filter 300 µm FF connection

Code	Size	Kv (m³/h)	Box	Carton	Cat.
00030310	G 3/8"	2,00	10	40	20.02
00030410	G 1/2"	3,30	10	40	20.02
00030510	G 3/4"	4,90	6	24	20.02
00030610	G 1"	8,40	6	24	20.02
00030710	G 1"1/4	13,70	4	4	20.02
00030810	G 1"1/2	24,40	2	2	20.02
00030910	G 2"	24,40	2	2	20.02
00031010	G 2"1/2	100,10	1	1	20.02
00031110	G 3"	101,70	1	1	20.02
00031310	G 4"	108,00	1	1	20.02

Line filter 100 µm FF connection

Code	Size	Kv (m³/h)	Box	Carton	Cat.
00030370	G 3/8"	2,00	10	40	20.02
00030470	G 1/2"	3,30	10	100	20.02
00030570	G 3/4"	4,90	6	24	20.02
00030670	G 1"	8,20	6	24	20.02
00030770	G 1"1/4	13,40	4	4	20.02
00030870	G 1"1/2	23,60	2	2	20.02
00030970	G 2"	23,60	2	2	20.02

Line filter 50 µm FF connection

Code	Size	Kv (m³/h)	Box	Carton	Cat.
00030320	G 3/8"	1,60	10	40	20.02
00030420	G 1/2"	1,90	10	40	20.02
00030520	G 3/4"	3,50	6	24	20.02
00030620	G 1"	4,30	6	24	20.02
00030720	G 1"1/4	6,60	4	4	20.02
00030820	G 1"1/2	11,20	2	2	20.02
00030920	G 2"	11,20	2	2	20.02
00031020	G 2"1/2	-	1	1	20.02
00031120	G 3"	-	1	1	20.02
00031320	G 4"	-	1	1	20.02

Replaceable filtering cartridge.
See BU Service.

20.02 PHYSICAL TREATMENT | CARTRIDGE FILTERS

Series 4

Line filter with removable filtering cartridge, MF connection. Suitable for water.

Nickel-plated brass body.
Stainless steel AISI 304 stretched mesh filter.
Elastomer seals.
Threaded connections MF UNI-EN-ISO 228.

- Max operating pressure 16 Bar
- Max operating temperature 100 °C
- Filtering grade: 50-100-300-800 µm

CERTIFICATIONS:
DHW

Line filter 800 µm MF connection

Code	Size	Kv (m³/h)	Box	Carton	Cat.
00040400	G 1/2"	3,40	10	40	20.02
00040500	G 3/4"	5,00	6	24	20.02
00040600	G 1"	8,70	6	24	20.02
00040700	G 1"1/4	14,10	4	4	20.02
00040800	G 1"1/2	26,50	2	2	20.02
00040900	G 2"	26,50	2	2	20.02

Line filter 300 µm MF connection

Code	Size	Kv (m³/h)	Box	Carton	Cat.
00040410	G 1/2"	3,30	10	40	20.02
00040510	G 3/4"	4,90	6	24	20.02
00040610	G 1"	8,40	6	24	20.02
00040710	G 1"1/4	13,70	4	4	20.02
00040810	G 1"1/2	24,40	2	2	20.02
00040910	G 2"	24,40	2	2	20.02

Line filter 100 µm MF connection

Code	Size	Kv (m³/h)	Box	Carton	Cat.
00040470	G 1/2"	3,30	10	40	20.02
00040570	G 3/4"	4,90	6	24	20.02
00040670	G 1"	8,20	6	24	20.02
00040770	G 1"1/4	13,40	4	4	20.02
00040870	G 1"1/2	23,60	2	2	20.02
00040970	G 2"	23,60	2	2	20.02

Line filter 50 µm MF connection

Code	Size	Kv (m³/h)	Box	Carton	Cat.
00040420	G 1/2"	1,90	10	40	20.02
00040520	G 3/4"	3,50	6	24	20.02
00040620	G 1"	4,30	6	24	20.02
00040720	G 1"1/4	6,60	4	4	20.02
00040820	G 1"1/2	11,20	2	2	20.02
00040920	G 2"	11,20	2	2	20.02

Replaceable filtering cartridge.
See BU Service.

Series 858

Y-shaped purifying filter with removable filtering cartridge. Suitable for water.

Brass body and cap.
EPDM seals.
Stainless steel AISI 304 stretched mesh filter.
Elastomer seals.
Threaded connections FF UNI-EN-ISO 228.

- Max operating pressure 16 Bar
- Max operating temperature 100 °C
- Filtering grade: 100-300-800 µm

CERTIFICATIONS:
DHW

BIM

Y-strainer 800 µm

Code	Size	Kv (m³/h)	Box	Carton	Cat.
08580412	G 1/2"	3,69	20	80	20.02
08580512	G 3/4"	6,57	12	48	20.02
08580612	G 1"	9,23	8	32	20.02
08580712	G 1"1/4	15,60	3	12	20.02
08580812	G 1"1/2	25,10	2	2	20.02
08580912	G 2"	38,80	1	1	20.02

Y-strainer 300 µm

Code	Size	Kv (m³/h)	Box	Carton	Cat.
08580402	G 1/2"	3,00	20	80	20.02
08580502	G 3/4"	6,53	12	48	20.02
08580602	G 1"	8,79	8	32	20.02
08580702	G 1"1/4	14,15	3	12	20.02
08580802	G 1"1/2	23,80	2	2	20.02
08580902	G 2"	36,20	1	1	20.02

Y-strainer 100 µm

Code	Size	Kv (m³/h)	Box	Carton	Cat.
08580472	G 1/2"	2,57	20	80	20.02
08580572	G 3/4"	5,74	12	48	20.02
08580672	G 1"	5,84	8	32	20.02
08580772	G 1"1/4	10,80	3	12	20.02
08580872	G 1"1/2	16,80	2	2	20.02
08580972	G 2"	28,20	1	1	20.02

Replaceable filtering cartridge.
See BU Service.

Series 126

Water 100 µm self-cleaning filter with removable filtering cartridge. Complete with dial pressure gauge and discharge ball valve with hose connection.

Nickel-plated brass body.
Stainless steel AISI 304 stretched mesh filter.
Elastomer seals.
Threaded connections FF UNI-EN-ISO 228.

- Max operating pressure 16 Bar
- Max operating temperature 100 °C
- Pressure gauge scale 0 ÷ 16 bar
- Standard filtering 100 µm

CERTIFICATIONS:
DHW

BIM

Code	Size	Kv (m³/h)	Box	Carton	Cat.
01260310	G 3/8"	1,80	1	10	20.02
01260410	G 1/2"	3,10	1	10	20.02
01260510	G 3/4"	5,80	1	10	20.02
01260610	G 1"	8,55	1	10	20.02
01260710	G 1"1/4	14,85	1	1	20.02
01260810	G 1"1/2	24,40	1	6	20.02
01260910	G 2"	26,10	1	6	20.02
01261010	G 2"1/2	107,80	1	1	20.02
01261110	G 3"	120,20	1	1	20.02
01261310	G 4"	129,00	1	1	20.02

Replaceable filtering cartridge.
See BU Service.

SELF-CLEANING FILTER

With extractable cartridge (filtration level: 100-300-800 micron) complete with pressure gauge and ball-valve with hose connection

RBM self-cleaning filter solve system problems caused by particles in suspension pollution. RBM product range is suitable for small, medium and big water systems. The specific structure of the filter allows impurities collect on the bottom of the filter seat making the maintenance easier.

Cartridge can be cleaned opening the discharge ball valve with hose connection and leave the water pass through it.

INSTALLATION

Correct installation of the filter is in **horizontal position, with filter seat pointed to the bottom**. For a correct assembly please be careful to the arrow (representing water flowing direction) on the body of the ball valve.

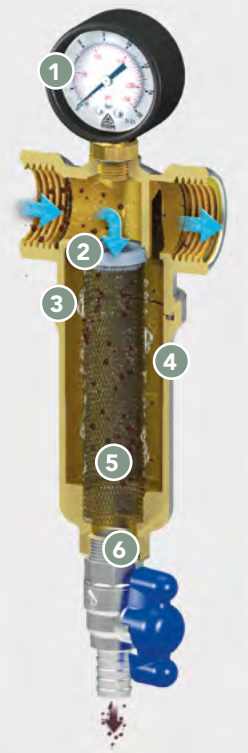

1. **Pressure gauge**
   pressure 0-16 bar
2. **O-Ring in PTFE**
3. **O-Ring**
4. **Body and cap made of nickeled brass**
5. **Extractable stainless steel cartridge**
   (100-300-800 micron)
6. **Discharge ball valve**

SELF-CLEANING: Easy and effective clean of the cartridge opening the discharge ball valve

Resistance to high pressure due to reinforced cartridge (PN 16)

MAINTENANCE

Passing through the meshes of the cartridge, water get cleaned and the impurities are collected on the bottom of the filter seat (*). Periodically the filter must be cleaned.

Operation for the replace of the filtering cartridge

- Place the container under the filter.
- Close ball valves 1 and 2.
- Unscrew filter house-cap (in the case of high temperature system, be cautious and use right protections to avoid direct contact with fluid).
- Extract the cartridge and shortly open the ball-valve. Brush it under the water; in the case of damage replace it.
- Put the cleaned cartridge inside the seat.
- Close the cap.
- Open the ball-valves.

Operation for the cleaning of the filtering cartridge

Cartridge can be cleaned opening the discharge with hose connection and leave the water pass through it.

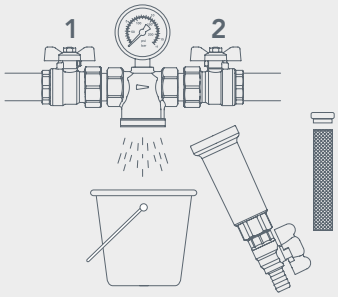

WARNING: During this operation ball valves 1 and 2 must be opened.

H2O LAB
water treatment

SMALL SIZE AUTOMATIC AIR VENT VALVES

RBM manufactures automatic air vent valves with float operation. Also called wild card valves, these devices have the function of removing air and gases from air conditioning systems, so they **must be installed in all areas** of the system where bubble formation is expected.

Miniluft CP
Series 791
Max. discharge pressure 4 Bar
Size:
G 3/8" - G 1/2"

Miniluft Compact
Series 2827.A
Max. discharge pressure 4 Bar
Size:
G 3/8" - G 1/2"

Miniluft Compact
Series 2827.B
Max. discharge pressure 4 Bar
Size:
G 3/8" - G 1/2"

Miniluft
Series 2828
Max. discharge pressure 6 Bar
Size:
G 3/8" - G 1/2"

Miniluft HP
Series 3574
Max. discharge pressure 8 Bar
Size:
G 3/8" - G 1/2" - G 3/4"

Vasa
Series 37.A
Max. discharge pressure 6 Bar
Size:
G 3/8" - G 1/2" - G 3/4" - G 1"

VasaTre
Series 216
Max. discharge pressure 6 Bar
Size:
G 3/4" - G 1" - G 1"1/4

Megaluft
Series 2840
Max. discharge pressure 5 Bar
Size:
G 3/8" - G 1/2"

Megaluft HP
Series 2836
Max. discharge pressure 6 Bar
Size:
G 1/2"

VasaSette
Series 37.B
Max. discharge pressure 6 Bar
Size:
G 3/4"

Manual air purge and venting valve
Series 18
Max. discharge pressure 10 Bar
Size:
G 1/8" - G 1/4" - G 3/8" - G 1/2"

Series 38

Check valve for the automatic shut-off of air vent valves, models Vasa, Miniluft and Megaluft.

Brass body.
Elastomer seals.
Threaded connections MF UNI-EN-ISO 228.

- Max operating pressure 6 Bar (without air venting valve)
- Max operating temperature 100 °C

Check valve

Code	Size A	Size B	Box	Carton	Cat.
00380410	G 1/2" F	G 1/2"- M	10	500	20.02

Check valve with pre-treated threading

Code	Size A	Size B	Box	Carton	Cat.
38290370	G 3/8" F	G 3/8"- M	10	800	20.02
38290470	G 3/8" F	G 1/2"- M	10	600	20.02
00380450	G 1/2" F	G 1/2"- M	10	500	20.02

MINILUFT CP

Series 791

Compact polymer automatic air vent valve for small systems, complete with manual shut-off pawl and check valve for automatic shut-off. Float operation.

Polymer body. Polymer cap unit.
Float in PP.
Stainless steel AISI 302 spring.
Elastomer seals.
Threaded connection M UNI-EN-ISO 228.

- Max operating pressure 6 Bar
- Max nominal pressure tolerable 10 Bar
- Max operating discharge pressure 4 Bar
- Max operating temperature 100 °C
- Allowed fluid water and water+glycol 30 %

FEATURES:

MAXIMUM DISCHARGE PRESSURE 4 bar

BIM

Code	Size	Model	Box	Carton	Cat.
07910340	G 3/8"	Miniluft CP	1	50	20.02
07910440	G 1/2"	Miniluft CP	1	50	20.02

MINILUFT COMPACT

Series 2827.A

Compact automatic air vent valve - side discharge - for small systems, complete with manual closing pawl. Side discharge. Float operation.

Brass body. Polymer cap unit.
Float in PP.
Stainless steel AISI 302 spring.
Elastomer seals.
Polymer air pocket breaker
Threaded connection M UNI-EN-ISO 228.

- Max operating pressure 10 Bar
- Max operating discharge pressure 4 Bar
- Max operating temperature 115 °C
- Allowed fluid water and water+glycol 30 %

FEATURES:

MAXIMUM DISCHARGE PRESSURE 4 bar

BIM

Code	Size	Model	Box	Carton	Cat.
28270310	G 3/8"	With bubble break device	1	10	20.02
28270400	G 1/2"	Miniluft Compact	1	50	20.02

*Valve fitted with air pocket breaker

Compact!

MINILUFT COMPACT

Series 2827.B

Chrome-plated compact automatic air vent for small systems, complete with manual locking pawl. Lateral discharge. Float operation.

Chrome brass body and cap.
Float in PP.
Stainless steel AISI 302 spring.
Elastomer seals.
Threaded connection M UNI-EN-ISO 228.

- Max operating pressure 10 Bar
- Max operating discharge pressure 4 Bar
- Max operating temperature 115 °C
- Allowed fluid water and water+glycol 30 %

FEATURES:

MAXIMUM DISCHARGE PRESSURE 4 bar

BIM

Code	Size	Model	Box	Carton	Cat.
28270390	G 3/8"	Miniluft Compact	1	50	20.02
28270490	G 1/2"	Miniluft Compact	1	50	20.02

Compact!

MINILUFT
Series 2828

Compact automatic air vent valve - vertical discharge - for small systems, complete with manual closing pawl. Vertical discharge. Float operation.

Brass body. Polymer cap unit.
Float in PP.
Stainless steel AISI 302 spring.
Elastomer seals.
Polymer air pocket breaker
Threaded connection M UNI-EN-ISO 228.

- Max operating pressure 10 Bar
- Max operating discharge pressure 6 Bar
- Max operating temperature 115 °C
- Allowed fluid water and water+glycol 30 %

CERTIFICATIONS:

WRAS APPROVED PRODUCT

WRAS certificate only for code 28280400

FEATURES:

MAXIMUM DISCHARGE PRESSURE 6 bar

BIM

Code	Size	Model	Box	Carton	Cat.
28280310*	G 3/8"	Miniluft	1	50	20.02
28280400	G 1/2"	Miniluft	1	50	20.02

*Valve fitted with air pocket breaker

MINILUFT HP
Series 3574

Automatic high-performance air vent valve with manual locking pawl. Vertical discharge. Float operation.

Brass bottom and cap.
Float in PP.
Stainless steel AISI 302 spring.
Elastomer seals.
Threaded connection M UNI-EN-ISO 228.

- Max operating pressure 10 Bar
- Max operating discharge pressure 8 Bar
- Max operating temperature 115 °C
- Allowed fluid water and water+glycol 30 %

FEATURES:

__LOGO__8BAR_EN-GB__

BIM

Code	Size	Model	Box	Carton	Cat.
35740300	G 3/8"	Miniluft HP	1	50	20.02
35740400	G 1/2"	Miniluft HP	1	50	20.02
35740500	G 3/4"	Miniluft HP	1	50	20.02

MINILUFT
COMPACT & MINILUFT

Automatic compact air vent valves

RBM Miniluft valves are automatic, float-operated air vent valves designed to remove air and gases from heating or cooling systems.

Their small size makes them ideal for applications on manifolds or distribution kits housed in containment boxes.

Despite their small size, they are very effective in removing air during both loading and emptying, helping keep the various areas of the system where they are installed free of air.

With their high functional guarantee, these automatic air vent valves must be considered a system safety device.

- Ensures system efficiency
- Limited overall dimensions
- Automatic air venting

MINILUFT COMPACT
Lateral discharge

MINILUFT COMPACT CHROME
Lateral discharge

MINILUFT
Vertical discharge

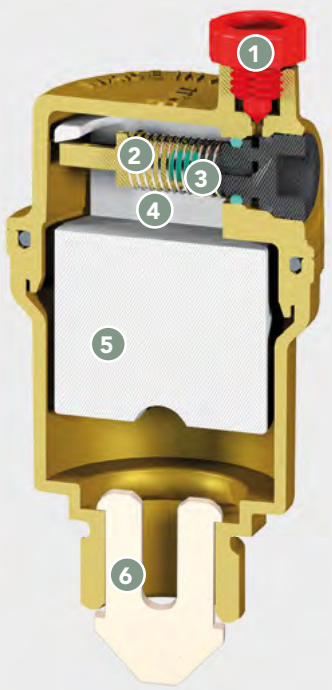

1. **Closure cap**
2. **Spring**
3. **Gas ejection device**
   The ejection of gases (such as oxygen, hydrogen, carbon dioxide) prevents the latter, if retained, from forming corrosive acid solutions or activating galvanic drilling processes in the presence of stray currents. The gas ejection device can be closed by completely screwing the cap.
4. **Air accumulation pressostatic chamber**
   The pressostatic chamber is designed to prevent contact between the impurities present on the fluid free surface and the sealing device, especially when the circulation pump is started.
5. **Float**
   Technopolymer float, fitted inside the body in such a way that its functionality cannot be influenced by external movements, including rotation and vibration.
6. **Air pocket breaker**
   (only available in size 3/8")
   Prevents the formation of air pockets in the system that could block the drain flow. If combined with Series 38 check valve, remove the air pocket breaker from the valve.

Structure completely made of brass.

OPERATING PRINCIPLE

The accumulation of air bubbles in the upper part of the valve body (air accumulation pressostatic chamber) causes the float descent and, consequently, the gas ejection device opening.

For the valve to properly operate, make sure that the water pressure remains lower than the maximum discharge pressure value **(4 bar for the model Miniluft Compact - 6 bar for the model Miniluft).**

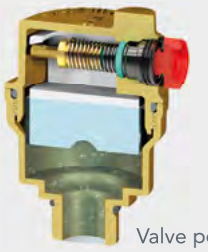

Valve position **CLOSED**

Valve position **OPEN**

H2O LAB
water treatment

MINILUFT HP

High performance compact automatic air venting valve

RBM Miniluft HP valves are automatic, float-operated air vent valves designed to remove air and gases from heating or cooling systems. They are ideal for application on vertical or horizontal columns, on manifolds or boilers, and can be installed in every zone of the system where bubbles may develop.

Featuring a small size and high performance (they have a wider pressostatic chamber compared to Miniluft valves), they are very effective in removing air both during filling and emptying, helping you keep the areas on the system where they are installed free from air. With their high functional guarantee, these automatic air vent valves must be considered a system safety device.

MAXIMUM DISCHARGE PRESSURE 8 bar

- Ensures system efficiency
- Limited overall dimensions
- High performance
- Automatic air venting

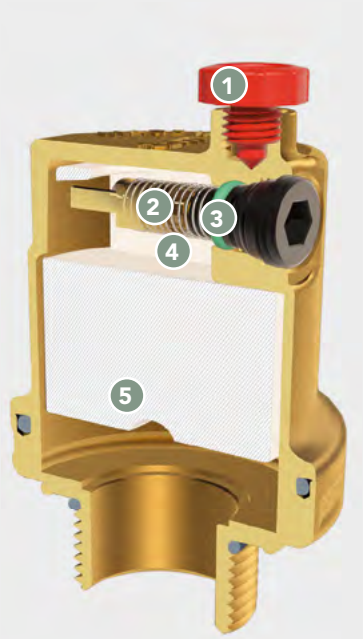

1. **Closure cap**
2. **Spring**
3. **Gas ejection device**
   The ejection of gases (such as oxygen, hydrogen, carbon dioxide) prevents the latter, if retained, from forming corrosive acid solutions or activating galvanic drilling processes in the presence of stray currents. The gas ejection device can be closed by completely screwing the cap.
4. **Air accumulation pressostatic chamber**
   The pressostatic chamber is designed to prevent contact between the impurities present on the fluid free surface and the sealing device, especially when the circulation pump is started.
5. **Float**
   Technopolymer float, fitted inside the body in such a way that its functionality cannot be influenced by external movements, including rotation and vibration.

Structure completely made of brass

OPERATING PRINCIPLE

The accumulation of air bubbles in the upper part of the valve body (air accumulation pressostatic chamber) causes the float descent and, consequently, the gas ejection device opening.

For the valve to properly operate, make sure that the water pressure remains lower than the maximum discharge pressure value.

Valve position **CLOSED**

Valve position **OPEN**

VASA
Series 37.A

Automatic air vent valve, degasser with protective cap. Float operation.

Nickel-plated brass body.
Float and lever in PP.
Stainless steel AISI 302 spring.
Elastomer seals.
Threaded connection M UNI-EN-ISO 228.

- Max operating pressure 6 Bar
- Max operating discharge pressure 2.5 Bar
- Max operating temperature 100 °C
- Allowed fluid water and water+glycol 30 %

CERTIFICATIONS:

FEATURES:

MAXIMUM DISCHARGE PRESSURE 2,5 bar

Code	Size	Model	Box	Carton	Cat.
00370360	G 3/8"	Vasa	10	40	20.02
00370460	G 1/2"	Vasa	10	40	20.02
00370560	G 3/4"	Vasa	10	40	20.02
00370660	G 1"	Vasa	10	40	20.02

Notes: To be installed on circuits with positive pumping pressures.
For circuits with negative pumping pressures, always provide for component manual shut-off by interposing a suitable ball valve.

Replaceable float unit.
Cod. 891.00.00 See spare parts pricelist.

VASATRE
Series 216

Automatic air vent valve, degasser, angle connection with protective cap, complete with integrated drain valve and Gardena quick connector, pressure gauge connection. Float operation.

Nickel-plated brass body.
Float and lever in PP.
Elastomer seals.
Threaded angle connection M UNI-EN-ISO 228.
Pressure gauge connection F G1/4.

- Max operating pressure 6 Bar
- Max operating temperature 100 °C
- Allowed fluid water and water+glycol 30 %

FEATURES:

MAXIMUM DISCHARGE PRESSURE 2,5 bar

Code	Size	Model	Box	Carton	Cat.
02160560	G 3/4"	VasaTre	3	12	20.02
02160660	G 1"	VasaTre	3	12	20.02
02160760	G 1"1/4	VasaTre	3	3	20.02

Notes: To be installed on circuits with positive pumping pressures.
Assembly on horizontally developed manifolds and pipes.

Replaceable float unit.
Cod. 891.00.00

MEGALUFT

Series 2840

High-capacity automatic air vent valve, degasser. Float operation.

Brass body.
Float and lever in PP.
Stainless steel AISI 302 spring.
Elastomer seals.
Threaded connection M UNI-EN-ISO 228.

- Max operating pressure 10 Bar
- Max operating discharge pressure 5 Bar
- Max operating temperature 115 °C
- Allowed fluid water and water+glycol 30 %

FEATURES:

MAXIMUM DISCHARGE PRESSURE 5 bar

BIM

Code	Size	Model	Box	Carton	Cat.
28400300	G 3/8"	Megaluft	1	50	20.02
28400400	G 1/2"	Megaluft	1	50	20.02

Series 18

Manual air purge and venting valve.

Nickel-plated brass body.
Heat resistant control knob.
Threaded connection M UNI-EN-ISO 228 with pre-gasket ring in PTFE.

- Max operating pressure 10 Bar
- Max operating temperature 90 °C

Code	Size	Box	Carton	Cat.
00180100	1/8"	11	200	20.02
00180200	1/4"	12	200	20.02
00180300	3/8"	13	200	20.02
00180400	1/2"	14	200	20.02

MEGALUFT HP

Series 2836

Deaerator with high discharge capacity. Float operation.

Brass body.
Float and lever in PP.
Stainless steel AISI 302 spring.
Elastomer seals.
Threaded connection M UNI-EN-ISO 228.

- Max operating pressure 10 Bar
- Max operating discharge pressure 10 Bar
- Max operating temperature 115 °C
- Allowed fluid water and water+glycol 30 %

FEATURES:

MAXIMUM DISCHARGE PRESSURE 10 bar
BIM

Code	Size	Model	Box	Carton	Cat.
28360400	G 1/2"	Megaluft HP	1	10	20.02

AIRTERM

Series 2830.A

In-line deaerator. Float operated.

Brass body.
Float and lever in PP.
Stainless steel AISI 302 spring.
Stainless steel 304 3Layers cartridge.
Elastomer seals.
Threaded connections F UNI-EN-ISO 228.

- Max operating pressure 10 Bar
- Max operating discharge pressure 10 Bar
- Max operating temperature 110 °C
- Allowed fluid water and water+glycol 30 %

FEATURES:

MAXIMUM DISCHARGE PRESSURE 10 bar
BIM

Code	Size	Model	Box	Carton	Cat.
28300400	G 1/2"	Airterm	1	6	20.02
28300500	G 3/4"	Airterm	1	6	20.02
28300600	G 1"	Airterm	1	6	20.02
28300700	G 1"1/4	Airterm	1	6	20.02
28300800	G 1"1/2	Airterm	1	6	20.02
28300900	G 2"	Airterm	1	1	20.02

Series 3740.A

Insulation shell for Airterm in-line deaerator (threaded) consisting of half-casings made of expanded polyethylene with external antiscratch coating.

Fire behaviour class I
Density 33 kg/m³
Max operating temperature -40 ÷ +90 °C

Code	Size	Box	Carton	Cat.
37400412	1/2" F	1	1	20.02
37400512	3/4" F	1	1	20.02
37400612	1" F	1	1	20.02
37400712	1"1/4 F	1	1	20.02
37400812	1"1/2 F	1	1	20.02
37400912	2" F	1	1	20.02

MEGALUFT AND MEGALUFT HP

Automatic high capacity air vent valves

Megaluft are high performance, float-operated automatic air vent valves with high discharge capacity.
They are designed to remove any air and gas contained in the heating or cooling system.
They are ideal for application on vertical or horizontal columns, on manifolds or boilers, and can be installed in every zone of the system where bubbles may develop.

Megaluft and Megaluft HP are intended to remove air both during loading and emptying, without the need for manual intervention. Thanks to their high discharge capacity, they help keep all points of the system where they are installed air free. With their high functional guarantee, these automatic air vent valves must be considered a system safety device.

MAXIMUM DISCHARGE PRESSURE 5 bar

MEGALUFT

MAXIMUM DISCHARGE PRESSURE 10 bar

MEGALUFT HP

- Ensures system efficiency
- High discharge capacity
- High performance
- Automatic air venting

1 Closure cap

2 Spring

3 Gas ejection device
Located far away from the water free surface, outside of the valve, it prevents residual impurities present in the system liquid from impairing the ejection device tightness. The ejection of gases (such as oxygen, hydrogen, carbon dioxide) prevents the latter, if retained, from forming corrosive acid solutions or activating galvanic drilling processes in the presence of stray currents. The gas ejection device can be closed by completely screwing the cap.

4 Air accumulation pressostatic chamber
The pressostatic chamber is wide and it is designed to prevent contact between the impurities present on the fluid free surface and the sealing device, especially when the circulation pump is started.

5 Float
Technopolymer float, fitted inside the body in such a way that its functionality cannot be influenced by external movements, including rotation and vibration.

Structure completely made of brass

OPERATING PRINCIPLE

The accumulation of air bubbles in the upper part of the valve body (air accumulation pressostatic chamber) causes the float descent and, consequently, the gas ejection device opening. For the valve to properly operate, make sure that the water pressure remains lower than the maximum discharge pressure value. **(5 bar for the model Megaluft - 10 bar for the model Megaluft HP).**

Valve position **CLOSED**

Valve position **OPEN**

AIRTERM & AIRTERM UP

Float operated deaerators

In-line **RBM Airterm** and adjustable **RBM Airterm UP** deaerators are devices designed to eliminate any micro air bubbles contained in the systems.

They are essentially made up of two parts:

ACTIVE: The area where microbubbles are formed as a result of strong turbulence and swirling motion. Microbubbles blend together becoming bubbles.

PASSIVE: Float-operated air vent valve to eliminate air bubbles.

With their capacity to absorb air bubbles nestled in the system's critical areas, deaerators help guarantee system efficiency and are therefore considered safety devices.

MAXIMUM DISCHARGE PRESSURE 10 bar

AIRTERM
In-line deaerator

MAXIMUM DISCHARGE PRESSURE 10 bar

AIRTERM UP
Adjustable deaerator

- Ensuressystem efficiency
- High discharge capacity
- High performance (max. discharge pressure 10 bar)
- Bi-directional (model Airterm)
- Can be mounted on vertical, horizontal and diagonal piping (model Airterm UP)

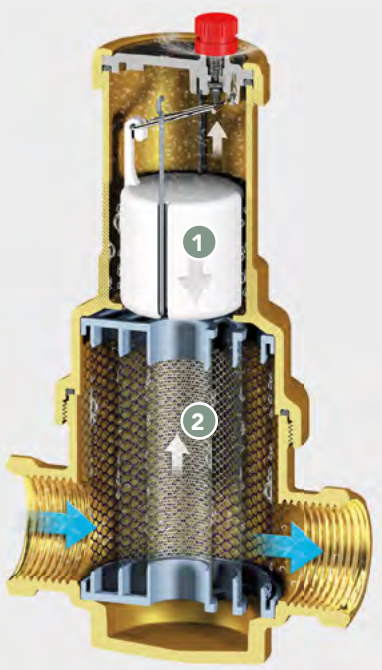

1 Passive part
High-performance air vent valve (discharge guaranteed up to 10 bar).

2 Innovative cartridge
made up of stainless steel sheets with different filtering grades. Stainless steel is an exceptional guarantee of long service life, maximum reliability in variable pressure, temperature, resistance to corrosion and wear conditions, generated by impurities (as it is increasingly less possible to predict what they are comprised of). The flow goes directly through the cartridge, and the continuous changes in sections lead to the creation of swirling movements which promote the release of micro bubbles. Nonetheless, the cartridge offers little resistance to flow passage and is characterised by very low head losses. The micro bubbles settle on the internal metal cage and, after reaching an adequate size, they move upwards and are ejected by the passive part of the device.

1 Passive part
High-performance air vent valve (discharge guaranteed up to 10 bar).

2 Innovative spiral cartridge
made of stainless steel. Stainless steel is an exceptional guarantee of long service life, maximum reliability in variable pressure, temperature, resistance to corrosion and wear conditions, generated by impurities (as it is increasingly less possible to predict what they are comprised of). The flow goes directly through the cartridge, and the continuous changes in sections lead to the creation of swirling movements which promote the release of micro bubbles. Nonetheless, the cartridge offers little resistance to flow passage and is characterised by very low head losses. The micro bubbles settle on the internal metal cage and, after reaching an adequate size, they move upwards and are ejected by the passive part of the device.

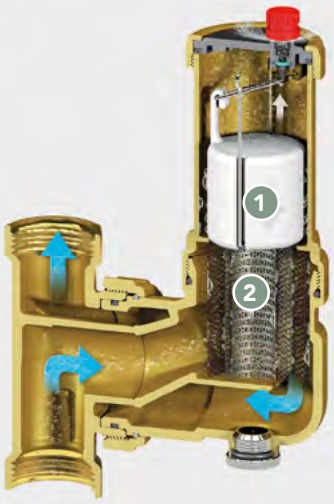

AIRTERM

Series 2830.B

Flanged in-line deaerator. Float operation.

Painted steel body.
Valve body and brass degasser.
Elastomer degasser seals.
PN16 flanged connections.

- Max operating pressure 10 Bar
- Max operating discharge pressure 10 Bar
- Max operating temperature 110 °C
- Allowed fluid water and water+glycol 30 %

FEATURES:

MAXIMUM DISCHARGE PRESSURE 10 bar

BIM

Code	Size	Model	Box	Carton	Cat.
28300972	DN 50	Airterm	1	1	20.02
28301072	DN 65	Airterm	1	1	20.02
28301172	DN 80	Airterm	1	1	20.02
28301372	DN 100	Airterm	1	1	20.02
28301472	DN 125	Airterm	1	1	20.02
28301572	DN 150	Airterm	1	1	20.02

Flange suitable for coupling with counter-flange UNI EN 1092-1.

Series 3740.B

Insulation shell for Airterm in-line deaerator (flanged) consisting of half-casings made of expanded polyethylene with external antiscratch coating.

Fire behaviour class I
Density 33 kg/m³
Max operating temperature -40 ÷ +90 °C

Code	Size	Box	Carton	Cat.
37400902	DN50	1	1	20.02
37401002	DN65	1	1	20.02
37401102	DN80	1	1	20.02
37401302	DN100	1	1	20.02
37401402	DN125	1	1	20.02
37401502	DN150	1	1	20.02

20.02 PHYSICAL TREATMENT | DEAERATORS

AIRTERM UP
Series 2649

Adjustable deaerator. Float operation.

Brass body.
Float and lever in PP.
Stainless steel AISI 302 spring.
Stainless steel AISI 304 cartridge.
Elastomer seals.
Threaded connections F UNI-EN-ISO 228.

- Max operating pressure 10 Bar
- Max operating discharge pressure 10 Bar
- Max operating temperature 115 °C
- Allowed fluid water and water+glycol 30 %

FEATURES:

MAXIMUM DISCHARGE PRESSURE 10 bar
BIM

Code	Size	Model	Box	Carton	Cat.
26490500	G 3/4"	Airterm UP	1	6	20.02
26490600	G 1"	Airterm UP	1	6	20.02

Can be mounted on vertical, horizontal and diagonal piping.
Possibility to mount accessory connector series 2343.A (see p. 208) for system washing.

VASASETTE
Series 37.B

Large-capacity automatic air vent valve, degasser, with protective cap, with conveyable discharge. Float operation.

Nickel-plated brass body.
Float in PP.
Elastomer seals.
Threaded connections FF UNI-EN-ISO 228.
Channelled air discharge F G 1/2"."

- Max operating pressure 6 Bar
- Max operating discharge pressure 3 Bar
- Max operating temperature 100 °C
- Allowed fluid water and water+glycol 30 %

CERTIFICATIONS:

CH

FEATURES:

MAXIMUM DISCHARGE PRESSURE 3 bar

Code	Size A	Size B	Model	Box	Carton	Cat.
00370570	G 3/4"	1/2"	VasaSette	1	4	20.02

Large capacity discharge.
Channelled venting valve.

DIRTERM

Series 2829.A

Self-cleaning dirt separator. Complete with drain ball valve with hose connection.

Brass body.
Stainless steel AISI 304 3 Layers filtering cartridge.
Elastomer hydraulic seals.
Threaded connections FF UNI-EN-ISO 228.

- Max operating pressure 10 Bar
- Operating temperature 0 ÷ +110 °C

CERTIFICATIONS:

Code	Size	Kv (m³/h)	Box	Carton	Cat.
28290400	G 1/2"	7,40	1	6	20.02
28290500	G 3/4"	12,66	1	6	20.02
28290600	G 1"	20,44	1	6	20.02
28290700	G 1"1/4	28,14	1	6	20.02
28290800	G 1"1/2	44,45	1	6	20.02
28290900	G 2"	65,58	1	6	20.02

Series 3739.A

Insulation shell for Dirterm self-cleaning defuser (threaded) consisting of polyethylene foam half shells with scratch-resistant film outer coating.

Fire behaviour class I
Density 33 kg/m³
Max operating temperature -40 ÷ +90 °C

Code	Size	Box	Carton	Cat.
37390412	1/2" F	1	1	20.02
37390512	3/4" F	1	1	20.02
37390612	1" F	1	1	20.02
37390712	1"1/4 F	1	1	20.02
37390812	1"1/2 F	1	1	20.02
37390912	2" F	1	1	20.02

DIRTERM UP

Series 3491

Adjustable self-cleaning dirt separator. Complete with drain ball valve with hose connection.

Brass body.
Stainless steel AISI 304 3 Layers filtering cartridge.
Elastomer hydraulic seals.
Threaded connections FF UNI-EN-ISO 228.

- Max operating pressure 10 Bar
- Operating temperature 0 ÷ +110 °C

CERTIFICATIONS:

Code	Size	Box	Carton	Cat.
34910500	G 3/4"	1	1	20.02
34910600	G 1"	1	1	20.02

Can be mounted on vertical, horizontal and diagonal piping.
Possibility to mount accessory connector series 2343.A (see p. 208) for system washing.

AIRTERM DIRT

Series 2831.A

Self-cleaning dirt separator / deaerator. Float operated deaerator. Complete with drain ball valve with hose connection.

Brass body.
Lever floating device in PP.
Stainless steel AISI 304 3 Layers filtering cartridge.
Elastomer hydraulic seals.
Threaded connections FF UNI-EN-ISO 228.

- Max operating pressure 10 Bar
- Max operating discharge pressure 10 Bar
- Operating temperature 0 ÷ +110 °C

CERTIFICATIONS:

FEATURES:

MAXIMUM DISCHARGE PRESSURE 10 bar

BIM

Code	Size	Kv (m³/h)	Box	Carton	Cat.
28310400	G 1/2"	7,40	1	1	20.02
28310500	G 3/4"	12,66	1	1	20.02
28310600	G 1"	20,44	1	1	20.02
28310700	G 1"1/4	28,14	1	1	20.02

Dirt separator + embedded deaerator.

Series 3741.A

Insulation shell for Airterm Dirt Self-cleaning dirt separator/ deaerator (threaded) consisting of half-casings made of expanded polyethylene with external antiscratch coating.

Fire behaviour class I
Density 33 kg/m³
Max operating temperature -40 ÷ +90 °C

Code	Size	Box	Carton	Cat.
37410412	1/2" F	1	1	20.02
37410512	3/4"F	1	1	20.02
37410612	1" F	1	1	20.02
37410712	1"1/4 F	1	1	20.02

AIRTERM DIRT

Series 2831.B

Flanged self-cleaning dirt separator / deaerator. Float operation.

Painted steel body.
Valve body and brass degasser.
Elastomer degasser seals.
PN16 flanged connections.

- Max operating pressure 10 Bar
- Max operating discharge pressure 10 Bar
- Max operating temperature 110 °C
- Allowed fluid water and water+glycol 30 %

CERTIFICATIONS:

FEATURES:

MAXIMUM DISCHARGE PRESSURE 10 bar

BIM

Code	Size	Box	Carton	Cat.
28310972	DN 50	1	1	20.02
28311072	DN 65	1	1	20.02
28311172	DN 80	1	1	20.02
28311372	DN 100	1	1	20.02
28311472	DN 125	1	1	20.02
28311572	DN 150	1	1	20.02

Dirt separator + embedded deaerator.
Flange suitable for coupling with counter-flange UNI EN 1092-1.

Series 3741.B

Insulation shell for Airterm Dirt Self-cleaning dirt separator/ deaerator (flanged) consisting of half-casings made of expanded polyethylene with external antiscratch coating.

Fire behaviour class I
Density 33 kg/m³
Max operating temperature -40 ÷ +90 °C

Code	Size	Box	Carton	Cat.
37410902	DN50	1	1	20.02
37411002	DN65	1	1	20.02
37411102	DN80	1	1	20.02
37411302	DN100	1	1	20.02
37411402	DN125	1	1	20.02
37411502	DN150	1	1	20.02

20. WATER TREATMENT

20.03 MAGNETIC TREATMENT

Compact magnetic sludge remover filters for boilers
Magnetic sludge remover filters for heat pumps
Magnetic sludge remover filters
Magnetic sludge remover/deareator filters
Magnetic sludge remover filters for boiler rooms
Magnetic anti-scale device
Magnetic sludge remover filters kit

H2O LAB
water treatment

MAGNETIC FILTRATION

The most comprehensive range
for all requirements

BOILERS > 35 KW

SafeCleaner2
Series 2405 - 2344 - 2319
Measures:
3/4" - 1" - 1"1/4

Dirterm Mag
Series 3173
Measures:
1/2" - 3/4" - 1" - 1"1/4 - 1"1/2 - 2"

Mag-nus 2
Series 3548
Measures:
3/4" - 1"

Line magnetic filter
Series 4162
Measures:
1/2" - 3/4" - 1" - Ø 22 - Ø 28

BOILERS < 35 kW

MG1
Series 3070.A
Measures:
3/4"

MG1
Series 3070.B
Measures:
3/4"

MG2
Series 3715.A
Measures:
3/4"

HEAT PUMPS

MP1
Series 3699
Measures:
1" - 1"1/4

MP2
Series 3833
Measures:
1"

MP2 BIG
Series 3939
Measures:
1"

BOILER ROOMS

MG Compact
Series 3602
Measures:
1/2" - 3/4" - 1" - 1"1/4
1"1/2 - 2"

Dirterm Mag Flanged
Series 3173.B
Measures:
DN 50, DN 65, DN 80, DN 100, DN 125, DN 150

MG Plus
Series 3541
Measures:
50 - 65 - 80
100 - 125 - 150

MG2
Series 3715.A

Triple-action under-boiler magnetic sludge remover filter.

Plastic polymer cartridge holder body.
Stainless steel AISI 304 filtering cartridge.
Elastomer hydraulic seals.
Threaded connections MF UNI-EN-ISO 228.

- Max operating pressure 3 Bar
- Operating temperature 0÷90 °C
- Neodymium magnet
- B(T max) / B(T amb)* < 1%
- * T max = 130 °C - T amb = 21 °C
- Filtering grade 800 µm

FEATURES:

BIM
PATENTED

Code	Size	Kv (m³/h)	Box	Carton	Cat.
37150510	G 3/4"	4,65	1	6	20.03

Super compact.
Shut-off system included.
Triple filtration.
High efficiency.
Removes any impurity.
Fights corrosion.
Increases the lifespan of the boiler.
Maintains optimum system efficiency.

MG2F
Series 3816

MG2F triple-action under-boiler magnetic sludge remover filter, supplied with an idle nut fitting, ball valve and extendable flexible fitting

Special filter for wall-mounted boiler

Body in plastic polymer.
Stainless steel AISI 304 filtering cartridge.
Elastomer hydraulic seals.
Threaded connection F UNI-EN-ISO 228.
3/4" flat seat valve.

- Max operating pressure 3 Bar
- Operating temperature 0÷90 °C
- Neodymium magnet B = 11000 gauss
- B(T max) / B(T amb)* < 1%
- * T max = 130 °C - T amb = 21 °C
- Filtering grade 800 µm

Code	Size	Kv (m³/h)	Box	Carton	Cat.
38160520	G 3/4"	5,6	1	6	20.03

H2O LAB
water treatment

MG2
Under boiler magnetic sludge remover filter

OPERATING PRINCIPLE

Through its effective and constant action, the magnetic filter collects all the impurities, preventing them from circulating, thus avoiding wear and damage of the rest of the components making up the system, circulators and heat exchangers in particular. **RBM MG2** performs a continuous protective action on the boiler.

USE

It is advised to install **RBM MG2** on the return circuit, at the inlet of the boiler, in order to protect it from any impurities in the system, especially during the start-up phase.

Thanks to its compact dimensions, it can be installed under the boiler, in systems for domestic use, where installation spaces are very limited and there is no room for a traditional dirt separator.

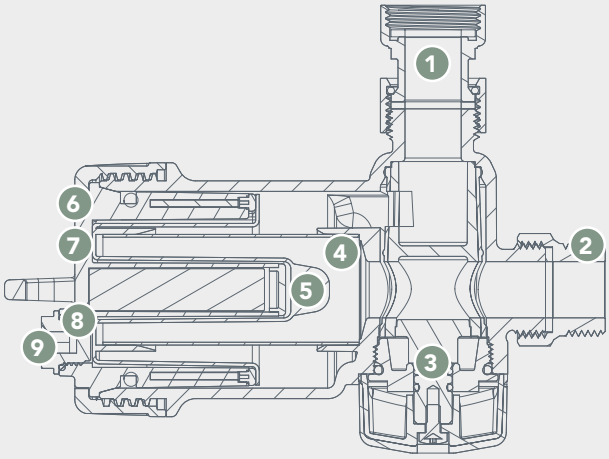

1. **Swivel connection**
   It enables to easily connect the filter to connection G 3/4"M of the boiler
2. **Threaded connections G 3/4"**
   Only one type of threaded connections: maximum installation versatility
3. **Shut-off system**
   During maintenance, it allows to isolate the filter from the delivery and return circuit. This minimises the leakage of already treated water present in the closed circuit
4. **Filtering mesh in stainless steel**
5. **Magnet protection conduit, removable**
6. **Closure**
7. **Tightening ring nut**
8. **OR di tenuta**
9. **Safety drain plug**
   Enables to drain the fluid from the main body of the filter and, therefore, to perform programmed cleaning operations

THE SYSTEM WATER IS FILTERED THROUGH THREE ACTIONS:

1. The dirty water is conveyed around the central magnet which attracts the magnetic residues (first magnetic filtration)

2. The water passes through the metal mesh (mechanical filtration of non magnetic impurities)

3. The water touches the external walls of the filter where it meets an 8-magnet crown (second magnetic filtration)

MAXIMUM INSTALLATION VERSATILITY

RBM MG2 can be installed horizontally or vertically, the shank with rotary nut included in the pack is used to connect the boiler and the connection on the circuit can be made with a flexible fitting (accessory 3174.05.30).

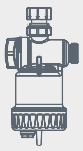

VERTICAL ASSEMBLY

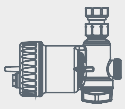

HORIZONTAL ASSEMBLY

- Super compact
- Shut-off system included
- Triplefiltration
- High efficiency
- Removes any impurity
- Fights corrosion
- Increases the lifespan of the boiler
- Ensures system efficiency

MG1

Series 3070.A

Under-boiler magnetic sludge remover filter - black. Supplied complete with swivel filter/boiler connection fitting and ball valve.

Plastic polymer cartridge holder body.
Stainless steel AISI 304 filtering cartridge.
Elastomer hydraulic seals.
Threaded connections MF UNI-EN-ISO 228.

- Max operating pressure 3 Bar
- Operating temperature 0 ÷ +90 °C
- Neodymium magnet B = 11000 gauss
- B(T max) / B(T amb)* < 1%
- * T max = 130 °C - T amb = 21 °C
- Filtering grade 800 µm

CERTIFICATIONS:

FEATURES:

BIM
PATENTED

Code	Size	Kv (m³/h)	Box	Carton	Cat.
30700500	G 3/4"	5,49	1	6	20.03

800 µm and 400 µm filtering cartridges available in the Service division.

MG1

Series 3070.B

Under-boiler magnetic sludge remover filter. Supplied complete with swivel filter/boiler connection fitting and ball valve.

Plastic polymer cartridge holder body.
Stainless steel AISI 304 filtering cartridge.
Elastomer hydraulic seals.
Threaded connections MF UNI-EN-ISO 228.

- Max operating pressure 3 Bar
- Operating temperature 0 ÷ +90 °C
- Neodymium magnet B = 11000 gauss
- B(T max) / B(T amb)* < 1%
- * T max = 130 °C - T amb = 21 °C
- Filtering grade 800 µm

CERTIFICATIONS:

FEATURES:

BIM
PATENTED

Code	Size	Kv (m³/h)	Box	Carton	Cat.
30700550	G 3/4"	5,49	1	6	20.03

800 µm and 400 µm filtering cartridges available in the Service division.

MG1F
Series 3701.A

Under-boiler magnetic sludge remover filter. Supplied complete with swivel filter/boiler connection fitting and ball valve.

Plastic polymer cartridge holder body.
Stainless steel AISI 304 filtering cartridge.
Elastomer hydraulic seals.
Threaded connections MF UNI-EN-ISO 228.

- Max operating pressure 3 Bar
- Operating temperature 0 ÷ +90 °C
- Neodymium magnet B = 11000 gauss
- B(T max) / B(T amb)* < 1%
- * T max = 130 °C - T amb = 21 °C
- Filtering grade 100 µm

CERTIFICATIONS:

FEATURES:

PATENTED

Code	Size	Kv (m³/h)	Box	Carton	Cat.
37010580	G 3/4"	5,49	1	6	20.03

800 µm and 100 µm filtering cartridges available in the Spare parts section.

MG1F
Series 3701.B

Under-boiler magnetic sludge remover filter. Supplied complete with swivel filter/boiler connection fitting and ball valve.

Plastic polymer cartridge holder body.
Stainless steel AISI 304 filtering cartridge.
Elastomer hydraulic seals.
Threaded connections MF UNI-EN-ISO 228.

- Max operating pressure 3 Bar
- Operating temperature 0 ÷ +90 °C
- Neodymium magnet B = 11000 gauss
- B(T max) / B(T amb)* < 1%
- * T max = 130 °C - T amb = 21 °C
- Filtering grade 100 µm

CERTIFICATIONS:

FEATURES:

PATENTED

Code	Size	Kv (m³/h)	Box	Carton	Cat.
37010590	G 3/4"	5,49	1	6	20.03

The 800 µm and 400 µm TZB filtering cartridges are available in the Spare Parts section.

Series 3174.A

Straight rotary fitting.

Threaded connections FF UNI-EN-ISO 228.

Code	Size	Box	Carton	Cat.
31740500	3/4"	1	6	20.03

Fitting for filter/boiler connection

Series 3174.B

Curved rotary fitting.

- Specific fitting for connection of MG1 to boilers with front connection (e.g. Vaillant model).

Threaded connections FF UNI-EN-ISO 228.

Code	Size	Box	Carton	Cat.
31740510	3/4"	1	6	20.03

Series 3174.C

Flexible expandable fitting for filter connection.

Threaded connections MF UNI-EN-ISO 228.
L 80 ÷ 120 mm

Code	Size	Box	Carton	Cat.
31740530	3/4"	1	6	20.03

Series 3174.D

Ball valve with rotary connection.

Threaded connections MF UNI-EN-ISO 228.

Code	Size	Box	Carton	Cat.
31740520	3/4"	1	6	20.03

Series 3174.E

Ball valve with rotary connection.

Threaded connections F UNI-EN-ISO 228.
Compression fitting for copper pipe.

Code	Size	Box	Carton	Cat.
31740540	3/4" x Ø22	1	6	20.03

Series 943.A

MG1 filter cap removal spanner

Code	Box	Carton	Cat.
09433005	1	1	60.01

H2O LAB
water treatment

MG1
Compact magnetic system filter

RBM MG1 represents the best solution to solve plant problems due to particle pollution, especially rust and sand that are formed due to corrosion and scale during the normal operation of a system. Thanks to its compact dimensions, it is perfect when the boiler to be protected is installed in a kitchen cabinet or where installation spaces are very limited and there is no room for other dirt separators. Through its effective and constant action, the magnetic filter collects all the impurities present in the system, preventing them from circulating within it, thus avoiding wear and damage of the circulator and the heat ex changer.

PATENT: N° 202015000064159

By going through a set course, the fluid is forced to cross the many areas that modify its motion and filter its content:

1 The sudden cross section variation slows down the fluid and the particles suspended in it

2 The magnet inside the cylinder attracts all the ferrous impurities

3 Non-magnetic particles are retained by the mesh of the filtering cartridge

Continuous protection of the boiler

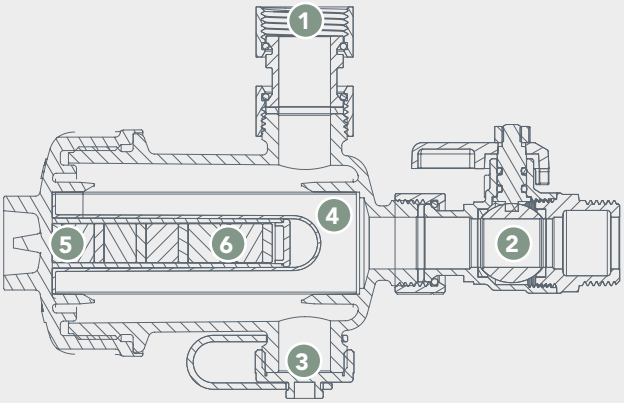

1. **Swivel connection**
   It enables to easily connect the filter to connection G 3/4"M of the boiler.
2. **Ball valve**
   It enables to intercept the return circuit.
3. **Drain cap**
4. **Filtration chamber**
5. **Neodymium magnet**
6. **Stainless steel filtering cartridge**

MAXIMUM INSTALLATION VERSATILITY

It is advised to install **RBM MG1** on the return circuit, at the inlet of the boiler, in order to protect it from any impurities in the system, especially during the start-up phase. Thanks to its extreme installation versatility, **RBM MG1** can be mounted either with the cartridge/filter body facing the front and downwards.

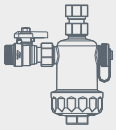

VERTICAL ASSEMBLY

HORIZONTAL ASSEMBLY

- Super compact
- Retains all impurities
- Fightscorrosion
- Increases the lifespan of the boiler
- Maintains optimum system efficiency

20.03 MAGNETIC TREATMENT | COMPACT MAGNETIC SLUDGE REMOVER FILTERS FOR BOILERS

MG LINE

Series 4162

In-line magnetic filter

Diverter body made of high mechanical performance plastic polymer.
Plastic polymer cartridge holder body.
Stainless steel AISI 304 filtering cartridge.
Elastomer hydraulic seals.
Threaded connections MM UNI-EN-ISO 228.

- Max operating pressure 4 Bar
- Operating temperature 0 ÷ +90 °C
- Neodymium magnet REN 35B = 11000 gauss
- Filtering grade 800 µm

FEATURES:

Code	Size	Kv (m³/h)	Cat.
41620400	G 1/2"	6,83	20.03
41620500	G 3/4"	6,83	20.03
41620600	G 1"	6,83	20.03
41622200	Ø22 mm	6,83	20.03
41622800	Ø28 mm	6,83	20.03

H2O LAB
water treatment

MG Line

In-line magnetic filter with frontal interception

RBM's in-line **magnetic filter** with frontal interception is the optimal solution to solve plant problems due to the presence of particles, especially rust and sand that are formed as a result of corrosion and cross- stations during normal operation of a plant. In addition to being installable on domestic boilers, it is particularly suitable for the protection of heat pumps used in domestic importants.

The integrated double shut-off makes the installation footprint very small (there are no two ball valves).

PRINCIPLE OF OPERATION

Through its effective and constant action, the magnetic filter **collects all impurities** in the system, preventing them from circulating within it, thus preventing wear and damage to the rest of the system components, but above all, exerting a continuous protective action on the boiler.

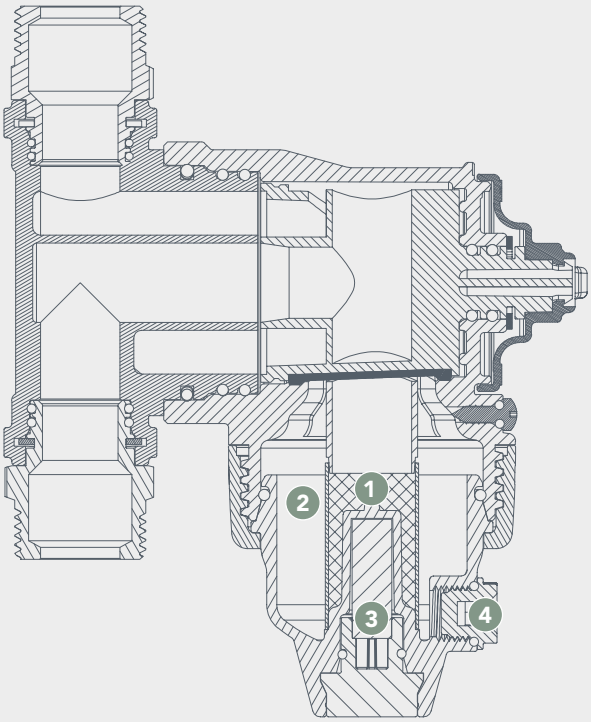

1. Filter cartridge
2. Filtration chamber
3. Removable magnet
4. Drain valve

USE

It is recommended to install it on the inlet circuit to protect it from all impurities in the system, especially during the start-up phase. It is important to respect the direction indicated by the arrow on the body to ensure better performance of the filtering action.

The articulated part allows installation on pipes:
VERTICAL, HORIZONTAL and DIAGONAL.

- Compact
- Quick and easy installation Installable in VERTICAL and HORIZONTAL
- High efficiency with internal magnet
- Mechanical and magnetic filtration
- Double interception
- Prolongs boiler life
- Ensures system efficiency

MP1

Series 3699

Self-cleaning magnetic sludge remover filter for heating pump. Complete with integrated shut-off device and discharge ball cock.

Body in plastic polymer.
AISI 304 stainless steel reinforced filtering cartridge.
Elastomer hydraulic seals.
Threaded connections MM UNI-EN-ISO 228.

- Max operating pressure 6 Bar
- Operating temperature 0 ÷ +70 °C
- Neodymium magnet B = 11000 gauss
- Filtering grade 800 µm

CERTIFICATIONS:

FEATURES:

BIM
PATENTED

Code	Size	Kv (m³/h)	Box	Carton	Cat.
36990600	G 1"	17.3	1	4	20.03
36990700	G 1"1/4	17.3	1	4	20.03

Other filtration grades available upon request.

Series 3815

Insulation casing for MP1 self-cleaning magnetic dirt separator consisting of expanded polyethylene half-casings with external antiscratch coating.

Fire behaviour class I
Density 33 kg/m³
Max operating temperature -40 ÷ +90 °C

Code	Size	Box	Carton	Cat.
38150000	1"- - F	1	1	20.03

Series 3773.A

Double swivel straight fitting 1"1/4F x 1"1/4F

Code	Size A	Size B	Box	Carton	Cat.
37730700	G 1"1/4 F	1"1/4- F	1	1	20.03
37730710	G 1"1/4 F	1"- F	1	1	20.03

Series 3773.B

Curved spherical fitting 1"1/4F x 1"1/4M

Code	Size	Box	Carton	Cat.
37730720	G 1"1/4- F	1	1	20.03

H2O LAB
water treatment

MP1

Magnetic dirt separator filter for heat exchangers

MP1 RBM is a magnetic sludge remover filter for heat pumps, complete with an integrated shut-off device and a discharge ball cock.

- High performance technopolymer body.
- AISI 304 stainless steel reinforced filtering cartridge.
- Elastomer hydraulic seals.
- Union threaded connections MM UNI-EN-ISO 228.

- Max. operating pressure 6 bar.
- Operating temperature 0 to +90°C
- Neodymium magnet B = 11000 gauss
- Filtering grade 800 µm

U.S. PATENT FOR INVENTION: N° US11826679B2

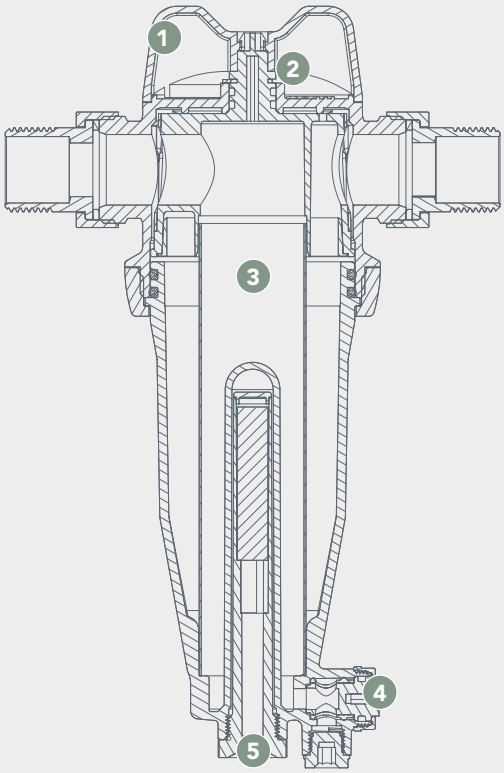

1. **Integrated shut-off device**
2. **Extra connection for temperature and/or pressure probes**
3. **Filtering mesh**
4. **Discharge ball cock**
5. **Removable magnet**

FEATURES:

- Very **low pressure** drops;
- Direct filtration with an 800 micron mesh, with other degrees of filtration available (up to 100 micron);
- **Extra connections** for temperature and/or pressure probes;
- Insulation (optional).

Removes any impurity

Self-cleaning

Excellent hydraulic properties

Extends the lifespan of heat pumps

Fights corrosion

Maintains optimum system efficiency

Complete with integrated shut-off device and discharge ball cock.

20.03 MAGNETIC TREATMENT | MAGNETIC SLUDGE REMOVER FILTERS FOR HEAT PUMPS

MP2

Series 3833

Self-cleaning magnetic sludge remover filter for heating pump.

Brass diverter valve body.
Plastic polymer cartridge holder body.
Stainless steel AISI 304 filtering cartridge.
Elastomer hydraulic seals.
Threaded connections FF UNI-EN-ISO 228.

- Max operating pressure 6 Bar
- Operating temperature 0 ÷ 70 °C
- Neodymium magnet B = 11000 gauss
- Filtering grade 800 µm

FEATURES:

BIM

Code	Size	Kv (m³/h)	Box	Cat.
38330600	G 1"	10,73	1	20.03
38330700	G 1" 1/4	11,5	-	20.03

Other filtration grades available upon request.

Series 3967

Insulation shell for MP2 self-cleaning magnetic dirt separator consisting of expanded polyethylene half-casings with external antiscratch coating.

Fire behaviour class I
Density 33 kg/m³
Max operating temperature -40 ÷ +90 °C

Code	Size	Box	Carton	Cat.
39670002	1" F	1	1	20.03

MP2 BIG

Series 3939

Self-cleaning magnetic sludge remover filter for heating pump.

Body in plastic polymer.
AISI 304 stainless steel reinforced filtering cartridge.
Elastomer hydraulic seals.
Threaded connections MM UNI-EN-ISO 228.

- Max operating pressure 6 Bar
- Operating temperature 0 ÷ 70 °C
- Neodymium magnet B = 11000 gauss
- Filtering grade 800 µm

FEATURES:

PATENT PENDING

Code	Size	Kv (m³/h)	Box	Cat.
39390600	1" F	10,73	1	20.03
39390700	1" 1/4 F	-	1	20.03

Other filtration grades available upon request.

H2O LAB
water treatment

MP2
Compact magnetic sludge remover filter for heat pumps

RBM MP2 is a compact magnetic sludge remover filter for heat pumps, complete with removable magnet and discharge ball cock**.**

RBM MP2 is particularly suitable for protecting the heat pumps used in domestic systems. The built in total passage shut-off system makes the installation overall dimension very small.

- High performance technopolymer body.
- AISI 304 stainless steel reinforced filtering cartridge.
- Elastomer hydraulic seals.
- Max operating pressure 6 Bar.
- Operating temperature 0 +90 °C.
- Neodymium magnet B = 11000 gauss.
- Filtering grade 800 m.

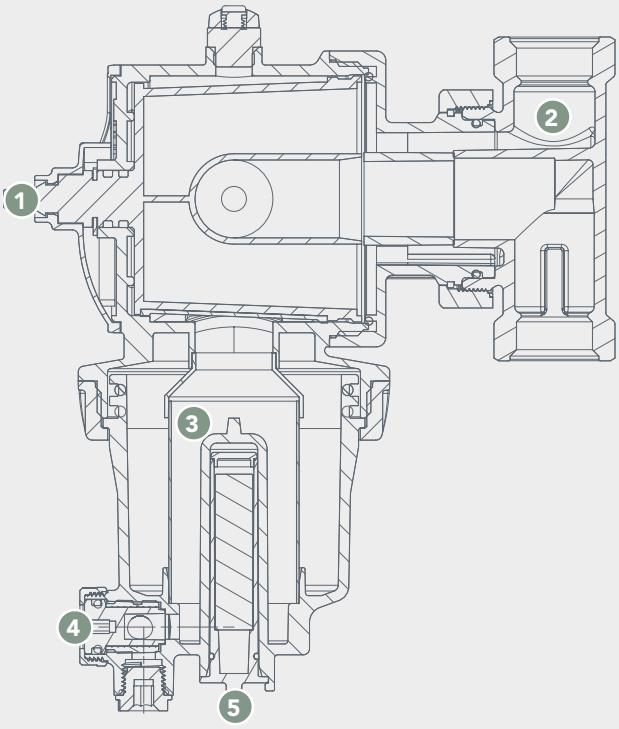

FEATURES

- Very **low pressure** drops;
- Direct filtration with an 800 micron mesh, with other degrees of filtration available (up to 100 micron);
- **Extra connections** for temperature and/or pressure probes;
- Insulation (optional).

1. **Built-in total passage shut- off system**
2. **360° adjustable diverter**
3. **Filter mesh**
4. **Built-in purge cock**
5. **Removable neodymium magnet**

- Removes any impurity
- Excellent hydraulic properties
- Can be mounted on vertical, horizontal and diagonal piping
- Extends the life span of heat pumps
- Fights corrosion
- Ensures system efficiency
- Easy dosing of the treatment fluids with 0.3 L doses
- Built-in total passage shut-off system.

SAFECLEANER2

Series 2405

Multifunction polymer magnetic dirt separator, diverter in brass, FF connection.

Plastic polymer cartridge holder body.
Nickel plated brass diverter valve.
Stainless steel AISI 304 filtering cartridge.
Elastomer hydraulic seals.
Threaded connections FF UNI-EN-ISO 228.

- Max operating pressure 4 Bar
- Operating temperature 0 ÷ +90 °C
- Neodymium magnet B = 11000 gauss
- B(T max) / B(T amb)* < 1%
- * T max = 130 °C - T amb = 21 °C

CERTIFICATIONS:

FEATURES:

BIM

Code	Size	Kv (m³/h)	Box	Carton	Cat.
24050500	G 3/4"	6,81	1	6	20.03
24050600	G 1"	7,51	1	4	20.03

Possibility to mount accessory connector series 2343.A (see p. 208) for system washing.

SAFECLEANER2

Series 2344

Multifunction polymer magnetic dirt separator, diverter in brass, with FF ball valves connection.

Plastic polymer cartridge holder body.
Nickel plated brass diverter valve.
Stainless steel AISI 304 filtering cartridge.
Elastomer hydraulic seals.
Threaded connections FF UNI-EN-ISO 228.

- Max operating pressure 4 bar
- Operating temperature 0 ÷ +90 °C
- Neodymium magnet B = 11000 gauss
- B(T max) / B(T amb)* < 1%
- * T max = 130 °C - T amb = 21 °C

CERTIFICATIONS:

FEATURES:

BIM

Code	Size	Kv (m³/h)	Box	Carton	Cat.
23440550	G 3/4"	6,81	1	6	20.03
23440650	G 1"	7,51	1	4	20.03
23440750	G 1"1/4	7,51	1	4	20.03

Possibility to mount accessory connector series 2343.A (see p. 208) for system washing.

SAFECLEANER2

Series 2319

Multifunction polymer magnetic dirt separator, with FF ball valves connection.

Plastic polymer cartridge holder body.
Plastic polymer diverter valve.
Stainless steel AISI 304 filtering cartridge.
Elastomer hydraulic seals. Threaded connections FF UNI-EN-ISO 228.

- Max operating pressure 4 Bar
- Operating temperature 0 ÷ +90 °C
- Neodymium magnet B = 11000 gauss
- B(T max) / B(T amb)* < 1%
- * T max = 130 °C - T amb = 21 °C

CERTIFICATIONS:

FEATURES:

BIM

Code	Size	Kv (m³/h)	Box	Carton	Cat.
23190550	G 3/4"	6,81	1	6	20.03
23190650	G 1"	7,51	1	4	20.03
23190750	G 1"1/4	7,51	1	4	20.03

Possibility to mount accessory connector series 2343.A (see p. 208) for system washing.

Series 3746

Insulation shell for SafeCleaner2 multi-function magnetic dirt separator consisting of expanded polyethylene half-casings with external antiscratch coating.

Fire behaviour class I
Density 33 kg/m³
Max operating temperature -40 ÷ +90 °C

Code	Size A	Box	Carton	Cat.
37460512	3/4" - 1" - 1"1/4 F	1	1	20.03

Series 943.B

SafeCleaner2 filter cap removal spanner

Code	Box	Carton	Cat.
09433005	1	1	60.01

H2O LAB
water treatment

SAFECLEANER 2

Multifunction magnetic dirt separator filter for hydraulic circuits

RBM SafeCleaner2 represents the best solution to solve plant problems due to particle pollution, especially rust and sand, that are formed due to corrosion and scale during the normal operation of a system. Through its effective and constant action, the magnetic filter collects all the impurities present in the circuit, preventing them from circulating within it, thus avoiding wear and damage of all the components making up the system.

The impurities caught by the filter build up on the bottom of it and are eliminated by simply opening the drain plug.

This way all the magnetic contaminants (ferrous residues) and non-magnetic (algae, sludge, sand...) in the system are removed.

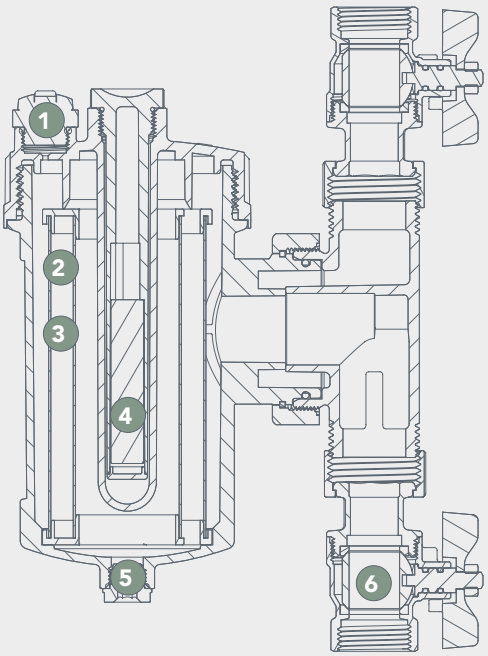

1. Manual air vent valve
2. Stainless steel filtering
3. Filtration chamber
4. Neodymium removable magnet
5. Drain cap
6. Shut-off ball valve

SIMPLE CLEANING OPERATIONS

1. Shut off the ball valves

2. Remove the magnet from the upper cap

3. Open the drain plug and let water flow out

For a more thorough cleaning of the sludge remover, the filter cap can be completely removed so as toextractthefilteringmesh and allow for cleaning and replacement operations.

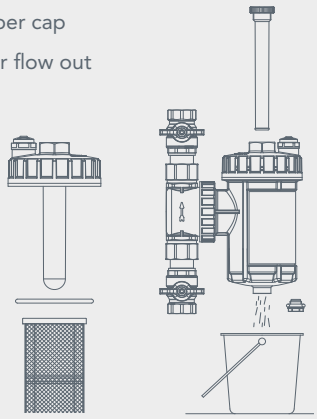

- Retains all impurities
- Self-cleaning
- Excellent hydraulic properties
- Can be mounted on vertical, horizontal and diagonal piping
- Increases the lifespan of the boiler
- Fightscorrosion
- Maintains optimum system efficiency
- Easy dosing of the treatment fluids with 0.5l doses

MAG-NUS2

Series 3548

Self-cleaning magnetic sludge remover filter for hydraulic systems. Provided with drain ball valve with hose end connector.

Brass body.
Stainless steel AISI 304 filtering cartridge.
Elastomer hydraulic seals.
Threaded connections FF UNI-EN-ISO 228.

- Max operating pressure 10 Bar
- Operating temperature 0 ÷ +100 °C
- Max operating temperature 130 °C
- Neodymium magnet B = 11000 gauss
- B(T max) / B(T amb)* < 1%
- * T max = 130 °C - T amb = 21 °C

CERTIFICATIONS:

FEATURES:

BIM

Code	Size	Kv (m³/h)	Box	Carton	Cat.
35480500	G 3/4"	9,50	1	4	20.03
35480600	G 1"	10,30	1	4	20.03

Possibility to mount accessory connector series 2343.A (see p. 208) for system washing.

Series 3747

Insulation shell for Mag-Nus2 self-cleaning magnetic dirt separator consisting of expanded polyethylene half-casings with external antiscratch coating.

Fire behaviour class I
Density 33 kg/m³
Max operating temperature -40 ÷ +90 °C

Code	Size	Box	Carton	Cat.
37470512	3/4" - 1"- F	1	1	20.03

Series 2343.A

Connector for cleaning/washing system.

Code	Size	Box	Carton	Cat.
23430500	Universal	1	20	20.03

U = Universal

Accessory to be fitted on sludge remover filters model "Dirterm UP" series 3491, "SafeCleaner2" series 2319 - 2344 - 2405, "Mag-Nus2" series 3548 and deaerators model "Airterm UP" series 2649, for system washing.

H2O LAB
water treatment

MAG-NUS 2

Self-cleaning dirt separator with magnet for hydraulic circuits

RBM Mag-nus2 is a self-cleaning dirt separator with magnet suitable for hydraulic systems. It is an extremely innovative product created to remove any type of impurity from heating systems.

RBM Mag-nus2 is the best solution to solve problems caused by particle pollution, especially rust and sand, formed by corrosion. This device helps maintaining the high efficiency of the system, preventing pipe obstruction and boiler failures.

Through its effective action, the magnet attracts iron particles avoiding damages caused by free movements of these into the system.

Impurities (iron, rust, sand, seaweeds) collected in the filter can be removed through the drain valve.

RBM Mag-nus2 must be installed with the drain valve pointing to the bottom.

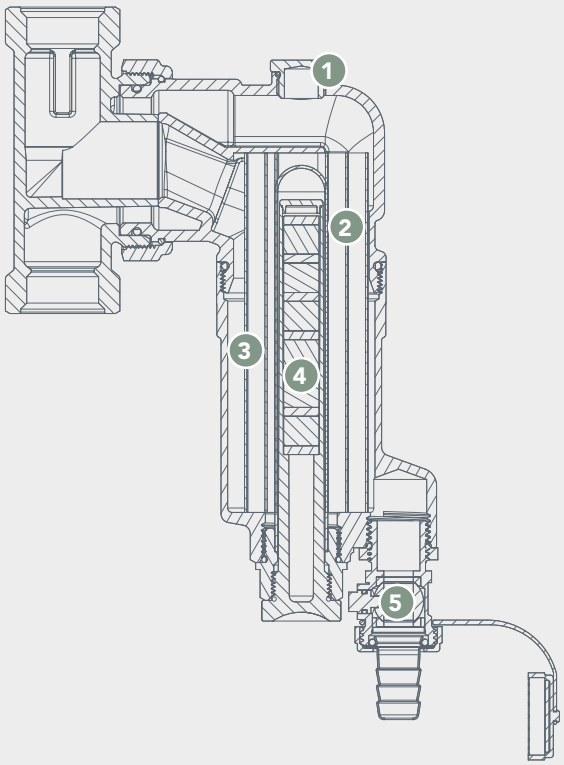

1. G 3/8"connection (for air vent valve)
2. Filtering cartridge: Stainless steel
3. Filtering chamber
4. Neodymium magnet
5. Drain valve

Thanks to the telescopic mounting ring nut, it is easy fast install **RBM Mag-nus2** in any position:

STRAIGHT

VERTICAL

DIAGONAL

In the upper part there is a female connection G 3/8" that can be used to connect also an automatic air vent valve RBM code 37.03.60.

- Removes any impurity
- Self-cleaning
- Excellent hydraulic properties
- Can be mounted on vertical, horizontal and diagonal piping
- Extends boiler lifespan
- Fights corrosion
- Ensures system efficiency
- Limited overall dimensions

H2O LAB
water treatment

CONNECTOR TO WASH THE SYSTEMS

RBM provide a connection tool easy to use and makes it easier and quicker to wash a heating system (as required by law).

The RBM connector to wash systems is compatible with all components fitted with an adjustable diverter: SafeCleaner2 (2405 - 2344 - 2319 series) and Mag-Nus2 (3548 series) dirt separator filters and Airterm UP (2649 series) deaerators.

Thanks to the **RBM connector**, there is no need to take down the circulator or look for other points to access the system: simply unscrew the filter or deaerator body, screw the connector to the previously installed diverter and carry out flushing operations.

OPERATING INSTRUCTIONS*

1.
Shut off the device by closing the ball valves and remove the main body of the filter from the diverter.

2.
Screw the connector onto the diverter body.

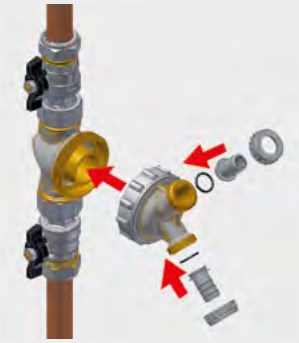

3.
Connect the inlet and drain pipes to the two outlet connectors of the connector itself, open the ball valves and carry out the flushing.

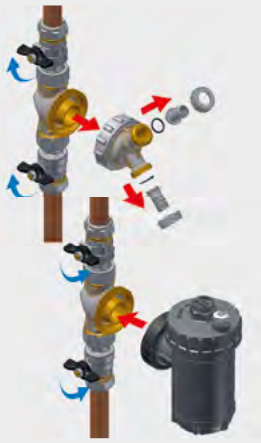

4.
After washing the system, shut it off, remove the connector and place the main body of the device back on the diverter.

* For further information, please see the product data sheet available at www.rbm.eu.

- Strong: made entirely of brass
- Quick and easy to install
- With outlet connectors
- Universal: compatible with the whole range of SafeCleaner2 and Mag-Nus2 filters, and Airterm UP deaerators

DIRTERM MAG

Series 3173.A

Self-cleaning magnetic dirt separator. Complete with drain ball valve with hose connection.

Brass body.
Stainless steel AISI 304 2 Layers filtering cartridge.
Elastomer hydraulic seals.
Threaded connections FF UNI-EN-ISO 228.

- Max operating pressure 10 Bar
- Operating temperature 0 ÷ +110 °C
- Neodymium magnet B = 11000 gauss

CERTIFICATIONS:

FEATURES:

BIM

Code	Size	Kv (m³/h)	Box	Carton	Cat.
31730400	G 1/2"	7,40	1	8	20.03
31730500	G 3/4"	12,66	1	8	20.03
31730600	G 1"	20,44	1	8	20.03
31730700	G 1"1/4	28,14	1	8	20.03
31730800	G 1"1/2	44,45	1	8	20.03
31730900	G 2"	65,58	1	8	20.03

Series 3744

Insulation shell for Dirterm self-cleaning defuser (threaded) consisting of polyethylene foam half shells with scratch-resistant film outer coating.

Fire behaviour class I
Density 33 kg/m³
Max operating temperature -40 ÷ +90 °C

Code	Size	Box	Carton	Cat.
37440412	1/2"- - F	1	1	20.03
37440512	3/4"- - F	1	1	20.03
37440612	1"- - F	1	1	20.03
37440712	1"1/4- - F	1	1	20.03
37440812	1"1/2- - F	1	1	20.03
37440912	2"- - F	1	1	20.03

DIRTERM MAG (FLANGED)

Series 3173.B

Self-cleaning magnetic sludge remover filter / flanged deaerator. With drain ball valve.

Main body and flanges in electrostatically powder-coated steel on the outside.
Stainless steel filtering cartridge.
Elastomer seals.
PN16 flanged couplings.

- Max operating pressure 10 Bar
- Max operating pressure 110°C

FEATURES:

Code	Size	Box	Carton	Cat.
31730972	DN 50	1	1	20.03
31731072	DN 65	1	1	20.03
31731172	DN 80	1	1	20.03
31731372	DN 100	1	1	20.03
31731472	DN 125	1	1	20.03
31731572	DN 150	1	1	20.03

H2O LAB
water treatment

DIRTERM MAG
Self-cleaning dirt separator

RBM Dirterm Mag represents the best solution to solve plant problems due to particle pollution formed due to corrosion and scale during the normal operation of a system. Through its effective and constant action, **RBM Dirterm Mag** collects all the impurities present in the system (even very small which traditional mesh filters are not able to eliminate), preventing them from circulating within it, thus avoiding wear and damage of all the components making up the system. The impurities stopped by **RBM Dirterm Mag** are accumulated on its bottom as long as the opening of the specific discharge valve allows the expulsion thereof.

In addition, **RBM Dirterm Mag**, is equipped with a powerful magnet to capture rust particles that are formed due to corrosion and scale during the normal operation of a system.

DIRTERM MAG
magnetic dirt separator

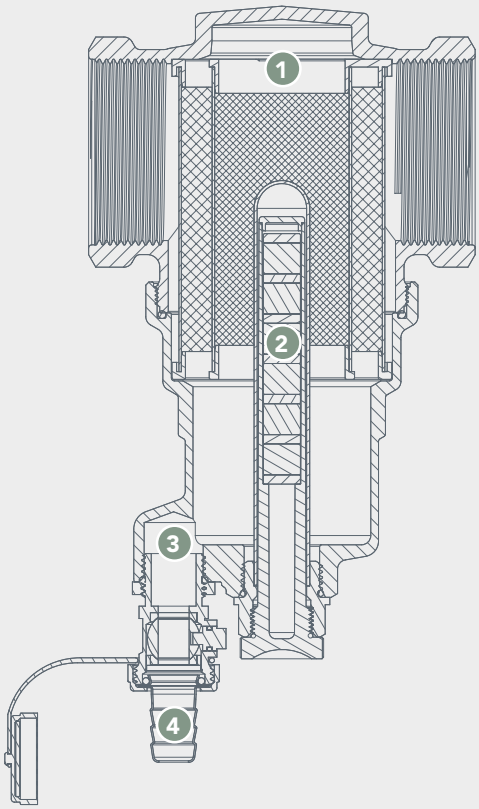

1 Innovative Cartridge
Made up of stainless steel sheets with different filtering grades. Stainless steel is an exceptional guarantee of long service life, maximum reliability in variable pressure, temperature, greater resistance to corrosion and wear conditions, generated by impurities (as it is increasingly less possible to predict what they are comprised of).
The cartridge contributes to minimising the possibility of impurities running through and offers little resistance to the flow passage, characterised by very low head loss.
The special cartridge does not obstruct the descent of the dirt into the accumulation zone in any way, therefore there is no danger of the particles being recovered by the flow running towards the outlet of the dirt separator.

2 Magnet (11.000 gauss)
Powerful magnet to capture particles magnetic that are formed due to corrosion during the normal operation of a system.

3 Accumulation area
Large and very far from the flow passage, resulting in less frequent maintenance work.

4 Purge valve
Adjustable, with hose connector and safety cap.

- Eliminates all impurities
- Self-cleaning
- Ensures system efficiency
- Magnetic
- Bi-directional

AIRTERM MAG

Series 2863

Self-cleaning dirt separator / deaerator.
Float operated deaerator.
Provided with drain ball valve with hose end connector.

Brass body.
Stainless steel AISI 304 2 Layers filtering cartridge.
Elastomer hydraulic seals.
Threaded connections FF UNI-EN-ISO 228.

- Max operating pressure 10 Bar
- Max operating discharge pressure 10 Bar
- Operating temperature 0 ÷ +110 °C
- Neodymium magnet B = 11000 gauss

CERTIFICATIONS:

FEATURES:

MAXIMUM DISCHARGE PRESSURE 10 bar

BIM

Code	Size	Kv (m³/h)	Box	Carton	Cat.
28630400	G 1/2"	7,40	1	6	20.03
28630500	G 3/4"	12,66	1	6	20.03
28630600	G 1"	20,44	1	6	20.03
28630700	G 1"1/4	28,14	1	6	20.03

Magnetic dirt separator + embedded deaerator.

Series 3745

Insulation shell for Airterm Mag self-cleaning dirt separator consisting of half-casings made of expanded polyethylene with external antiscratch coating.

Fire behaviour class I
Density 33 kg/m³
Max operating temperature -40 ÷ +90 °C

Code	Size	Box	Carton	Cat.
37450412	1/2" F	1	1	20.03
37450512	3/4" F	1	1	20.03
37450612	1" F	1	1	20.03
37450712	1"1/4 F	1	1	20.03

H2O LAB
water treatment

AIRTERM MAG
Combined self-cleaning Dirt separator / deaerator

RBM Airterm Mag combines the functions of common dirt separators and deaerators in a single solution. They are used to remove air and impurities from hydraulic circuits. In addition, is equipped with a powerful magnet to capture particles such as rust and sand that are formed due to corrosion and scale during the normal operation of a system.

MAXIMUM DISCHARGE PRESSURE 10 bar

AIRTERM MAG
Magnetic dirt separator / deaerator

ADVANTAGES

Merging two different components into one solution has allowed us to significantly reduce overall dimensions with respect to the installation of two separate products: dirt separator + deaerator.

- Eliminates all impurities
- Self-cleaning
- Ensures system efficiency
- Large capacity discharge
- High performance (max. discharge pressure 10 bar)
- Multifunction: Built-in dirt separator and deaerator
- Magnetic
- Bi-directional

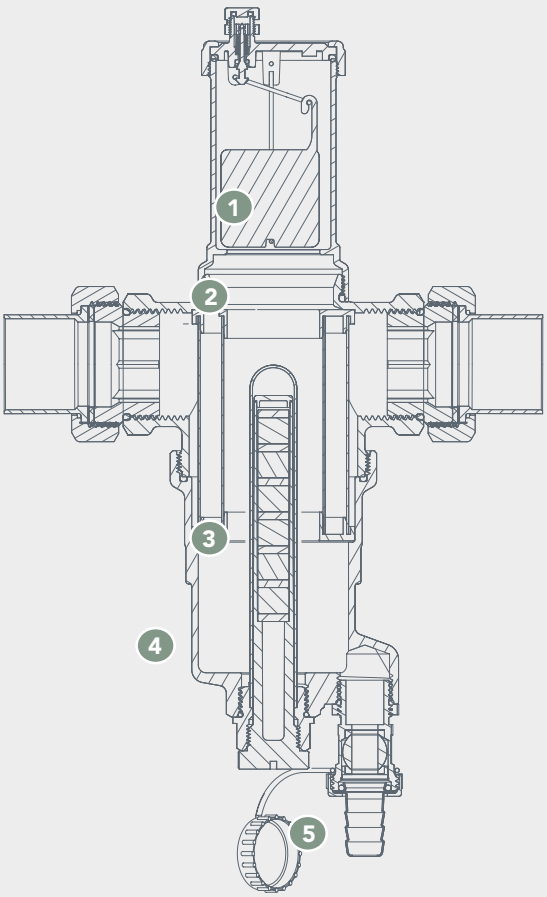

1 Passive part
High-performance air vent valve (discharge guaranteed up to 10 bar)

2 Innovative cartridge
Made up of stainless steel sheets with different filtering grades. Stainless steel is an exceptional guarantee of long service life, maximum reliability in variable pressure, temperature, greater resistance to corrosion and wear conditions, generated by impurities (as it is increasingly less possible to predict what they are comprised of). The flow goes directly through the cartridge and the continuous changes in sections lead to the creation of swirling movements which promote the release of micro bubbles. The micro bubbles settle on the internal metal cage and, after reaching an adequate size, they move upwards and are ejected by the passive part of the device. At the same time, this contributes to minimising the possibility of impurities running through and offers little resistance to the flow passage, characterised by very low head loss. The special cartridge does not obstruct the descent of the dirt into the accumulation zone in any way, therefore there is no danger of the particles being recovered by the flow running towards the outlet of the dirt separator

3 Magnet
(Only available in the RBM Airtem Mag device)
Powerful magnet to capture particles magnetic that are formed due to corrosion during the normal operation of a system

4 Accumulation area
Large and very far from the flow passage, resulting in less frequent maintenance work

5 Purge valve
Adjustable, with hose connector and safety cap

MG COMPACT

Series 3602

Compact self-cleaning magnetic deflector filter. Complete with drain ball valve. Suitable for central heating plant.

Main body in painted steel on the outside.
Steel cover.
Elastomer seals.
AISI stainless steel filter cartridge

- Max operating pressure 10 Bar
- Max operating temperature 95 °C
- Neodymium magnet
- Filtering grade 100 µm

FEATURES:

BIM

Code	Size	Kv (m³/h)	Box	Carton	Cat.
36020400	G 1/2"	5,50	1	1	20.03
36020500	G 3/4"	9,87	1	1	20.03
36020600	G 1"	16,59	1	1	20.03
36020700	G 1"1/4	31,10	1	1	20.03
36020800	G 1"1/2	50,60	1	1	20.03
36020900	G 2"	81,00	1	1	20.03

Series 3611

Insulation shell for Mg Compact self-cleaning magnetic deflector filter, consisting of polyethylene foam half shells and cover with scratch-resistant film outer coating.

Half-bearings fixed with double-sided adhesive tape already applied.

- Fire behaviour class I
- Density 33 kg/m³
- Max operating temperature -40 ÷ +90 °C

Code	Size	Box	Carton	Cat.
36110002	1/2" ÷ 2"	1	1	20.03

H2O LAB
water treatment

MG COMPACT
Self-cleaning dirt separator with magnets for boiler rooms

RBM MG Compact, a self-cleaning multifunction dirt separator filter with magnets for boiler rooms, represents the best solution to solve plant problems due to pollution resulting from particles of sand and rust that form due to corrosion and incrustations during the normal operation of a system. Thanks to **its powerful magnetic capacity, its size and the flanged connections, MG Compact is used in industrial, commercial and medium and large scale civil systems**. Through its effective and constant action, the filter collects all the impurities present in the system, preventing them from circulating within it, thus avoiding wear and damage of all the components making up the system.

The impurities blocked by the filter accumulate inside the basket. Cleaning starts by opening the designated discharge valve. In this way all the **magnetic contaminants** (ferrous residues) and **non-magnetic** (algae, sludge, sand...) in the system are removed.

AVAILABLE INSTALLATION SETUPS:

- Removes any impurity
- Self-cleaning
- Maintains optimum system efficiency
- Application in industrial, commercial and medium and large-scale civil systems
- Reinforced stainless steel filtering mesh with 100 micron filtering degree
- Fitted with a dosage point to add treatment fluids, easily accessible
- Limited overall dimensions (in relation to the product category)
- Reversible couplings

Option of in-line installation on a heating system

Reduced maintenance costs:

> Magnets protected from contact with water, easy to clean

> The large removable basket with check valve prevents impurities from falling into the filter

> The large water content extends maintenance intervals

> The possibility of cleaning the filter without emptying completely reduces the amount of chemical additives to be replenished after each maintenance operation

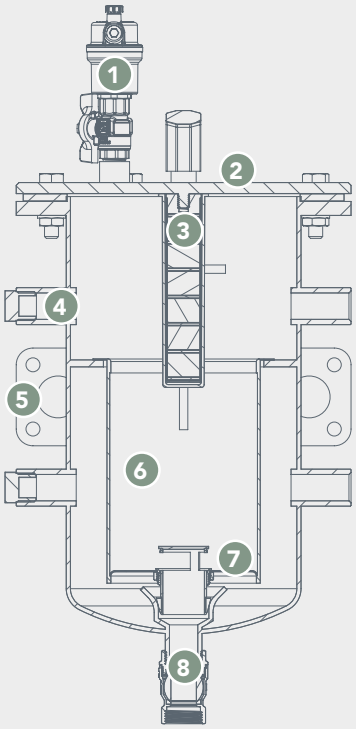

1. **Automatic air vent valve**
   to eliminate air at the filling stage, complete with the ball shut-off valve.
2. **Dosage point**
   to add treatment fluids. Aesily accessible. Plugged when supplied. G 1/2" plug.
3. **Magnetic filtering unit**
   powerful neodymium magnets to capture ferrous particles such as rust that form due to corrosion during the normal operation of a system, metal debris, processing residues, etc. The magnet assembly is protected from direct contact with water by a removable conduit that makes filter cleaning operations easier.
4. **Sudden section increase**
   It causes the fluid to slow down. The settling of particles due to the effect of gravity is favoured.
5. **Wall mounting bracket**
6. **Filtering mesh**
   stainless steel stretched mesh (100 micron filtration degree) contained in a basket that can be easily pulled out from above. This is equipped with an automatic closing shutter, located at the bottom, to prevent leakage of impurities during maintenance.
7. **Accumulation zone**
   Large and very far from the flow passage, resulting in less frequent maintenance work
8. **Drain ball valve**
   Size 3/4"

MG PLUS

Series 3541

Self-cleaning magnetic deflector filter. Complete with drain ball valve. Suitable for thermal power plant.

Main body and flanges in painted steel on the outside
Steel cover
Elastomer seals
AISI stainless steel filter basket
Pair of pressure gauges, 0-10 bar scale
PN16 flanged couplings

- Max operating pressure 10 Bar
- Max operating temperature 95 °C
- Neodymium magnets
- Filtering grade 100 µm

FEATURES:

BIM

Code	Size	Kv (m³/h)	Box	Carton	Cat.
35410910	DN 50	14* - 23**	1	1	20.03
35411010	DN 65	35* - 46**	1	1	20.03
35411110	DN 80	42* - 57**	1	1	20.03
35411310	DN 100	55* - 73**	1	1	20.03
35411410	DN 125	100* - 131**	1	1	20.03
35411510	DN 150	141* - 173**	1	1	20.03

* Flow rate with 20 kPa pressure drop
** Flow rate with 30 kPa pressure drop

Flange suitable for coupling with counter-flange UNI EN 1092-1.

Series 3601

Insulation shell for Mg Plus self-cleaning magnetic deflector filter, consisting of polyethylene foam half shells and cover with scratch-resistant film outer coating.

Half-bearings fixed with double-sided adhesive tape already applied.

- Fire behaviour class I
- Density 33 kg/m³
- Max operating temperature -40 ÷ +90 °C

Code	Size	Box	Carton	Cat.
36010902	DN 50	1	1	20.03
36011002	DN 65	1	1	20.03
36011102	DN 80	1	1	20.03
36011302	DN 100	1	1	20.03
36011402	DN 125	1	1	20.03
36011502	DN 150	1	1	20.03

H2O LAB
water treatment

MG PLUS
Self-cleaning dirt separator with magnets for boiler rooms

RBM MG Plus, a self-cleaning multifunction dirt separator filter with magnets for boiler rooms, represents the best solution to solve plant problems due to pollution resulting from particles of sand and rust that form due to corrosion and incrustations during the normal operation of a system. Thanks to **its powerful magnetic capacity, its size and the flanged connections, MG Plus is used in industrial, commercial and large-scale civil systems.** Through its effective and constant action, the filter collects all the impurities present in the system, preventing them from circulating within it, thus avoiding wear and damage of all the components making up the system. The impurities blocked by the filter accumulate inside the basket. Cleaning starts by opening the designated discharge valve. In this way all the magnetic contaminants (ferrous residues) and non-magnetic (algae, sludge, sand...) in the system are removed.

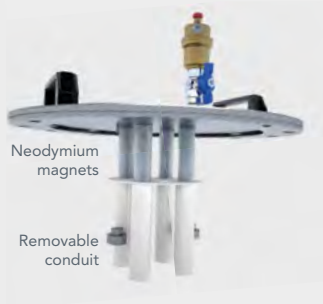

- Removes any impurity
- Self-cleaning
- Maintains optimum system efficiency
- Application in industrial, commercial and large-scale civil systems
- Reinforced stainless steel filtering mesh with 100 micron filtering degree
- Fitted with a dosage point to add treatment fluids, easily accessible
- Limited overall dimensions (in relation to the product category)

Reduced maintenance costs:

> Magnets protected from contact with water, easy to clean

> The large removable basket with check valve prevents impurities from falling into the filter

>The large water content extends maintenance intervals

> The possibility of cleaning the filter without emptying completely reduces the amount of chemical additives to be replenished after each maintenance operation

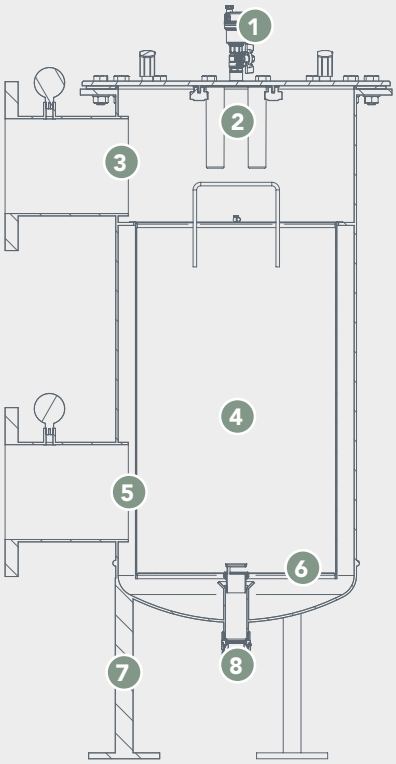

1. **Automatic air vent valve**
   to eliminate air at the filling stage, complete with the ball shut-off valve
2. **Magnetic filtering unit**
   powerful neodymium magnets to capture ferrous particles such as rust that form due to corrosion during the normal operation of a system, metal debris, processing residues, etc. The magnet assembly is protected by direct contact with water by a removable conduit that makes filter cleaning operations easier
3. **Sudden section increase**
   it causes the fluid to slow down. Average incoming speed: 2.5 m/s
   Average speed after the filter inlet: 0.2 m/s.
   The settling of particles due to the effect of gravity is favoured
4. **Filtering mesh**
   stainless steel stretched mesh (100 micron filtration degree) contained in a basket that can be easily pulled out from above. This is equipped with an automatic closing shutter, located at the bottom, to prevent leakage of impurities during maintenance
5. **Pair of pressure gauges**
   through the display of the differential pressure, it is possible to assess the degree of clogging of the filter
6. **Accumulation zone**
   Large and very far from the flow passage, resulting in less frequent maintenance work
7. **Base**
   adjustable height
8. **Drain ball valve**
   Size 1" 1/4

20.03 MAGNETIC TREATMENT | MAGNETIC ANTI-SCALE DEVICE

Series 304.A

Magnetic anti-scale device for physical treatment of water. Permanent annular magnets encapsulated in food-grade plastic polymer.

External nickel plated brass body.
Sintered ring magnet.
Elastomer seals.
Union threaded connections MM UNI-EN-ISO 228 up to 2".
2"1/2 threaded connections (UNI-EN-ISO 228).

- Magnetic field 700 GAUS
- Residual induction from 2300 to 3700 GAUS
- Max operating pressure 16 Bar
- Max operating temperature 80 °C

CERTIFICATIONS:
DHW

FEATURES:

Code	Size	Kv (m³/h)	Box	Carton	Cat.
03040400	G 1/2"	10,20	1	6	20.03
03040500	G 3/4"	14,80	1	6	20.03
03040600	G 1"	26,00	1	6	20.03
03040700	G 1"1/4	30,40	1	1	20.03
03040800	G 1"1/2	63,00	1	1	20.03
03040900	G 2"	74,00	1	1	20.03
03041000	G 2"1/2	125,00	1	1	20.03
03041100	G 3"	160,00	1	1	20.03
03041300	G 4"	252,00	1	1	20.03

4029.B

Chemical water treatment kit with MG1 dirt separator filter

MG1, with its effective and constant action, collects all impurities in the system, preventing them from circulating within it. This prevents wear and damage to the rest of the system components, in particular circulators and heat exchangers.
Spray Protect 1 is a professional multifunctional neutral product useful for inhibiting corrosion, lime deposits, noise in heating systems (and boilers), hydrogen formation inside radiators, microbial and algal growth in heating and cooling systems.
Spray Clean 4 is a neutral product for cleaning new and old systems from limestone and iron deposits, sludge, oily substances, grease, iron deposits, microbial and algal growth.

The kit consists of:
- MG1, under-boiler magnetic sludge remover filter
- Spray Protect 1, protective spray for cooling and heating systems
- Spray Clean 4, spray can cleaner for heating and cooling systems

Code	Box	Carton	Cat.
40290500	1	4	20.03

4030.B

Chemical water treatment kit with MG2 dirt separator filter

MG2, with its effective and constant action, collects all impurities in the system, preventing them from circulating within it. This prevents wear and damage to the rest of the system components, in particular circulators and heat exchangers.
Spray Protect 1 is a professional multifunctional neutral product useful for inhibiting corrosion, lime deposits, noise in heating systems (and boilers), hydrogen formation inside radiators, microbial and algal growth in heating and cooling systems.
Spray Clean 4 is a neutral product for cleaning new and old systems from limestone and iron deposits, sludge, oily substances, grease, iron deposits, microbial and algal growth.

The kit consists of:
- MG2, under-boiler magnetic sludge remover filter
- Spray Protect 1, protective spray for cooling and heating systems
- Spray Clean 4, spray can cleaner for heating and cooling systems

Code	Box	Carton	Cat.
40300500	1	6	20.03

Series 4031.B

Chemical water treatment kit with filter for MP1 heat pumps

MP1, with its effective and constant action, collects all impurities in the system, preventing them from circulating within it. This prevents wear and damage to the rest of the system components, in particular circulators and heat exchangers. The impurities stopped by the filter are accumulated on its bottom as long as the opening of the specific discharge cock allows the expulsion thereof.
Protective 100 is a professional multifunctional neutral product for inhibiting corrosion, lime deposits, noise in heating systems as well as boilers, hydrogen formation inside radiators, microbial and algal growth in heating and cooling systems.
Wash Clean 400 is a neutral product for cleaning new and old systems from limestone and iron deposits, sludge, oily substances, grease, iron deposits, microbial and algal growth.

The kit consists of:
- MP1, under-boiler magnetic sludge remover filter
- Protective 100, protective agent for cooling and heating systems in 1 kg can
- Wash Clean 400, cleaner for heating and cooling systems in 1 kg can

Code	Box	Carton	Cat.
40310600	1	6	20.03

Series 4032.B

Chemical water treatment kit with filter for compact heat pump MP2

MP2, with its effective and constant action, collects all impurities in the system, preventing them from circulating within it. This prevents wear and damage to the rest of the system components, in particular circulators and heat exchangers. The impurities stopped by the filter are accumulated on its bottom as long as the opening of the specific discharge cock allows the expulsion thereof.
Protective 100 is a professional multifunctional neutral product for inhibiting corrosion, lime deposits, noise in heating systems as well as boilers, hydrogen formation inside radiators, microbial and algal growth in heating and cooling systems.
Wash Clean 400 is a neutral product for cleaning new and old systems from limestone and iron deposits, sludge, oily substances, grease, iron deposits, microbial and algal growth.

The kit consists of:
- MP2, compact magnetic sludge remover filter
- Protective 100, protective agent for cooling and heating systems in 1 kg can
- Wash Clean 400, cleaner for heating and cooling systems in 1 kg can

Code	Box	Carton	Cat.
40320600	1	6	20.03

20. WATER TREATMENT

20.04 CHEMICAL TREATMENT

Condensation neutraliser filter

Domestic polyphosphate dosers

Chemical conditioners for air-conditioning circuits

NT1

Series 3286

Acid condensation neutralising filter.

Transparent PA polyamide cartridge body.
PA polyamide caps and hose connection fittings.
Polymer fastening collar.
AISI 304 stainless steel neutralising mesh door.
Elastomer hydraulic seals.
MgO-based neutralising bioceramic compound.

Kit inclusive of:
- Acid condensation neutralising filter;
- Fastening collar;
- Pair of elbow hose connection fittings;
- 2 MgO-based neutralising bioceramic compound loads.

Code	Size A	Size B	Box	Carton	Cat.
32860500	G 3/4"	DN 20	1	6	20.04

Warnings: RBM recommends replacing the residual load annually, at the end or beginning of the season, after the filter has been cleaned.
Use RBM original parts exclusively (code 3290.00.00).

Series 3287

Pair of straight hose connection fittings complete with flat seat seal.

PA polyamide fittings.

Code	Size A	Size B	Box	Carton	Cat.
32870516	3/4"	DN 16	6	60	20.04
32870520	3/4"	DN 20	6	60	20.04

Series 3288

Pair of elbow hose connection fittings complete with flat seat seal.

PA polyamide fittings.

Code	Size A	Size B	Box	Carton	Cat.
32880516	3/4"	DN 16	6	60	20.04
32880520	3/4"	DN 20	6	60	20.04

Series 3289

Insulation shell for NT1 anti-condensation filter made of expanded polyethylene half-bearings with external antiscratch coating.

Half-bearings fixed with velcro already applied.

- Fire behaviour class1
- Density 33 kg/m³
- Max operating temperature -40 ÷ +90 °C

Code	Size	Box	Carton	Cat.
32890000	3/4"	1	5	20.04

Required with the installation of NT1 on outdoor boilers, with condensation discharge into the eaves.

Series 3290

MgO-based neutralising bioceramic compound.

Code	Box	Carton	Cat.
32900000	10	40	20.04

H2O LAB
water treatment

NT1

Acid condensation neutralising filter for condensing boilers

Protects your discharge system against corrosion by neutralising the ph of condensation

The installation of condensing boilers is spreading rapidly thanks to new regulatory requirements. However, these heat generators produce acid condensation which must be neutralised before disposal so that it cannot cause damage to the system piping and to the environment. By installing **RBM NT1** downstream of the boiler, condensation passes inside the neutralising cartridge which neutralises the pH causing to fall within the limits provided, to allow free draining without damaging pipes or gutters.

From acid pH to alkaline pH thanks to a heart made of calcium carbonate granules.

- Fights corrosion by acid condensation
- Resistant to chemicals dissolved in the steam which condenses in the boiler
- Quick & easy maintenance

1. **Hose connection fittings**
   They allow quick and easy assembly
2. **Atmospheric vent cap**
   As required by the UNI 7129-05 standard. When removed, allows refilling of the neutralising medium
3. **Transparent body**
   Thanks to the transparent plastic body, the neutralizing medium level can be constantly monitored
4. **Neutralising medium**
   Contained in a stainless steel mesh,the neutralising medium has an operating time that varies according to the acidity, the amount of condensation to process and hours of operation of the boiler. Therefore, it must be refilled periodically and replaced in full every year.
5. **Closure cap**
   It facilitates cleaning operations of the stainless steel mesh.

PH ALWAYS UNDER CONTROL

NT1 allows the pH of the water discharged to be always maintained within an optimal range, even if the condensation liquid should remain in the filter for a long time (for example, in the case of switch-off due to inactivity, during the night, etc.).

Install RBM NT1 always in a vertical position

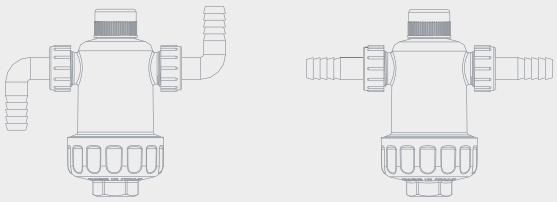

DP1

Series 3928

Polyphosphate doser.

Technopolymer body with high mechanical performance
EPDM PEROX hydraulic seals
Product charge: brilliant blue crystals of food grade polyphosphate in a glassy state (70 g)
Brass connection fitting can

- Max operating pressure 6 bar
- Operating temperature 5÷30°C
- T°max for antiscale actions 100°C
- T°max for anti-corrosive actions: 180°C
- Product dosage: max. 5mg/l of P2O5
- Charge duration: 35,000 l (approx. 6 months)

Polyphosphate doser

Code	Size	Box	Carton	Cat.
39280400	1/2"	1	9	20.04

Reload

Code	Size	Box	Cat.
40510000	1/2"	1	20.04

Protects systems against limescale and corrosion.
Supplied with nr. 1 refill of sodium polyphosphate.

H2O LAB
water treatment

DP1
Polyphosphate Doser

The **DP1** polyphosphate doser provides the water with a suitable antiscale and **anti-corrosive treatment, leaving its potability characteristics unchanged**.
It is mainly applied upstream of domestic hot water supply systems, directly at the cold domestic water inlet to the boiler.

The DP1 polyphosphate doser has a small footprint, **simple and quick installation, low product consumption** and low maintenance costs. Equipped with a ½" swivel brass shank, it **adapts to all types of boilers**; the built-in shut-off system allows maintenance without the need for other shut-off devices. A polyphosphate charge is included in the package.
The use of polyphosphate silicates guarantees:

- Scaling inhibition. Helps reduce the formation of adherent deposits of insoluble carbonates on heat exchange surfaces.
- Attenuation of previous scaling (restorative effect). Progressive reduction of the layer of deposits formed in the installations in the absence of suitable chemical conditioning.
- Corrosion inhibition. Hinders corrosive phenomena by facilitating the formation of a protective film on parts in contact with water.

OPEN BYPASS MODE

1. Input flow
2. Passage through the filter cartridge
3. Passage through the polyphosphate doser
4. Treated water passage and subsequent entry into the system
5. Flow entry into the system

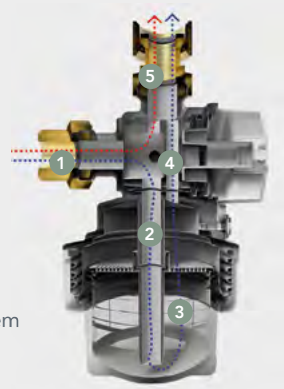

CLOSED BYPASS MODE

1. Input flow
2. Closed filtering chamber
3. Open by-pass
4. Flow entry into the system

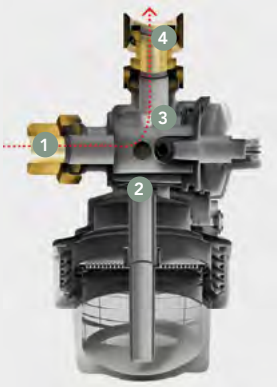

THE FILTRATION PRINCIPLE

Scaling is the result of calcium and magnesium deposits on pipe walls, exchange surfaces and control and regulating parts.
The amount of deposit depends on:

- the temperature of the water;
- water hardness;
- the volume of water used.

The sodium and potassium **polyphosphates** inside the container **combine with calcium and magnesium** ions to form a chemical compound similar to limescale but which cannot adhere to pipe surfaces. The precipitation of calcium and magnesium and **the consequent formation of lime deposits is prevented**.

In addition, polyphosphates are deposited on the surface of the pipes, forming a **protective film to protect them from fouling and remove already deposited limescale**.

INSTALLATION

The polyphosphate doser is to be installed on the domestic cold water line at the boiler inlet. **It can be installed vertically or horizontally**.
Do not install the DP1 in conditions of direct exposure to the weather, and installation in environments where the temperature may fall below 5°C (frost danger) is not recommended.

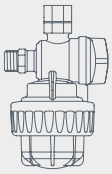

VERTICAL INSTALLATION

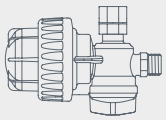

HORIZONTAL INSTALLATION

- Supercompact
- High efficiency
- Eliminates impurities
- Fights corrosion
- Increases the lifespan of the boiler
- Maintains optimum system efficiency
- Quick and easy to install
- Limited overall dimensions

DP LINE

Series 4161

In-line polyphosphate doser.

Technopolymer body with high mechanical performance
EPDM PEROX hydraulic seals
Product charge: brilliant blue crystals of food grade polyphosphate in a glassy state (70 g)
Brass connection fitting can

- Max operating pressure 6 bar
- Operating temperature 0÷30°C
- T°max for antiscale actions 100°C
- T°max for anti-corrosive actions: 180°C
- Product dosage: max. 5mg/l of P2O5
- Charge duration: 35,000 l (approx. 6 months)

In-line polyphosphate doser

Code	Size	Kv (m³/h)	Cat.
41610400	1/2"	6,03	20.04
41610500	3/4"	6,03	20.04
41610600	1"	6,03	20.04
41612200	Ø22 mm	6,03	20.04
41612800	Ø28 mm	6,03	20.04

Reload

Code	Size	Box	Cat.
40510000	1/2"	1	20.04

H2O LAB
water treatment

DP Line

In-line polyphosphate dispenser with frontal shut-off

The **DP LINE** polyphosphate dosing unit provides proper anti-scale and anti-corrosion treatment to water, keeping its potability characteristics unchanged.
It finds application mainly upstream of water supply systems of domestic hot water production systems, directly at the inlet of domestic cold water to the boiler. The **DP LINE** polyphosphate dosing unit has a **small footprint**, ensures **simple and quick installation**, low product consumption and negligible maintenance costs.
Equipped with a ½" brass swivel shank, it fits all types of boilers, and the built-in shut-off system allows maintenance without the need for other shut-off devices.
A polyphosphate charge is included in the package. The use of polyphosphate silicates guarantees:

- fouling inhibition: helps reduce the formation of adherent deposits of insoluble carbonates on heat exchange surfaces.
- attenuation of previous fouling (restorative effect): progressive reduction of the layer of deposits formed in the systems in the absence of suitable chemical conditioning.
- corrosion inhibition: hinders corrosive phenomena by facilitating the formation of a protective film on parts in contact with water..

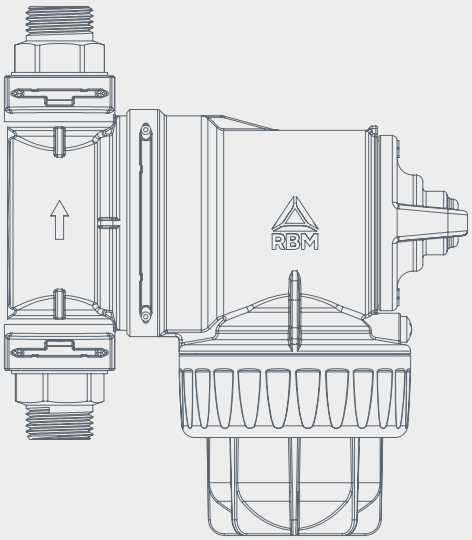

THE PRINCIPLE OF OPERATION

Scaling results from the deposition of calcium and magnesium (hardness-determining salts) on pipe walls, exchange surfaces, and control and regulating organs.

The amount of deposition depends on:

- on the temperature of the water.
- on the hardness of the water.
- on the volume of water used.

Unlike other salts, calcium and magnesium salts become less soluble as temperature increases; therefore, all systems in which water is heated especially those for domestic hot water production are at risk of fouling.

The parameter to be monitored is **total hardness**, the sum of the concentrations of calcium and magnesium ions and responsible for scaling phenomena.

Bicarbonates of calcium and magnesium are chemically in equilibrium with carbonates (of calcium and magnesium), water, and carbon dioxide. As temperature increases, soluble bicarbonates turn into insoluble carbonates, forming lime scale and releasing carbon dioxide.

The sodium and potassium polyphosphates inside the container combine with calcium and magnesium ions to form a chemical compound similar to limestone but unable to adhere to pipe surfaces. **Precipitation of calcium and magnesium and subsequent formation of lime deposits is prevented**. In addition, polyphosphates are deposited on the surface of pipes, forming a **protective film** to protect them from fouling and **remove** already deposited limescale .

The use of polyphosphates is part of chemical conditioning treatments (as expressed by UNI 8065), which are based on the necessary dosage of salts with respect to the amount of cold water flowing through the device, **without changing the hardness of the water**.

- Shut-off for maintenance included
- Quick and easy installation
- Installable in VERTICAL and HORIZONTAL
- High efficiency
- Eliminates impurities
- Fights corrosion
- Prolongs boiler life
- Ensures the efficiency of the system

PROTECTIVE 100

Series 3917

Protection for heating and cooling systems.

Protective 100 is a neutral inhibitor of corrosion, limescale formation and even microbial growth and is suitable for both heating and cooling circuits, including those containing aluminium.

- Anticorrosive, anti-scaling and antifouling
- Inhibits corrosion, lime scale, microbial and algal growth
- Prevents the formation of hydrogen gas
- Effectively protects new and old systems
- Compatible with all metals, including aluminium
- Neutral, non-corrosive product that is easy to handle
- Insensitive to overdoses
- Helps prevent noise in the boiler
- Long-lasting product

Code	Weight (kg)	Box	Carton	Cat.
39170002	1	1	9	20.04

The dose of 1 litre of Protective 100 can treat:
- up to 200 l hydraulic content;
- up to 200 m² of radiant system;
- up to 20 radiators.

For best results, it is recommended to rinse the system well before applying the protective agent.

Avoid contact with eyes and skin. Use goggles and rubber gloves.
The solution of PROTECTIVE 100 in water at the recommended dosages complies with Italian Legislative Decree 152/06 and is discharged into the public sewage system. The product is compatible with most plastics.

WASH CLEAN 400

Series 3918.A

Cleaner for heating and cooling systems.

Wash Clean 400 is a neutral product for cleaning new and existing heating and cooling systems. It cleans systems from limescale, microbial and algal growth, sludge, oily substances, grease and iron deposits.
The action of Wash Clean 400 restores the full efficiency of systems, boilers and heat pumps over time.

- Compatible with all metals, including aluminium
- Neutral, non-corrosive product that is easy to handle
- Insensitive to overdoses
- Restores normal system performance

Code	Weight (kg)	Box	Carton	Cat.
39180002	1	1	9	20.04

The dose of 1 litre of Wash Clean 400 can treat:
- up to 200 l hydraulic content;
- up to 200 m² of radiant system;
- up to 20 radiators.

It is possible to leave the system running during the cleaning action of Wash Clean 400.
RECOMMENDED ACTION TIME: 2 weeks of continuous circulation in hot and 4 weeks in cold.

Avoid contact with eyes and skin. Use goggles and rubber gloves. The solution of WASH CLEAN 400 in water at the recommended dosages complies with Italian Legislative Decree 152/06 and is discharged into the public sewage system. The product is compatible with most plastics.

WASH CLEAN 400H

Series 3918.B

Fast universal cleaner.

Wash Clean 400 is a fast sequestering neutral product for cleaning new or existing heating and cooling systems.
Product with a broad spectrum of action; removes deposits of limescale, iron oxides, sludge and bacterial filaments.
The action of Wash Clean 400H restores the full efficiency of systems, boilers and heat pumps.

- Suitable for boilers and heat pumps, both in heating and cooling
- Product for use in multi-material systems containing aluminium

Code	Weight (kg)	Box	Carton	Cat.
39180012	1	1	9	20.04

The dose of 1 litre of Wash Clean 400H can treat:
- up to 100 l hydraulic content;
- up to 100 m² of radiant system;
- up to 10 radiators.

It is possible to leave the system running during the cleaning action of Wash Clean 400H.
RECOMMENDED ACTION TIME: maximum 3 days or maximum one day if aluminium is present.
To be used as an alternative to Wash Clean 400 in the case of particularly compromised systems and/or clogged terminals, or when it is necessary to reduce the cleaning time.

Avoid contact with eyes and skin. Use goggles and rubber gloves. The solution of WASH CLEAN 400H in water at the recommended dosages complies with Italian Legislative Decree 152/06 and is discharged into the public sewage system. The product is compatible with most plastics.

ECO PUMP

Series 3919

Loading pump.

Portable, manually pressurised container for loading chemicals into closed circuit heating and cooling systems.
Complete with safety valve.

- Maximum capacity: 3 litres
- Maximum pressure: 3 bar
- Loading hose: Ø 8 mm

- Supplied:
- adjustable shoulder strap
- dispensing gun with Ø 8 mm quick coupling
- 1.5 metres of Ø 8x6 mm rilsan pipe
- system connection fittings, Ø 8 mm quick coupling with male swivel connection with o-ring seal M 1/8", M 1/4" and M 3/4".

Code	Box	Carton	Cat.
39190002	1	48	20.04

Suitable for loading conditioning chemicals; the supplied fittings allow injection through all RBM physical and magnetic treatment devices. Environmentally sustainable and cost-effective, it avoids the need for expensive spray cans, reduces waste management, is reusable, injects the right amount of product and overcomes the capacity limits of spray cans.

Series 3907.A

Accessory for MG1 filter.

Ball valve for injecting the conditioning agent through the magnetic filter under the boiler.

Brass body.
Rotary F 3/4" filter connection.
Connection to RBM Eco Pump F 1/4".

Code	Box	Carton	Cat.
39070200	1	60	20.04

Can be combined with the swivel quick-coupling fitting supplied with the RBM Eco Pump.

Series 3907.B

Accessory for MG2 filter.

Ball valve for injecting the conditioning agent through the magnetic filter under the boiler.

Brass body.
MF 1/4" couplings

Code	Box	Carton	Cat.
39070210	1	150	20.04

Can be combined with the swivel quick-coupling fitting supplied with the RBM Eco Pump.

SPRAY PROTECT 1

Serie 4027

Protection for heating and cooling systems

Spray Protect 1 is a professional multifunctional neutral product for the protection of new or existing heating and cooling systems.
Inhibits corrosion, lime scale, microbial and algal growth.
Prevents the formation of hydrogen gas.

- Compatible with all metals, including aluminium.
- Neutral, non-corrosive product that is easy to handle.
- Insensitive to overdoses.
- Long-lasting product.

Code	Capacity (l)	Box	Cat.
40270002	0,4	6	20.04

The dosage of Spray Protect 1 for optimal protection is 400 ml per 150 litres of system water.
Spray Protect 1 can be introduced directly into the full system either in a radiator through the vent valve, through the under-boiler dirt separator filter or anywhere where proper product dilution can take place. Avoid low points in the system.

Spray Protect 1 is intended for professional use in the treatment of heating and cooling systems only. The chemical treatment of domestic systems is regulated by UNI-CTI 8065/19.

SPRAY CLEAN 4

Serie 4028

Cleaner for heating and cooling systems

Spray Clean 4 is a neutral product for cleaning new and existing heating and cooling systems.
The Spray Clean 4 action restores full efficiency to the boiler and the devices within the circuits.

- Compatibility with METALS and ALLOYS at recommended dosages: steel, black iron, galvanised iron, stainless steel, copper, bronze, brass, aluminium.
- Compatibility with PLASTICS and RUBBERS at recommended dosages: generally compatible with most plastics.
- Compatible with propylene and ethylene glycols.

Code	Capacity (l)	Box	Cat.
40280002	0,4	6	20.04

The dosage of Spray Clean 4 for optimal cleaning is 400 litre per 150 litres of system water (0.26%).
Spray Clean 4 can be introduced directly into the full system either in a radiator through the vent valve, through the under-boiler dirt separator filter or anywhere where proper product dilution can take place. Avoid low points in the system.

Spray Clean 4 is intended for professional use in the treatment of heating and cooling systems only. The chemical treatment of domestic systems is regulated by UNI-CTI 8065/19.

Series 304.B

Test kit to control water hardness.

Easy-to-use supplied with case.

Code	Box	Carton	Cat.
03040002	1	1	20.04

Series 4066

Protect Dosing test kit

Rapid colorimetric test to verify the correct presence of Spray Protect 1 or Protective 100 liquid in the water of the heating and cooling circuit.
Suitable for the correct compilation of the plant logbook when the plant is started up for the first time and for subsequent periodic control checks.
Complete with box, instruction sheet, 20 ml tube, 2 15 ml bottles of reagent product and one 25 ml bottle of control liquid.
One pack allows about 25 tests to be performed.

The pack includes:
- box
- instruction sheet
- 20 ml tube
- No. 2 x 15 ml bottles of reagent product
- No. 1 25 ml bottle of control liquid

Code	Box	Carton	Cat.
40660002	1	1	20.04

RBM CHEMICALS

The combination of the many years of experience of those who manufacture equipment and components and those who manage and maintain them provides the solution for the care and **reduction of the risk of deterioration in air conditioning systems** caused by limestone deposits, sludge, and bacterial filaments.

The maintenance and management experience gained from heating systems and generators has enabled the **continuous improvement** and adjustment of the **formulations of the chemical products** selected here, also addressing the risks of improper dosing or prolonged residence within the circuits.

Protective 100
Series 3917
Protection for heating and cooling systems
Weight: 1 Kg

Wash Clean 400
Series 3918.A
Cleaner for heating and cooling systems
Weight: 1 Kg

Wash Clean 400H
Series 3918.B
Fast universal cleaner
Weight: 1 Kg

Spray protect 1
Series 4027
Protection for heating and cooling systems
Weight: 400 ml

Spray clean 4
Series 4028
Cleaner for heating and cooling systems
Weight: 400 ml

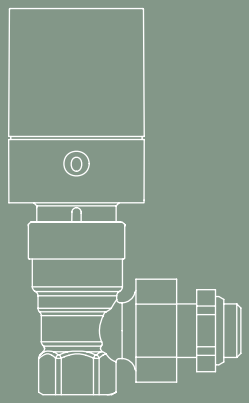

02.
ENERGY
EFFICIENCY

21. VALVES FOR RADIATOR AND TERMINAL CONTROL

21.01 VALVES FOR RADIATOR AND TERMINAL CONTROL

Thermostatic controls
Electronic programmable thermostats
Wireless programmable thermostats
Valves with thermostatic option
PICV valves with thermostatic option
Accessories
Manual valves
Lockshield regulating valves

TL1

Piero Lissoni

The first thermostatic head of Design.

TL1 is an innovative thermostatic head for radiators and decorative radiators designed by Piero Lissoni. Defined by an ergonomic, refined and gentle shape, it is an element that combines aesthetics and functionality.
The valve has been cleansed of any superstructure to enhance the purity of the cylinder: the essential becomes invisible. Experience the perfect balance of style and functionality.

Plus.

- Exclusive design by Piero Lissoni
- Comfort
- Easy installation
- High energy efficiency
- Invisible adjustment
- Eco-sustainability
- 100% plastic free packaging

Certified EN 215

Production range

THERMOSTATIC HEAD

VALVES WITH THERMOSTATIC OPTION

Angle valve for copper/polyethylene pipe

TWO TYPES OF REGLATION LOCKSHIELDS

New corner holder for copper/polyethylene pipe

Corner holder for copper/polyethylene pipe

Piero Lissoni is an architect, designer and art director and is recognised as one of the masters of contemporary design. For more than thirty years, he has been developing international projects in architecture, interior, product design and graphic design. Lissoni has received numerous awards, including the Good Design Award, the Red Dot Award and the ADI Compasso d'Oro.

rbm.eu

RBM

Series 3937

Thermostatic control for thermostatically-controlled valves. Internal sensitive element with liquid expansion.

Prearranged for temperature limitation and anti-tampering blockage.

- Max storage temperature 50 °C
- Anti-freeze triggering (*) 7 °C
- Setting field (1 ÷ 5) +10 ÷ +30 °C
- Hysteresis 0.3 °C
- Max differential pressure (in flow direction) 1 bar
- Max differential pressure (in return direction) 0.6 bar
- Thermostatic ethyl-acetate bulb liquid

CERTIFICATIONS:

TL1 by Piero Lissoni - Thermostatic head with liquid expansion sensor

Code	Model	Box	Carton	Cat.
39370000	TL1	10	100	21.01

Licensed use of trademark no. 43

Thermostatic head with liquid expansion sensor

Code	Model	Box	Carton	Cat.
40820030	TL3	10	100	21.01
40810000	TL7	10	100	21.01

Licensed use of trademark no. 43

Series 4196

Pair of temperature limiting inserts for TL1 thermostatic head.

For example to block the knob at position 3 (T=20 °C), insert the specific inserts in the two slots close to number 20 on the fixed knob.
To limit the adjustment to a greater value, move the inserts to the desired positions.

Code	Box	Carton	Cat.
41960000	1	10	21.01

Series 590.A

Thermostatic control for thermostatically-controlled valves. Internal sensitive element with liquid expansion.

Prearranged for temperature limitation and anti-tampering blockage.

- Max storage temperature 50 °C
- Anti-freeze triggering (*) 7 °C
- Setting field (1 ÷ 5) +10 ÷ +30 °C
- Hysteresis 0.3 °C
- Max differential pressure (head mounted on valve) 1 Bar
- Thermostatic ethyl-acetate bulb liquid
- Distance sensor cable length 2m (series TL 20)

CERTIFICATIONS:

Thermostatic head with liquid expansion sensor

Code	Model	Box	Carton	Cat.
05900000*	TL10	10	100	21.01
30870000**	TL10W	1	50	21.01

* Licensed use of trademark no. 43
**Reduced W value

Thermostatic head with distance sensor

Code	Model	Box	Carton	Cat.
05900010*	TL20	1	25	21.01

*Licensed use of trademark nr. 43

Liquid expansion sensor (TL10 - TL30 - TL70 - TL10W).
High energy efficiency.
Approved in Class I.

Series 209

Pair of temperature limiting inserts for RBM thermostatic head.

For example to block the knob at position 3 (T=20 °C), insert the specific inserts in the two slots close to number 20 on the fixed knob.
To limit the adjustment to a wider value, move the inserts to the desired positions.

Code	Box	Carton	Cat.
02090000	1	50	21.01

Pair of inserts already included in the supply of the RBM thermostatic head.
Inserts compatible with RBM thermostatic head model TL10 - TL30 - TL70 - TL10W - TL20.

Series 2274

Vandal proof and anti-tampering knob for thermostatic heads TL10, TL3, TL7, TL10W, TL20 (Figure 1).

Specific tool for mounting vandal proof knob (Figure 2).

Code	Figure	Box	Carton	Cat.
02274005*	1+2	6	6	21.01
02273005**	2	1	1	21.01

* A 6-knob package includes a mounting tool code 2273.005
**Tool supplied together with 12 fixing screws

Series 316

Vandal proof clamp for RBM thermostatic heads.

The RBM thermostatic heads can be equipped with a vandal proof clamp allowing it to be removed by just using the specific tool (code 2151.005).

Code	Figure	Box	Carton	Cat.
03160010	1	1	20	21.01
02151005	2	2	2	21.01
03160000	1+2	1	20	21.01

Series 2835

Thermostatic control for thermostatically-controlled valves. The remote control makes programming easier in any installation situation.

- Anti freezing protection: 8 °C
- Calibration field: (1 ÷ 5) 12 ÷ +28 °C
- Remote control cable length: 2m

Code	Box	Carton	Cat.
28350002	1	1	21.01

Liquid expansion sensor.
Remote command It makes installation procedures easier.

Series 3400

Wireless digital electronic chrono-thermostatic control with weekly programme, for valves with thermostatic option.

Designed to receive the wireless signal from the RBM range of central heating timers.

- Power supply: 2 1,5V AA type batteries (included)
- Autonomy: 2 years (low battery signal)
- Functioning: - Automatic with two temperature levels (comfort and economy) or manual by means of the select dial
- Daily switchings: 4 in comfort mode and 4 in economy mode
- Functioning temperature: 0 ÷ +50 °C
- Anti-freeze protection temperature: 6 °C
- IP30 degree of protection
- Size (lxhxp): 52x83x65 mm

CERTIFICATIONS:

FEATURES:

Code	Model	Box	Carton	Cat.
34000002	wireless	1	1	21.01

Provide for combination with the 3406 or 3405 series wireless weekly chronothermostat.
Complete supply of adapters for coupling with valves with thermostatic option of different manufacturers (Danfoss, Junkers, Honeywell etc...)

Series 3401

Flush-mounted remote actuator with wireless receiver, for thermostats and chronothermostats. 1 relay output, wall-mounted installation.

- Power supply 230Vac (-15% ÷ +10%) 50/60 Hz
- Output: bistable relay with breaking capacity of 16(8)A/250Vac
- Maximum distance from the transmitter: 30 metres in a residential home environment
- Antenna tuned to 433.92 MHz
- Operating temperature: 0 ÷ 40° C
- Storage temperature: -10°C ÷ +70° C
- Container: suitable for flush-mounted box (takes up the space of a module)
- Protection rating: IP20

CERTIFICATIONS:

FEATURES:

Code	Model	Box	Carton	Cat.
34010012	RX.16A	1	1	21.01

To be combined with 3405 and 3406 series RBM chronothermostats.

Series 3404.A

Flush-mounted remote actuator with wireless receiver, for thermostats and chronothermostats. 6 relay outputs, DIN rail installation.

- Outputs 6 relay with 5A/250V AC normally open contact for zone valve actuation
- Outputs 1 relay with 5A/250V AC normally open contact for system circulator actuation
- 230V AC 50/60Hz power supply
- connection of an external antenna (included)
- Operating frequency: 433.92 Mhz
- DIN bar installation
- Dimensions mm (lxhxd) 72x87x65

FEATURES:

Code	Model	Box	Carton	Cat.
34040002	RX7	1	1	21.01

Actuator provided with antenna.
To be combined with 3405 and 3406 series RBM chronothermostats.

Series 3463

Antenna for remote actuator.

- Cable length: 4.5 m
- Frequency range: 433.92 ±10 MHz
- Input impedance: 50 ohm

Code	Box	Carton	Cat.
34630002	1	1	21.01

21.01 RADIATOR VALVES AND LOCKSHIELDS | WIRELESS PROGRAMMABLE THERMOSTAT

Series 3406

Wireless digital weekly chronothermostat.

Combined with RBM remote actuators, it controls the ambient temperature. 3 operating modes: automatic (on 3 temperature values), manual (with manual temperature), off (with anti-freeze temperature). Programming: 7 programs for winter operation (editable) and 7 programs for summer operation (editable).

- Power supply: 1 1.5V AA battery (included)
- Autonomy: 2 years
- Charge backup: 1 minute (to change batteries)
- Differential: settable between 0.1°C and 1°C
- Temperature adjustment range: +2°C ÷ +35°
- Precision: ± 0.5°C
- Operating temperature 0 ÷ +50°C
- Size (lxhxd): 132x95x26 mm

CERTIFICATIONS:

FEATURES:

Code	Model	Box	Carton	Cat.
34060000	wireless	1	1	21.01

Installation on wall or box 503

Series 3405

Wireless digital weekly chronothermostat with built-in GSM module.

Combined with RBM remote actuators, it controls the ambient temperature. The wireless module is used to control, regardless of the temperature reading, up to 7 other remote actuators connected to the same number of electrical loads. With the built-in GSM module, the central heating timer can be remotely controlled by sending an SMS from your smartphone or using a specifically developed APP.
3 operating modes: automatic (on 3 temperature values), manual (with manual temperature), off (with anti-freeze temperature). Programming: 7 programs for winter operation (editable) and 7 programs for summer operation (editable).

- Power supply: 230V ac - 50/60 Hz
- 1 1.5V AA backup battery (included)
- Display: LCD without backlighting
- Programming: weekly
- Programming resolution: 1 hour
- Measurement resolution: 0.1 °C
- Temperature adjustment range: +2°C ÷ +50°
- Colour: White
- Size (lxhxd): 132x95x36 mm

CERTIFICATIONS:

FEATURES:

Code	Model	Box	Carton	Cat.
34050000	wireless GSM	1	1	21.01

Installation on wall or box 503.
GSM board not included in supply

RBM THERMOSTATIC VALVE WITH LOW THERMAL INERTIA

The RBM thermostatic valves and the thermostatic heads are certified in accordance with **European Standard UNI EN 215 (ED. 2007) "Thermostatic valves for radiators. Requirements and test methods".**

The Standard conformity certifications are guaranteed by the certificates granting use of trademark no. 43, issued by the certifying body.

Valvola termostatica

Detentore a regolazione micrometrica

1. **Liquid expansion thermostatic sensor**
   Higher Sensitivity.

2. **Pole with vulcanized elastomer disc**
   Elastomer directly vulcanized on the pole disc:
   - Avoids noise
   - Disc does not stick on the valve seat.

3. **RFS radiator sealing made in PTFE**
   Water sealing vs leakage is assured for a long lasting time.

4. **"Heavy" Lockshield valve**
   Micrometric setting! Perfect for balancing.
   KVS values (min. 9 values) can be set through the hand wheel on the top.

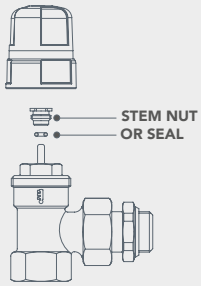

Possibility of maintenance service while system is in operation.

TELL
Thermostatic Efficiency Label

Termostatic Valve RBM High Energy Efficiency: Class I approved!

028

SIET sperimentiamo le tue idee

The valves' certification in accordance with Standard UNI EN 215, is the RBM thermostatic valve and head combination.

21.01 RADIATOR VALVES AND LOCKSHIELDS | VALVES WITH THERMOSTATIC OPTION

Series 31

Thermostatic angle valve for iron pipe, complying with UNI-EN 215 standard. With RFS.

Nickel-plated brass body.
Double seal obturator.
Elastomer seals.
Shockproof ABS handwheel.
Threaded angled connection F UNI-EN-ISO 228 for iron pipe.
Connection to terminal through threaded M RFS (UNI-EN-ISO 228) with PTFE pre-gasket ogive (only for 3/8" and 1/2" diameters).

- Max operating temperature 110 °C
- Max operating pressure 10 Bar

CERTIFICATIONS:

BIM

Code	Size	Kv (m³/h)	Box	Carton	Cat.
00310300	G 3/8"	2,45	10	100	21.01
00310400	G 1/2"	2,45	10	100	21.01
00310500	G 3/4"	-	10	60	21.01

Licensed use of trademark no. 43 (3/8" - 1/2")

For perfect alignment, pair the valve size 3/4" and 1" with the lockshield series 9 (see page 275).

Series 32

Straight valve with thermostatic option for iron pipe, complying with standard UNI-EN 215.

Nickel-plated brass body.
Double seal obturator.
Elastomer seals.
Shockproof ABS handwheel.
Threaded straight connection F UNI-EN-ISO 228 for iron pipe.
Connection to terminal through threaded M RFS (UNI-EN-ISO 228) with PTFE pre-gasket ogive (only for 3/8" and 1/2" diameters).

- Max operating temperature 110 °C
- Max operating pressure 10 Bar

CERTIFICATIONS:

BIM

Code	Size	Kv (m³/h)	Box	Carton	Cat.
00320300*	G 3/8"	1,60	10	100	21.01
00320400*	G 1/2"	1,60	10	100	21.01
00320500	G 3/4"	-	10	50	21.01

* with RFS
Licensed use of trademark no. 43 (3/8" - 1/2")

For perfect alignment, pair the valve size 3/4" and 1" with the lockshield series 10 (see page 275).

21.01 RADIATOR VALVES AND LOCKSHIELDS | VALVES WITH THERMOSTATIC OPTION

Series 48

Thermostatic angle valve for copper or polyethylene pipe, complying with UNI-EN 215. With RFS.

Nickel-plated brass body.
Double seal obturator.
Elastomer seals.
Shockproof ABS handwheel.
RBM standard threaded angled M connection, for copper, polyethylene and multilayer pipe fittings.
Connection to terminal through threaded M RFS (UNI-EN-ISO 228) with PTFE pre-gasket ogive.

- Max operating temperature 110 °C
- Max operating pressure 10 Bar

CERTIFICATIONS:

BIM

Code	Size	Kv (m³/h)	Box	Carton	Cat.
00480300	G 3/8"	2,45	10	100	21.01
00480400	G 1/2"	2,45	10	100	21.01

Licensed use of trademark no. 43

Use fittings with RBM Standard thread for pipe connection.

Series 49

Straight thermostat valve for copper or polyethylene pipe, conforming to UNI-EN 215. With RFS.

Nickel-plated brass body.
Double seal obturator.
Elastomer seals.
Shockproof ABS handwheel.
RBM standard threaded straight M connection for copper, polyethylene and multilayer pipe fittings.
Connection to terminal through threaded M RFS (UNI-EN-ISO 228) with PTFE pre-gasket ogive.

- Max operating temperature 110 °C
- Max operating pressure 10 Bar

CERTIFICATIONS:

Code	Size	Kv (m³/h)	Box	Carton	Cat.
00490300	G 3/8"	1,60	10	100	21.01
00490400	G 1/2"	1,60	10	100	21.01

Licensed use of trademark no. 43

Use fittings with RBM Standard thread for pipe connection.

Series 179

Reverse thermostat valve for iron pipe. With RFS.

Nickel-plated brass body.
Double seal obturator.
Elastomer seals.
Shockproof ABS handwheel.
Threaded angled connection F UNI-EN-ISO 228 for iron pipe.
Connection to terminal through threaded M RFS (UNI-EN-ISO 228) with PTFE pre-gasket ogive.

- Max operating temperature 110 °C
- Max operating pressure 10 Bar

CERTIFICATIONS:

Code	Size	Kv (m³/h)	Box	Carton	Cat.
01790300	G 3/8"	0,99	10	100	21.01
01790400	G 1/2"	0,99	10	100	21.01

21.01 RADIATOR VALVES AND LOCKSHIELDS | VALVES WITH THERMOSTATIC OPTION

Series 180

Reverse thermostatic valve for copper or polyethylene pipe. With RFS.

Nickel-plated brass body.
Double seal obturator.
Elastomer seals.
Shockproof ABS handwheel.
RBM standard threaded straight M connection for copper, polyethylene and multilayer pipe fittings.
Connection to terminal through threaded M RFS (UNI-EN-ISO 228) with PTFE pre-gasket ogive.

- Max operating temperature 110 °C
- Max operating pressure 10 Bar

CERTIFICATIONS:

Code	Size	Kv (m³/h)	Box	Carton	Cat.
01800300	G 3/8"	0,99	10	100	21.01
01800400	G 1/2"	0,99	10	100	21.01

Use fittings with RBM Standard thread for pipe connection.

Series 395

Thermostatizable angle valve for iron pipe with reversible connections and orthogonal control. With RFS.

Nickel-plated brass body.
Double seal obturator.
Elastomer seals.
Shockproof ABS handwheel.
Straight threaded connections F UNI-EN-ISO 228 for iron pipe, reversible.
Connection to terminal through threaded M RFS (UNI-EN-ISO 228) with PTFE pre-gasket ogive.

- Max operating temperature 110 °C
- Max operating pressure 10 Bar

Code	Size	Kv (m³/h)	Box	Carton	Cat.
03950300	G 3/8"	1,55	10	100	21.01
03950400	G 1/2"	1,60	10	100	21.01

* with RFS

System side reversible connections with closing cap of unused way.

To turn the valves for iron pipes into valves for copper or polyethylene pipes, provide for the adapter fitting code 83.0X.00 (see page 113).

Series 4250

Jet-Line Series: thermostatic kit with thermostatic angle valve for iron pipe, compliant with standard UNI-EN 215 and angle lockshield valve for iron pipe.

Nickel-plated brass body.
Double seal obturator.
Elastomer seals.
Shockproof ABS handwheel.
TL3 thermostatic control with liquid expansion, featuring an integrated sensor.
Threaded angled connection F UNI-EN-ISO 228 for iron pipe.
Connection to threaded terminal M UNI-EN-ISO 228.

- Max operating temperature 110 °C
- Max operating pressure 10 Bar

Code	Size	Box	Cat.
42500300	3/8"	10	21.01
42500400	1/2"	10	21.01

* Licensed use of trademark no. 43

Supplied with:
valve with thermostatic option;
liquid expansion thermostatic head;
lockshield valve.
Kit components supplied in separate packages.

Series 4251

Jet-Line Series: thermostatic kit with thermostatic straight valve for iron pipe, compliant with standard UNI-EN 215 and straight lockshield valve for iron pipe.

Nickel-plated brass body.
Double seal obturator.
Elastomer seals.
Shockproof ABS handwheel.
TL3 thermostatic control with liquid expansion, featuring an integrated sensor.
Threaded straight connection F UNI-EN-ISO 228 for iron pipe.
Connection to threaded terminal M UNI-EN-ISO 228.

- Max operating temperature 110 °C
- Max operating pressure 10 Bar

Code	Size	Box	Cat.
42510300	3/8"	10	21.01
42510400	1/2"	10	21.01

* Licensed use of trademark no. 43

Supplied with:
valve with thermostatic option;
liquid expansion thermostatic head;
lockshield valve.
Kit components supplied in separate packages.

21.01 RADIATOR VALVES AND LOCKSHIELDS | VALVES WITH THERMOSTATIC OPTION

Series 2080

Jet-Line Series: thermostatic option kit with thermostatic option angle valve for iron pipe, compliant with standard UNI-EN 215 and angle lockshield valve for iron pipe.

Nickel-plated brass body.
Double seal obturator.
Elastomer seals.
Shockproof ABS handwheel.
Threaded angled connection F UNI-EN-ISO 228 for iron pipe.
Connection to threaded terminal M UNI-EN-ISO 228.

- Max operating temperature 110 °C
- Max operating pressure 10 Bar

Code	Size	Box	Carton	Cat.
20800300	3/8"	10	100	21.01
20800400	1/2"	10	100	21.01

* Licensed use of trademark no. 43

Supplied with:
valve with thermostatic option;
lockshield valve.
Kit components supplied in separate packages.

Series 2081

Jet-Line Series: thermostatic option kit with thermostatic option straight valve for iron pipe, compliant with standard UNI-EN 215 and straight lockshield valve for iron pipe.

Nickel-plated brass body.
Double seal obturator.
Elastomer seals.
Shockproof ABS handwheel.
Threaded straight connection F UNI-EN-ISO 228 for iron pipe.
Connection to threaded terminal M UNI-EN-ISO 228.

- Max operating temperature 110 °C
- Max operating pressure 10 Bar

Code	Size	Box	Carton	Cat.
20810300	3/8"	10	100	21.01
20810400	1/2"	10	100	21.01

* Licensed use of trademark no. 43

Supplied with:
valve with thermostatic option;
lockshield valve.
Kit components supplied in separate packages.

Series 4248

Jet-Line Series: thermostatic kit with thermostatic angle valve for copper or polyethylene pipe, compliant with standard UNI-EN 215 and angle lockshield valve for copper or polyethylene pipe.

Nickel-plated brass body.
Double seal obturator.
Shockproof ABS handwheel.
Elastomer seals.
TL3 thermostatic control with liquid expansion, featuring an integrated sensor.
Threaded angled M standard RBM connection for copper, polyethylene, multilayer pipe fittings.
Connection to threaded terminal M UNI-EN-ISO 228.

- Max operating temperature 110 °C
- Max operating pressure 10 Bar

Code	Size	Box	Cat.
42480300	RBM 3/8"	10	21.01
42480400	RBM 1/2"	10	21.01

* Licensed use of trademark no. 43
System side standard RBM thread W 24.5x19F

Supplied with:
valve with thermostatic option;
liquid expansion thermostatic head;
lockshield valve.
Use fittings with RBM Standard thread for pipe connection.
Kit components supplied in separate packages.

Series 4249

Jet-Line Series: thermostatic kit with thermostatic straight valve for copper or polyethylene pipe, compliant with standard UNI-EN 215 and straight lockshield valve for copper or polyethylene pipe.

Nickel-plated brass body.
Double seal obturator.
Shockproof ABS handwheel.
Elastomer seals.
TL3 thermostatic control with liquid expansion, featuring an integrated sensor.
Threaded straight M standard RBM connection for copper, polyethylene, multi-layer pipe fittings.
Connection to threaded terminal M UNI-EN-ISO 228.

- Max operating temperature 110 °C
- Max operating pressure 10 Bar

Code	Size	Box	Cat.
42490300	RBM 3/8"	10	21.01
42490400	RBM 1/2"	1	21.01

* Licensed use of trademark no. 43
System side standard RBM thread W 24.5x19F

Supplied with:
valve with thermostatic option;
liquid expansion thermostatic head;
lockshield valve.
Use fittings with RBM Standard thread for pipe connection.
Kit components supplied in separate packages.

Series 1344

Jet-Line Series: thermostatic option kit with thermostatic option angle valve for copper or polyethylene pipe, compliant with standard UNI-EN 215 and angle lockshield valve for copper or polyethylene pipe.

Nickel-plated brass body.
Double seal obturator.
Shockproof ABS handwheel.
Elastomer seals.
Threaded angled M standard RBM connection for copper, polyethylene, multilayer pipe fittings.
Connection to threaded terminal M UNI-EN-ISO 228.

- Max operating temperature 110 °C
- Max operating pressure 10 Bar

Code	Size	Box	Carton	Cat.
13440300	RBM 3/8"	10	100	21.01
13440400	RBM 1/2"	10	100	21.01

* Licensed use of trademark no. 43
System side standard RBM thread W 24.5x19F

Supplied with:
valve with thermostatic option;
lockshield valve.
Use fittings with RBM Standard thread for pipe connection.
Kit components supplied in separate packages.

Series 1345

Jet-Line Series: thermostatic option kit with thermostatic option straight valve for copper or polyethylene pipe, compliant with standard UNI-EN 215 and straight lockshield valve for copper or polyethylene pipe.

Nickel-plated brass body.
Double seal obturator.
Shockproof ABS handwheel.
Elastomer seals.
RBM standard threaded straight M connection for copper, polyethylene and multilayer pipe fittings.
Connection to threaded terminal M UNI-EN-ISO 228.

- Max operating temperature 110 °C
- Max operating pressure 10 Bar

Code	Size	Box	Carton	Cat.
13450300	RBM 3/8"	10	100	21.01
13450400	RBM 1/2"	10	100	21.01

* Licensed use of trademark no. 43
System side standard RBM thread W 24.5x19F

Supplied with:
valve with thermostatic option;
lockshield valve.
Use fittings with RBM Standard thread for pipe connection.
Kit components supplied in separate packages.

Series 2640

Angle radiator valve for iron pipe with thermostatic option and pre-setting.

Nickel-plated brass body.
Double seal obturator.
Elastomer seals.
Shockproof ABS handwheel.
Threaded angled connection F UNI-EN-ISO 228 for iron pipe.
Connection to threaded terminal M UNI-EN-ISO 228.

- Max operating temperature 110 °C
- Max operating pressure 10 Bar

CERTIFICATIONS:

Code	Size	Box	Carton	Cat.
26400390	G 3/8"	10	100	21.01
26400490	G 1/2"	10	100	21.01
26400590	G 3/4"	10	60	21.01
26400690	G 1"	5	20	21.01

Licensed use of trademark no. 43 (3/8" - 1/2")

Valve with thermostatic option and pre-setting.
Use spanner code 2878.00.00 (see page 155) to adjust Kvs values.

Series 2641

Straight radiator valve for iron pipe with thermostatic option and pre-setting.

Nickel-plated brass body.
Double seal obturator.
Elastomer seals.
Shockproof ABS handwheel.
Threaded straight connection F UNI-EN-ISO 228 for iron pipe.
Connection to threaded terminal M UNI-EN-ISO 228.

- Max operating temperature 110 °C
- Max operating pressure 10 Bar

CERTIFICATIONS:

Code	Size	Box	Carton	Cat.
26410390	G 3/8"	10	100	21.01
26410490	G 1/2"	10	100	21.01
26410590	G 3/4"	10	50	21.01
26410690	G 1"	5	20	21.01

Licensed use of trademark no. 43 (3/8" - 1/2")

Valve with thermostatic option and pre-setting.
Use spanner code 2878.00.00 (see page 155) to adjust Kvs values.

Series 2642

Angle radiator valve for copper and polyethylene pipe with thermostatic option and pre-setting.

Nickel-plated brass body.
Double seal obturator.
Elastomer seals.
Shockproof ABS handwheel.
Threaded angled M standard RBM connection for copper, polyethylene, multilayer pipe fittings.
Connection to threaded terminal M UNI-EN-ISO 228.

- Max operating temperature 110 °C
- Max operating pressure 10 Bar

CERTIFICATIONS:

Code	Size	Box	Carton	Cat.
26420390	G 3/8"	10	100	21.01
26420490	G 1/2"	10	100	21.01

Licensed use of trademark no. 43

Valve with thermostatic option and pre-setting.
Use fittings with RBM Standard thread for pipe connection.
Use spanner code 2878.00.00 (see page 155) to adjust Kvs values.

Series 2643

Straight radiator valve for copper and polyethylene pipe with thermostatic option and pre-setting.

Nickel-plated brass body.
Double seal obturator.
Elastomer seals.
Shockproof ABS handwheel.
Threaded straight M standard RBM connection for copper, polyethylene, multi-layer pipe fittings.
Connection to threaded terminal M UNI-EN-ISO 228.

- Max operating temperature 110 °C
- Max operating pressure 10 Bar

CERTIFICATIONS:

Code	Size	Box	Carton	Cat.
26430390	G 3/8"	10	100	21.01
26430490	G 1/2"	10	100	21.01

Licensed use of trademark no. 43

Valve with thermostatic option and pre-setting.
Use fittings with RBM Standard thread for pipe connection.
Use spanner code 2878.00.00 (see page 155) to adjust Kvs values.

Series 2720

Radiator reversible valve for iron pipe with thermostatic option and pre-setting.

Nickel-plated brass body.
Double seal obturator.
Elastomer seals.
Shockproof ABS handwheel.
Straight threaded connections F UNI-EN-ISO 228 for iron pipe, reversible.
Connection to threaded terminal M UNI-EN-ISO 228.

- Max operating temperature 110 °C
- Max operating pressure 10 Bar

Code	Size	Box	Carton	Cat.
27200390	G 3/8"	10	10	21.01
27200490	G 1/2"	10	10	21.01

Valve with thermostatic option and pre-setting.
System side reversible connections with closing cap of unused way.
Use spanner code 2878.00.00 (see page 155) to adjust Kvs values.
To turn the valves for iron pipes into valves for copper or polyethylene pipes, provide for the adapter fitting code 83.0X.00 (see page 113)

Series 1028

4-way valve with thermostatic option for single pipe circuits.

Nickel-plated brass body.
Built-in micrometric lockshield valve.
Elastomer seals.
Shockproof ABS cap and handwheel.
Polymer probe.
In-line connections, centre distance 37 mm M standard RBM thread for copper, polyethylene and multilayer pipe fittings.
Threaded radiator connection M UNI-EN-ISO 228.

- Max operating temperature 110 °C
- Max operating pressure 10 Bar
- Probe length 295 mm
- 1/2" probe outside diameter 10 mm
- 3/4" probe outside diameter 13 mm

Code	Size	Box	Carton	Cat.
10280400	G 1/2"	4	16	21.01
10280500	G 3/4"	4	16	21.01

Use fittings with RBM Standard thread for pipe connection.

THERMOSTATIC VALVE WITH PRE-SETTING

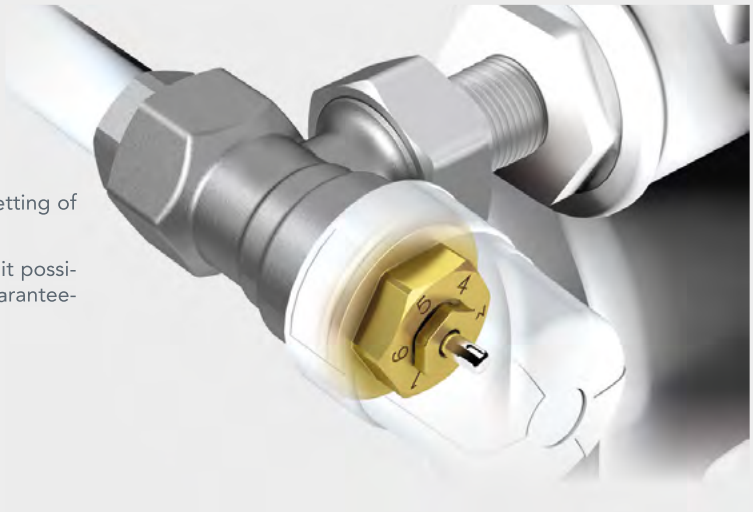

Thanks to a special internal device they allow the pre-setting of the head loss quickly and effectively.

The use in combination with thermostatic heads makes it possible to keep the ambient temperature constant, thus guaranteeing an effective energy saving.

1 Micrometric setting
KVS values can be set through the pole on the top of the cap unit, simply using the adjustment tool.
6 Kvs values for pre-setting

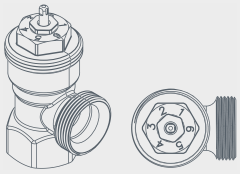

2 Pole with vulcanized elastomer disc
Elastomer directly vulcanized on the pole disc:
- Avoids noise
- Disc does not stick on the valve seat

3 Adjustment tool

4 Cap unit for pre-setting

LIQUID EXPANSION THERMOSTATIC SENSOR. HIGHER SENSITIVITY!

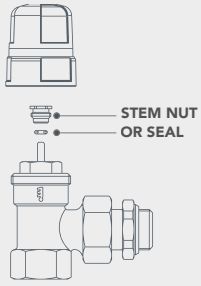

Possibility of maintenance service while system is in operation.

Series 3101

4-way thermostat valve with variable spacing with or without presetting, for single-pipe systems.

Nickel-plated brass body.
Built-in micrometric lockshield valve.
Elastomer seals.
Shockproof ABS cap and handwheel.
Polymer probe.
In-line connections, variable centre distance 35 ÷ 40 mm M standard RBM thread for copper, polyethylene and multilayer pipe fittings.
Threaded radiator connection M UNI-EN-ISO 228.

- Max operating temperature 110 °C
- Max operating pressure 10 Bar
- Probe length 110/300 mm
- Probe outside diameter 11 mm

Variable spacing thermostatable 4-way valve without presetting for single-pipe systems

Code	Size	Box	Carton	Cat.
31010400	G 1/2"	4	16	21.01
31010500	G 3/4"	4	16	21.01
31010600	G 1"	4	16	21.01

Variable spacing thermostatically controllable 4-way valve with presetting for single-pipe systems

Code	Size	Box	Carton	Cat.
31010410	G 1/2"	4	16	21.01
31010510	G 3/4"	4	16	21.01
31010610	G 1"	4	16	21.01

Valve with thermostatic option and pre-setting.

Use fittings with RBM Standard thread for pipe connection.
Use spanner code 2878.00.00 (see page 155) to adjust Kvs values.

Series 754

Single-pipe/4-way thermostatable valve for bathroom fixture terminals. With RFS.

Nickel-plated brass body.
Elastomer seals.
Shockproof ABS cap and handwheel.
Brass probe.
Built-in micrometric lockshield valve.
Suitable for single pipe and dual pipe systems.
In-line connections, centre distance 37 mm M standard RBM thread for copper, polyethylene and multilayer pipe fittings.
Threaded connections to radiator M UNI-EN-ISO 228 with pre-gasket ogive in PTFE.

- Max operating temperature 110 °C
- Max operating pressure 10 Bar
- Kv mod. with thermostatic option 1.80 m³/h
- Kv mod. thermostatic 1.44 m³/h
- Probe length 300 mm
- Probe outside diameter. 10 mm
- Flow rate at radiator Adjustable bypass

Code	Size	Box	Carton	Cat.
07540400	G 1/2"	4	16	21.01

For connection to radiators.
Use fittings with RBM Standard thread for pipe connection.

Series 223

Kit for heating units that can be fed from single-pipe and two-pipe systems. With RFS.

Nickel-plated brass body.
Elastomer seals.
Shockproof ABS cap and handwheel.
Built-in micrometric lockshield valve.
Internal bypass with 50% bore only for single pipe applications.
In-line connections, centre distance 37 mm M standard RBM thread for copper, polyethylene and multilayer pipe fittings.
Connections for external probe Ø 15 mm.
Threaded connections to terminal M UNI-EN-ISO 228 with pre-gasket ogive in PTFE.

- Max operating temperature 110 °C
- Max operating pressure 10 Bar
- Probe not included.

Kit composed of:
- diverter
- 1/2" thermostat valve

Code	Size	Model	Box	Carton	Cat.
02230450	G 1/2"	Kit 50% *	1	10	21.01
02230400	G 1/2"	Kit 100% **	1	10	21.01

* Single pipe circuits
**Double pipe circuits

Floor or baseboard distribution in-line power supply connections.
Use fittings with RBM Standard thread for pipe connection.

Series 225

Kit for heating units that can be fed from single-pipe and two-pipe systems. With RFS.

Nickel-plated brass body.
Elastomer seals.
Shockproof ABS cap and handwheel.
Built-in micrometric lockshield valve.
Internal bypass with 50% bore only for single pipe applications.
In-line connections, centre distance 37 mm M standard RBM thread for copper, polyethylene and multilayer pipe fittings.
Connections for external probe Ø 15 mm.
Threaded connections to terminal M UNI-EN-ISO 228 with pre-gasket ogive in PTFE.

- Max operating temperature 110 °C
- Max operating pressure 10 Bar
- Probe not included.

Kit composed of:
- diverter
- 1/2" reverse thermostatic valve

Code	Size	Model	Box	Carton	Cat.
02250450	G 1/2"	Kit - - -50% *	1	10	21.01
02250400	G 1/2"	Kit - - -100% **	1	10	21.01

* Single pipe circuits
**Double pipe circuits

Floor or baseboard distribution in-line power supply connections.
Use fittings with RBM Standard thread for pipe connection.

21.01 RADIATOR VALVES AND LOCKSHIELDS | VALVES WITH THERMOSTATIC OPTION

Series 211

Kit for heating units that can be fed from single-pipe and two-pipe systems. With RFS.

Nickel-plated brass body.
Elastomer seals.
Shockproof ABS cap and handwheel.
Built-in micrometric lockshield valve.
Internal bypass with 50% bore only for single pipe applications.
Angle connections, centre distance 37 mm M standard RBM thread for copper, polyethylene and multilayer pipe fittings.
Connections for external probe Ø 15 mm.
Threaded connections to terminal M UNI-EN-ISO 228 with pre-gasket ogive in PTFE.

- Max operating temperature 110 °C
- Max operating pressure 10 Bar
- Probe not included.

Code	Size	Model	Box	Carton	Cat.
02110450	G 1/2"	Kit - - -50% *	1	10	21.01
02110400	G 1/2"	Kit - - -100% **	1	10	21.01

Angle connections fed from wall.
Use fittings with RBM Standard thread for pipe connection.

Series 213

Kit for heating units that can be fed from single-pipe and two-pipe systems. With RFS.

Nickel-plated brass body.
Elastomer seals.
Shockproof ABS cap and handwheel.
Built-in micrometric lockshield valve.
Internal bypass with 50% bore only for single pipe applications.
Angle connections, centre distance 37 mm M standard RBM thread for copper, polyethylene and multilayer pipe fittings.
Connections for external probe Ø 15 mm.
Threaded connections to terminal M UNI-EN-ISO 228 with pre-gasket ogive in PTFE.

- Max operating temperature 110 °C
- Max operating pressure 10 Bar
- Probe not included.

Kit composed of:
- angle diverter valve
- 1/2" reverse thermostatic valve

Code	Size	Model	Box	Carton	Cat.
02130450	G 1/2"	Kit - - -50% *	1	10	21.01
02130400	G 1/2"	Kit - - -100% **	1	10	21.01

Angle connections fed from wall.
Use fittings with RBM Standard thread for pipe connection.

Series 3563

Angle valve with thermostatic option with pre-setting independent from pressure for iron pipe.

Nickel-plated brass body.
Double seal obturator.
Elastomer seals.
Shockproof ABS handwheel.
Threaded angled connection F UNI-EN-ISO 228 for iron pipe.
Connection to threaded terminal M UNI-EN-ISO 228.

- Max operating temperature 110 °C
- Max operating pressure 10 Bar

Code	Size	Box	Carton	Cat.
35630390	G 3/8"	7	28	21.01
35630490	G 1/2"	7	28	21.01

Valve with thermostatic option and pre-setting.
Use spanner code 2878.00.00 (see page 155) to adjust Kvs values.

Series 3564

Straight valve with thermostatic option with pre-setting independent from pressure for iron pipe.

Nickel-plated brass body.
Double seal obturator.
Elastomer seals.
Shockproof ABS handwheel.
Threaded straight connection F UNI-EN-ISO 228 for iron pipe.
Connection to threaded terminal M UNI-EN-ISO 228.

- Max operating temperature 110 °C
- Max operating pressure 10 Bar

Code	Size	Box	Carton	Cat.
35640390	G 3/8"	7	28	21.01
35640490	G 1/2"	7	28	21.01

Valve with thermostatic option and pre-setting.
Use spanner code 2878.00.00 (see page 155) to adjust Kvs values.

Series 3924

Thermostatically controlled corner valve with pre-setting independent from pressure for copper pipe.

Nickel-plated brass body.
Double seal obturator.
Elastomer seals.
Shockproof ABS handwheel.
Threaded angled connection F UNI-EN-ISO 228 for iron pipe.
Connection to threaded terminal M UNI-EN-ISO 228.

- Max operating temperature 110 °C
- Max operating pressure 10 Bar

Code	Size	Box	Carton	Cat.
39240390	G 3/8"	7	28	21.01
39240490	G 1/2"	7	28	21.01

Valve with thermostatic option and pre-setting.
Use spanner code 2878.00.00 (see page 155) to adjust Kvs values.

21.01 RADIATOR VALVES AND LOCKSHIELDS | PICV VALVES WITH THERMOSTATIC OPTION

Series 3925

Thermostatically controlled straight valve with pre-setting independent from pressure for copper pipe.

Nickel-plated brass body.
Double seal obturator.
Elastomer seals.
Shockproof ABS handwheel.
Threaded angled connection F UNI-EN-ISO 228 for iron pipe.
Connection to threaded terminal M UNI-EN-ISO 228.

- Max operating temperature 110 °C
- Max operating pressure 10 Bar

Code	Size	Box	Carton	Cat.
39250390	G 3/8"	7	28	21.01
39250490	G 1/2"	7	28	21.01

Valve with thermostatic option and pre-setting.
Use spanner code 2878.00.00 (see page 155) to adjust Kvs values.

THERMOSTATIC VALVE WITH PRE-SETTING INDEPENDENT FROM PRESSURE

The **thermostatic valve with pre-setting independent** from pressure is a radiator valve that performs the functions of a thermostatic valve and a differential pressure regulator. Designed for temperature control and hydraulic balancing in a single product, it is applied in double-pipe heating systems.

The ring nut for the flow rate pre-setting limits the maximum flow passing through the radiator and thereby ensures quick and effective circuit balancing. The differential pressure regulator – the nerve centre of the valve – resets pressure variations in a heating system, thus ensuring the preset flow rate.

When used in conjunction with the **RBM thermostatic head**, it maintains a constant temperature in the environment, ensuring energy savings.

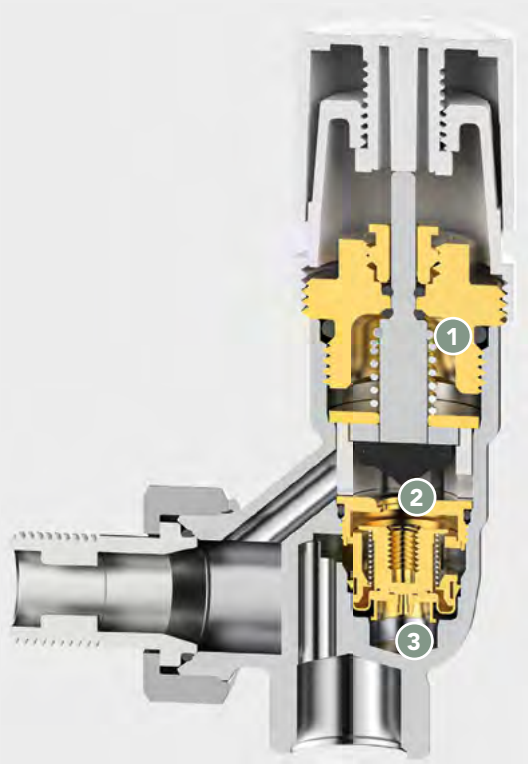

1 Micrometric setting
KVS values can be set through the pole on the top of the cap unit, simply using the adjustment tool.
6 Kvs values for pre-setting!

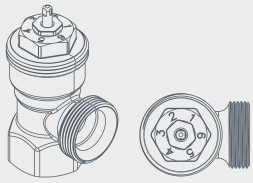

2 Pole with vulcanized elastomer disc.
Elastomer directly vulcanized on the pole disc:
- Avoids noise
- Disc does not stick on the valve seat

3 Differential pressure regulator (ΔP)
Resets pressure variations in systems.

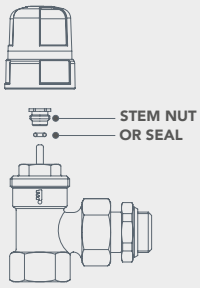

Possibility of maintenance service while system is in operation.

Series 177

Elbow fitting for valve-pipe connection.

Nickel-plated brass body.
Elastomer seals.
Threaded pipe connection M standard RBM for copper, polyethylene and multilayer pipe fittings.
Connection to valve with RBM standard F threaded fitting

- Max operating temperature 110 °C
- Max operating pressure 10 Bar

Code	Figure	Centre distance (mm)	Box	Carton	Cat.
01770000	2	32	20	20	21.01
01770010	1	60	20	20	21.01

For distribution outside of baseboard.
Valve-pipe connection.
Use fittings with RBM Standard thread for pipe connection.

Series 308.A

Single hole plastic openable washer.

Application flush with the wall for aesthetic closure of pipe passage hole.

- Washer outside diameter 60 mm

Code	Size	Box	Carton	Cat.
03081002	Ø 10	100	100	21.01
03081202	Ø 12	100	100	21.01
03081402	Ø 14	100	100	21.01
03081602	Ø 16	100	100	21.01
03081802	Ø 18	100	100	21.01
03080012	U	100	100	21.01

U = Universal

Series 308.B

Double hole plastic openable washer.

Application flush with the wall for aesthetic closure of pipe passage hole.

- External dimensions 98x48 mm
- Hole centre distance 37 mm

Code	Size	Centre distance (mm)	Box	Carton	Cat.
03080002	U	37	50	50	21.01

U = Universal

Suitable for all Single flow and Double flow centre distance 37 mm valves.

Series 175

Nickel plated brass elbow fitting.

- Threaded F standard RBM connection for RBM valves.
- Threaded M connection (UNI-EN-ISO 228) with PTFE pre-gasket ogive.

Code	Size	Box	Carton	Cat.
01750400	RFS 1/2"	20	20	21.01

Series 310

Chrome plated steel probe with end not countersunk.

- Max operating temperature 110 °C
- Max operating pressure 10 Bar

Code	ØxL (mm)	Suitable for valve	Box	Carton	Cat.
03101060	Ø 10 x 600	Uniflux E.P.	1	10	21.01
03101090	Ø 10 x 900	Uniflux E.P.	1	10	21.01
03101010	Ø 10 x 1000	Uniflux E.P.	1	10	21.01

Series 348

Chrome plated steel probe with end not countersunk.

- Max operating temperature 110 °C
- Max operating pressure 10 Bar

Code	ØxL (mm)	Suitable for valve	Box	Carton	Cat.
03481560	Ø 15 x 600	Uniflux E.P. kit	35	35	21.01
03481590	Ø 15 x 900	Uniflux E.P. kit	35	35	21.01
03481510	Ø 15 x 1000	Uniflux E.P. kit	35	35	21.01

Series 312

Brass steel probe with countersunk end.

- Max operating temperature 110 °C
- Max operating pressure 10 Bar

Code	ØxL (mm)	Suitable for valve	Box	Carton	Cat.
03121560 *	Ø 15 x 600	Single flow	1	10	21.01
03121590 **	Ø 15 x 900	Single flow	1	10	21.01

*non-chrome-plated brass probe
**chrome-plated brass probe

Suitable for 25 series valve.

Series 1138

Insulation shell made of expanded polyethylene half-bearings with external antiscratch coating.

Half-bearings fixed with double-sided adhesive tape already applied.

- Fire behaviour class1
- Density 33 kg/m³
- Max operating temperature -40 ÷ +90 °C

Angle valve thermal shell

Code	Size	Box	Carton	Cat.
11380020	3/4"	10	10	21.01

Insulation shell for angle lockshields

Code	Size	Box	Carton	Cat.
11380030	3/4"	10	10	21.01

Series 349

Pair of brass reducing couplings for connecting to radiant plates with F 1/2" connections. Accessories for double- and single-pipe valves.

Brass body.
Elastomer seals.
Euroconus M G3/4" x M 1/2" threaded connections
UNI EN ISO228
Valve-connection centre distance 50mm.

- Max operating temperature 110 °C
- Max operating pressure 10 bar

Code	Size A	Size B	Box	Carton	Cat.
03490000	3/4"	1/2"	1	125	21.01

Tapered seal fitting which can be coupled to radiant plate valves series 301.

Series 7

Manual simple angle diverter valve for iron pipe. With RFS.

Nickel-plated brass body.
Elastomer seals.
Shockproof ABS handwheel.
Threaded angled connection F UNI-EN-ISO 228 for iron pipe.
Connection to terminal through threaded M RFS (UNI-EN-ISO 228) with PTFE pre-gasket ogive (only for 3/8" and 1/2" diameters).

- Max operating temperature 110 °C
- Max operating pressure 10 Bar

Code	Size	Kv (m³/h)	Box	Carton	Cat.
00070300	G 3/8"	3,2	10	100	21.01
00070400	G 1/2"	4,0	10	100	21.01
00070500	G 3/4"	10,8	10	60	21.01
00070600	G 1"	17,1	6	6	21.01
00070700	G 1"1/4	22,5	4	4	21.01

Series 8

Straight single adjustment manual valve for iron pipe. With RFS.

Nickel-plated brass body.
Elastomer seals.
Shockproof ABS handwheel.
Threaded straight connection F UNI-EN-ISO 228 for iron pipe.
Connection to terminal through threaded M RFS (UNI-EN-ISO 228) with PTFE pre-gasket ogive (only for 3/8" and 1/2" diameters).

- Max operating temperature 110 °C
- Max operating pressure 10 Bar

Code	Size	Kv (m³/h)	Box	Carton	Cat.
00080300	G 3/8"	1,4	10	100	21.01
00080400	G 1/2"	1,8	10	100	21.01
00080500	G 3/4"	5,2	10	50	21.01
00080600	G 1"	8,2	6	6	21.01
00080700	G 1"1/4	22,5	4	4	21.01

Series 27

Manual single angle adjustment valve for copper or polyethylene pipe. With RFS.

Nickel-plated brass body.
Elastomer seals.
Shockproof ABS handwheel.
Threaded angled M standard RBM connection for copper, polyethylene, multilayer pipe fittings.
Connection to threaded terminal M UNI-EN-ISO 228 with pre-gasket ogive in PTFE.

- Max operating temperature 110 °C
- Max operating pressure 10 Bar

Code	Size	Kv (m³/h)	Box	Carton	Cat.
00270300	G 3/8"	3,2	10	100	21.01
00270310	G 3/8"- Ø 18 (*)	3,2	10	10	21.01
00270400	G 1/2"	4,0	10	100	21.01
00270410	G 1/2"- Ø 18 (*)	4,0	10	10	21.01

(*): Can be fed by Ø18 copper pipes (kit valve + reduction code 57.18.00)

Use fittings with RBM Standard thread for pipe connection.

Series 28

Straight single adjustment manual valve for copper or polyethylene pipe. With RFS.

Nickel-plated brass body.
Elastomer seals.
Shockproof ABS handwheel.
Threaded straight M standard RBM connection for copper, polyethylene, multi-layer pipe fittings.
Connection to threaded terminal M UNI-EN-ISO 228 with pre-gasket ogive in PTFE.

- Max operating temperature 110 °C
- Max operating pressure 10 Bar

Code	Size	Kv (m³/h)	Box	Carton	Cat.
00280300	G 3/8"	1,4	10	100	21.01
00280310	G 3/8"- Ø 18 (*)	1,4	10	10	21.01
00280400	G 1/2"	1,8	10	100	21.01
00280410	G 1/2"- Ø 18 (*)	1,8	10	10	21.01

(*): Can be fed by Ø18 copper pipes (kit valve + reduction code 57.18.00)

Use fittings with RBM Standard thread for pipe connection.

Series 151

Jet-Line Series: angle lockshield valve with double seal O-ring for iron pipe.

Nickel-plated brass body.
Elastomer seals.
Shockproof ABS handwheel.
Threaded angled connection F UNI-EN-ISO 228 for iron pipe fittings.
Connection to threaded terminal M UNI-EN-ISO 228 (with pre-gasket ogive in PTFE series *).

- Max operating temperature 110 °C
- Max operating pressure 10 Bar

CERTIFICATIONS:

Double seal O.R. angle valve for iron pipe - RFS seal on radiator*

Code	Size	Box	Carton	Cat.
01510300	RFS 3/8"	10	100	21.01
01510400	RFS 1/2"	10	100	21.01

Angle valve with double seal o-ring for iron pipe

Code	Size	Box	Carton	Cat.
01510340	3/8"	10	100	21.01
01510440	1/2"	10	100	21.01
01510540	3/4"	10	100	21.01

Thread MF UNI-EN-ISO 228

Series 152

Jet-Line Series: straight lockshield valve with double seal O-ring for iron pipe.

Nickel-plated brass body.
Elastomer seals.
Shockproof ABS handwheel.
Threaded straight connection F UNI-EN-ISO 228 for iron pipe fittings.
Connection to threaded terminal M UNI-EN-ISO 228 (with pre-gasket ogive in PTFE series *).

- Max operating temperature 110 °C
- Max operating pressure 10 Bar

CERTIFICATIONS:

Double seal O.R. straight valve for iron pipe - RFS seal on radiator*

Code	Size	Box	Carton	Cat.
01520300	RFS 3/8"	10	100	21.01
01520400	RFS 1/2"	10	100	21.01

Straight valve with double seal o-ring for iron pipe

Code	Size	Box	Carton	Cat.
01520340	3/8"	10	100	21.01
01520440	1/2"	10	100	21.01
01520540	3/4"	10	100	21.01

Thread MF UNI-EN-ISO 228

Series 587

Angle valve with double seal O-ring for copper or polyethylene pipe, standard rbm connection, "jet-line" series.

Nickel-plated brass body.
Elastomer seals.
Shockproof ABS handwheel.
Threaded angled standard RBM connection for copper, polyethylene, multi-layer pipe fittings.
Connection to threaded terminal M UNI-EN-ISO 228 (with pre-gasket ogive in PTFE series *).

- Max operating temperature 110 °C
- Max operating pressure 10 Bar

Angle valve with double O.R. seal for copper or polyethylene pipe, RFS seal on radiator*

Code	Size	Box	Carton	Cat.
05870300	RFS 3/8"	10	100	21.01
05870400	RFS 1/2"	10	100	21.01

Angle valve with double O.R. seal for copper or polyethylene pipe

Code	Size	Box	Carton	Cat.
05870340	RBM 3/8"	10	100	21.01
05870440	RBM 1/2"	10	100	21.01

System side standard RBM thread W 24.5x19F

Use fittings with RBM Standard thread for pipe connection.

Series 588

Straight valve with double seal O-ring for copper or polyethylene pipe, standard rbm connection,"jet-line" series.

Nickel-plated brass body.
Elastomer seals.
Shockproof ABS handwheel.
Threaded straight standard RBM connection for copper, polyethylene, multi-layer pipe fittings.
Connection to threaded terminal M UNI-EN-ISO 228 (with pre-gasket ogive in PTFE series *).

- Max operating temperature 110 °C
- Max operating pressure 10 Bar

Straight valve with double O.R. seal for copper or polyethylene pipe - RFS seal on radiator*

Code	Size	Box	Carton	Cat.
05880300	RFS 3/8"	10	100	21.01
05880400	RFS 1/2"	10	100	21.01

Straight valve with double seal o-ring for copper or polyethylene pipe

Code	Size	Box	Carton	Cat.
05880340	RBM 3/8"	10	100	21.01
05880440	RBM 1/2"	10	100	21.01

System side standard RBM thread W 24.5x19F

Use fittings with RBM Standard thread for pipe connection.

Series 25

"Single flow" 4-way valve for single pipe circuits.

Nickel-plated brass body. Elastomer seals. Shockproof ABS hand wheel. Internal by-pass with fixed leakage. Polymer probe.
Line connections, centre distance 37 mm threaded M standard RBM for copper, polyethylene and multilayer pipe fittings. Connection to the radiator threaded M UNI-EN-ISO 228.

- Max operating temperature 110 °C
- Max operating pressure 10 Bar
- Probe length 300 mm
- Probe outside diameter 15 mm

Code	Size	Model	Box	Carton	Cat.
00250500	G 3/4"	Single flow	5	20	21.01
00250510	G 3/4"- Ø 18 (*)	Single flow	5	20	21.01
00250550	G 3/4"- SX (**)	Single flow	5	20	21.01
00250600	G 1"	Single flow	5	20	21.01
00250610	G 1"- Ø 18 (*)	Single flow	5	20	21.01
00250650	G 1"- SX (**)	Single flow	5	20	21.01

(*): Can be fed by Ø18 copper pipes (kit valve + reduction code 57.18.00)
(**): Left thread radiator connection

Use fittings with RBM Standard thread for pipe connection.

Series 22

"Uniflux" 4-way valve for single pipe circuits.

Nickel-plated brass body. Elastomer seals. Shockproof ABS hand wheel. Internal by-pass with fixed leakage. Polymer probe.
Line connections, centre distance 37 mm threaded M standard RBM for copper, polyethylene and multilayer pipe fittings. Connection to the radiator threaded M UNI-EN-ISO 228.

- Max operating temperature 110 °C
- Max operating pressure 10 Bar
- Probe length 300 mm
- 1/2" probe outside diameter 10 mm
- 3/4" probe outside diameter 13 mm

Code	Size	Model	Box	Carton	Cat.
00220400	G 1/2"	Uniflux	5	20	21.01
00220420	G 1/2"	Uniflux s.c.	5	20	21.01
00220500	G 3/4"	Uniflux	5	20	21.01
00220530	G 3/4"- Ø 18 (*)	Uniflux	5	20	21.01

(*): Can be fed by Ø18 copper pipes (kit valve + reduction code 57.18.00)

Use fittings with RBM Standard thread for pipe connection.

Series 585

"Biflux" 4-way valve for single pipe circuits.

Nickel-plated brass body.
Elastomer seals.
Shockproof ABS handwheel.
Internal bypass with fixed leakage.
Polymer probe.
In-line connections, centre distance 37 mm M standard RBM thread for copper, polyethylene and multilayer pipe fittings.
Threaded radiator connection M UNI-EN-ISO 228.

- Max operating temperature 110 °C
- Max operating pressure 10 Bar
- Probe length 100 mm
- Probe outside diameter 11 mm

Code	Size	Model	Box	Carton	Cat.
05850400	G 1/2"	Biflux	5	20	21.01
05850410	G 1/2"- Ø 18 (*)	Biflux	5	20	21.01
05850500	G 3/4"	Biflux	5	20	21.01
05850510	G 3/4"-Ø 18 (*)	Biflux	5	20	21.01

(*): Can be fed by Ø18 copper pipes (kit valve + reduction code 57.18.00)

Use fittings with RBM Standard thread for pipe connection.

Series 424

"Uniflux" 4-way valve for single pipe circuits with external probe.

Nickel-plated brass body.
Elastomer seals.
Shockproof ABS handwheel.
Internal bypass with fixed leakage.
In-line connections, centre distance 37 mm M standard RBM thread for copper, polyethylene and multilayer pipe fittings.
Threaded radiator connection M UNI-EN-ISO 228.
Connections for external probe Ø 10 or Ø 15.

- Max operating temperature 110 °C
- Max operating pressure 10 Bar
- Probe not included.

Code	Size	Model	Box	Carton	Cat.
04240470	G 1/2"	Uniflux S.E. -Ø 10	4	16	21.01
04240490	G 1/2"	Uniflux S.E. -Ø 15	4	16	21.01

Radiator side hot fluid inlet.
Use fittings with RBM Standard thread for pipe connection.

Series 249

Kit for heating units that can be fed from single-pipe and two-pipe systems. With RFS.

Nickel-plated brass body.
Elastomer seals.
Shockproof ABS cap and handwheel.
Built-in micrometric lockshield valve.
Internal bypass with 50% bore only for single pipe applications.
In-line connections, centre distance 37 mm M standard RBM thread for copper, polyethylene and multilayer pipe fittings.
Connections for external probe Ø 15 mm.
Threaded connections to terminal M UNI-EN-ISO 228 with pre-gasket ogive in PTFE.

- Max operating temperature 110 °C
- Max operating pressure 10 Bar
- Probe not included.

Kit composed of:
- diverter
- 1/2" manual angle valve

Code	Size	Model	Box	Carton	Cat.
02490450	G 1/2"	Kit 50%*	1	10	21.01
02490400	G 1/2"	Kit 100%**	1	10	21.01

* Single pipe circuits
**Double pipe circuits

Floor or baseboard distribution in-line power supply connections.
Use fittings with RBM Standard thread for pipe connection.

Series 212

Kit for heating units that can be fed from single-pipe and two-pipe systems. With RFS.

Nickel-plated brass body.
Elastomer seals.
Shockproof ABS cap and handwheel.
Built-in micrometric lockshield valve.
Internal bypass with 50% bore only for single pipe applications.
Angle connections, centre distance 37 mm M standard RBM thread for copper, polyethylene and multilayer pipe fittings.
Connections for external probe Ø 15 mm.
Threaded connections to terminal M UNI-EN-ISO 228 with pre-gasket ogive in PTFE.

- Max operating temperature 110 °C
- Max operating pressure 10 Bar
- Probe not included.

Kit composed of:
- angle diverter valve
- 1/2" manual angle valve

Code	Size	Model	Box	Carton	Cat.
02120450	G 1/2"	Kit 50%*	1	10	21.01
02120400	G 1/2"	Kit 100%**	1	10	21.01

* Single pipe circuits
**Double pipe circuits

Angle connections fed from wall.
Use fittings with RBM Standard thread for pipe connection.

Series 165

4-way straight diverter valve for single-pipe and two-pipe systems. With RFS.

Nickel-plated brass body.
Elastomer seals.
Shockproof ABS cap.
Built-in micrometric lockshield valve.
Internal bypass with 50% bore only for single pipe applications.
In-line connections, centre distance 37 mm M standard RBM thread for copper, polyethylene and multilayer pipe fittings.
Threaded connections to radiator M UNI-EN-ISO 228 with pre-gasket ogive in PTFE.
Connection for external probe Ø 15 mm.

- Max operating temperature 110 °C
- Max operating pressure 10 Bar

Code	Size	Model	Box	Carton	Cat.
01650450	G 1/2"	50%*	10	10	21.01
01600400	G 1/2"	100%**	10	10	21.01

Use fittings with RBM Standard thread for pipe connection.

Series 214

4-way angle diverter valve for single-pipe and two-pipe systems. With RFS.

Nickel-plated brass body.
Elastomer seals.
Shockproof ABS cap.
Built-in micrometric lockshield valve.
Internal bypass with 50% bore only for single pipe applications.
Angle connections, centre distance 37 mm M standard RBM thread for copper, polyethylene and multilayer pipe fittings.
Threaded connections to radiator M UNI-EN-ISO 228 with pre-gasket ogive in PTFE.
Connection for external probe Ø 15 mm.

- Max operating temperature 110 °C
- Max operating pressure 10 Bar

Code	Size	Model	Box	Carton	Cat.
02140450	G 1/2"	50%*	10	10	21.01
02140400	G 1/2"	100%**	10	10	21.01

* with RFS

Use fittings with RBM Standard thread for pipe connection.

Series 301.A

Coupled valves, only for shut-off of radiant plates, equipped with adjustable bypass, for single pipe circuits.

Nickel-plated brass body.
Elastomer seals.
Euroconus F G3/4"plate side swivel connections.
M G3/4" Euroconus system side connections.
Connections centre distance 50 mm.

- Max operating temperature 110 °C
- Max operating pressure 10 Bar

Coupled valve with straight bypass

Code	Size	Box	Carton	Cat.
03010510	3/4"x3/4"	5	5	21.01

Coupled valve with angle bypass

Code	Size	Box	Carton	Cat.
03020510	3/4"x3/4"	5	5	21.01

Use fittings with Euroconus G3/4" thread for pipe connection.

Series 301.B

Coupled double pipe valves, only for shut-off of radiant plates, for dual pipe circuits.

Nickel-plated brass body.
Elastomer seals.
Euroconus F G3/4"plate side swivel connections.
M G3/4" Euroconus system side connections.
Connections centre distance 50 mm.

- Max operating temperature 110 °C
- Max operating pressure 10 Bar

Coupled valve without straight bypass

Code	Size	Box	Carton	Cat.
03010580	3/4"	1	50	21.01

Coupled valve without angle bypass

Code	Size	Box	Carton	Cat.
03020580	3/4"	1	50	21.01

Use fittings with Euroconus G3/4" thread for pipe connection.

Series 4036

New angle lockshield shut-off and regulating valve for iron pipe. With RFS.

Nickel-plated brass body.
Elastomer seals.
Shockproof ABS cap.
Threaded angled connection F UNI-EN-ISO 228 for iron pipe.
Connection to terminal through threaded M RFS (UNI-EN-ISO 228) with PTFE pre-gasket ogive.

- Max operating temperature 110 °C
- Max operating pressure 10 Bar

Code	Size	Kv (m³/h)	Box	Carton	Cat.
40360300	G 3/8"	2,8	10	100	21.01
40360400	G 1/2"	3	10	100	21.01

Series 4038

New straight lockshield shut-off and regulating valve for iron pipe. With RFS.

Nickel-plated brass body.
Elastomer seals.
Shockproof ABS cap.
Threaded straight connection F UNI-EN-ISO 228 for iron pipe.
Connection to terminal through threaded M RFS (UNI-EN-ISO 228) with PTFE pre-gasket ogive.

- Max operating temperature 110 °C
- Max operating pressure 10 Bar

Code	Size	Kv (m³/h)	Box	Carton	Cat.
40380300	G 3/8"	1,9	10	100	21.01
40380400	G 1/2"	2,1	10	100	21.01

Series 4037

New angle lockshield shut-off and regulating valve for copper or polyethylene pipe. With RFS.

CERTIFICATIONS:

Nickel-plated brass body.
Elastomer seals.
Shockproof ABS cap.
Threaded angled M standard RBM connection for copper, polyethylene, multilayer pipe fittings.
Connection to threaded terminal M UNI-EN-ISO 228 with pre-gasket ogive in PTFE.

- Max operating temperature 110 °C
- Max operating pressure 10 Bar

Code	Size	Kv (m³/h)	Box	Carton	Cat.
40370300	G 3/8"	2,8	10	100	21.01
40370400	G 1/2"	3	10	100	21.01

Use fittings with RBM Standard thread for pipe connection.

Series 4039

New straight lockshield shut-off and regulating valve for copper or polyethylene pipe. With RFS.

Nickel-plated brass body.
Elastomer seals.
Shockproof ABS cap.
Threaded straight M standard RBM connection for copper, polyethylene, multi-layer pipe fittings.
Connection to threaded terminal M UNI-EN-ISO 228 with pre-gasket ogive in PTFE.

- Max operating temperature 110 °C
- Max operating pressure 10 Bar

Code	Size	Kv (m³/h)	Box	Carton	Cat.
40390300	G 3/8"	1,4	10	100	21.01
40390400	G 1/2"	1,4	10	100	21.01

Use fittings with RBM Standard thread for pipe connection.

Series 9

Angle lockshield shut-off and regulating valve for iron pipe. With RFS.

Nickel-plated brass body.
Elastomer seals.
Shockproof ABS cap.
Threaded angled connection F UNI-EN-ISO 228 for iron pipe.
Connection to terminal through threaded M RFS (UNI-EN-ISO 228) with PTFE pre-gasket ogive (only for 3/8" and 1/2" diameters).

- Max operating temperature 110 °C
- Max operating pressure 10 Bar

Code	Size	Kv (m³/h)	Box	Carton	Cat.
00090300	G 3/8"	3,2	10	100	21.01
00090400	G 1/2"	4,0	10	100	21.01
00090500	G 3/4"	10,8	10	60	21.01
00090600	G 1"	17,1	6	6	21.01
00090700	G 1"1/4	22,5	4	4	21.01

Series 10

Straight lockshield shut-off and regulating valve for iron pipe.

Nickel-plated brass body.
Elastomer seals.
Shockproof ABS cap.
Threaded straight connection F UNI-EN-ISO 228 for iron pipe.
Connection to terminal through threaded M RFS (UNI-EN-ISO 228) with PTFE pre-gasket ogive (only for 3/8" and 1/2" diameters).

- Max operating temperature 110 °C
- Max operating pressure 10 Bar

Code	Size	Kv (m³/h)	Box	Carton	Cat.
00100300	G 3/8"	1,4	10	100	21.01
00100400	G 1/2"	1,8	10	100	21.01
00100500	G 3/4"	4,9	10	60	21.01
00100600	G 1"	8,2	6	6	21.01
00100700	G 1"1/4	22,5	4	4	21.01

21.01 RADIATOR VALVES AND LOCKSHIELDS | LOCKSHIELD REGULATING VALVES

Series 29

Angle lockshield shut-off and regulating valve for copper or polyethylene pipe. With RFS.

Nickel-plated brass body.
Elastomer seals.
Shockproof ABS cap.
Threaded angled M standard RBM connection for copper, polyethylene, multilayer pipe fittings.
Connection to threaded terminal M UNI-EN-ISO 228 with pre-gasket ogive in PTFE.

- Max operating temperature 110 °C
- Max operating pressure 10 Bar

CERTIFICATIONS:

Code	Size	Kv (m³/h)	Box	Carton	Cat.
00290300	G 3/8"	3,2	10	100	21.01
00290310	G 3/8"- Ø 18 (*)	3,2	10	10	21.01
00290400	G 1/2"	4,0	10	100	21.01
00290410	G 1/2"- Ø 18 (*)	4,0	10	10	21.01

(*): Can be fed by Ø18 copper pipes (kit lockshield + reduction code 57.18.00)

Use fittings with RBM Standard thread for pipe connection.

Series 30

Straight lockshield shut-off and regulating valve for copper or polyethylene pipe. With RFS.

Nickel-plated brass body.
Elastomer seals.
Shockproof ABS cap.
Threaded straight M standard RBM connection for copper, polyethylene, multi-layer pipe fittings.
Connection to threaded terminal M UNI-EN-ISO 228 with pre-gasket ogive in PTFE.

- Max operating temperature 110 °C
- Max operating pressure 10 Bar

Code	Size	Kv (m³/h)	Box	Carton	Cat.
00300300	G 3/8"	1,4	10	100	21.01
00300310	G 3/8"- Ø 18 (*)	1,4	10	10	21.01
00300400	G 1/2"	1,8	10	100	21.01
00300410	G 1/2"- Ø 18 (*)	1,8	10	10	21.01

(*): Can be fed by Ø18 copper pipes (kit lockshield + reduction code 57.18.00)

Use fittings with RBM Standard thread for pipe connection.

Series 153

Jet-Line Series: angle lockshield regulating valve for iron pipe.

Nickel-plated brass body.
Elastomer seals.
Shockproof ABS handwheel.
Threaded angled connection F UNI-EN-ISO 228 for iron pipe fittings.
Connection to threaded terminal M UNI-EN-ISO 228 (with pre-gasket ogive in PTFE series *).

- Max operating temperature 110 °C
- Max operating pressure 10 Bar

CERTIFICATIONS:

Angle lockshield regulating valve for iron pipe - RFS seal on radiator*

Code	Size	Box	Carton	Cat.
01530300	RFS 3/8"	10	100	21.01
01530400	RFS 1/2"	10	100	21.01

Angle lockshield regulating valve for iron pipe

Code	Size	Box	Carton	Cat.
01530340	3/8"	10	100	21.01
01530440	1/2"	10	100	21.01
01530540	3/4"	10	100	21.01

Thread MF UNI-EN-ISO 228

Series 154

Jet-Line Series: straight lockshield regulating valve for iron pipe.

Nickel-plated brass body.
Elastomer seals.
Shockproof ABS handwheel.
Threaded straight connection F UNI-EN-ISO 228 for iron pipe fittings.
Connection to threaded terminal M UNI-EN-ISO 228 (with pre-gasket ogive in PTFE series *).

- Max operating temperature 110 °C
- Max operating pressure 10 Bar

CERTIFICATIONS:

Straight lockshield regulating valve for iron pipe - RFS seal on radiator*

Code	Size	Box	Carton	Cat.
01540300	RFS 3/8"	10	100	21.01
01540400	RFS 1/2"	10	100	21.01

Straight lockshield regulating valve for iron pipe

Code	Size	Box	Carton	Cat.
01540340	3/8"	10	100	21.01
01540440	1/2"	10	100	21.01
01540540	3/4"	10	100	21.01

Thread MF UNI-EN-ISO 228

21.01 RADIATOR VALVES AND LOCKSHIELDS | LOCKSHIELD REGULATING VALVES

Series 564

Jet-Line Series: angle lockshield regulating valve for copper or polyethylene pipe, standard RBM connection.

Nickel-plated brass body.
Elastomer seals.
Shockproof ABS handwheel.
Threaded angled standard RBM connection for copper, polyethylene, multi-layer pipe fittings.
Connection to threaded terminal M UNI-EN-ISO 228 (with pre-gasket ogive in PTFE series *).

- Max operating temperature 110 °C
- Max operating pressure 10 Bar

Angle lockshield regulating valve for copper or polyethylene pipe - RFS seal on radiator*

Code	Size	Box	Carton	Cat.
05640300	RFS 3/8"	10	100	21.01
05640400	RFS 1/2"	10	100	21.01

Angle lockshield regulating valve for copper or polyethylene pipe

Code	Size	Box	Carton	Cat.
05640340	RBM 3/8"	10	100	21.01
05640440	RBM 1/2"	10	100	21.01

System side standard RBM thread W 24.5x19F

Use fittings with RBM Standard thread for pipe connection.

Jet-Line Series: straight lockshield regulating valve for copper or polyethylene pipe, standard RBM connection.

Nickel-plated brass body.
Elastomer seals.
Shockproof ABS handwheel.
Threaded straight standard RBM connection for copper, polyethylene, multi-layer pipe fittings.
Connection to threaded terminal M UNI-EN-ISO 228 (with pre-gasket ogive in PTFE series *).

- Max operating temperature 110 °C
- Max operating pressure 10 Bar

Straight lockshield regulating valve for copper or polyethylene pipe - RFS seal on radiator*

Code	Size	Box	Carton	Cat.
05650300	RFS 3/8"	10	100	21.01
05650400	RFS 1/2"	10	100	21.01

Straight lockshield regulating valve for copper or polyethylene pipe

Code	Size	Box	Carton	Cat.
05650340	RBM 3/8"	10	100	21.01
05650440	RBM 1/2"	10	100	21.01

System side standard RBM thread W 24.5x19F

Use fittings with RBM Standard thread for pipe connection.

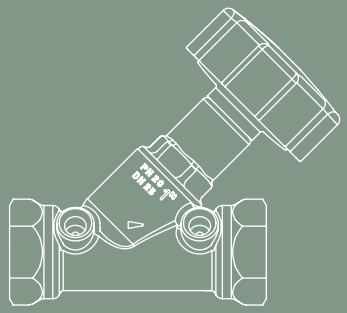

02.
ENERGY
EFFICIENCY

22. HYDRAULIC BALANCING

22.01 HYDRAULIC BALANCING

Balancing lockshield valves
Flow-rate measuring stub pipe
Flow control valves
PICV independent pressure adjustment valves
Tools and accessories

BALANFLOW

Series 619.A

Threaded balancing valve, complete with knob indicating the number of turns, and "memory stop" function.

Body and contact parts in brass.
Seals in FKM.
Threaded connections FF UNI-EN-ISO 228.

- Max operating pressure 20 Bar
- Allowed temperatures -30 ÷ +120 °C
- Equipercentage regulation
- Allowed fluid water and water+glycol 50 %
- Pressure gauge plugs connection G1/8"

CERTIFICATIONS:
DHW

BIM

Code	Size	Kv (m³/h)	Box	Carton	Cat.
06190350	G 3/8"	2,35	1	6	22.01
06190450	G 1/2"	3,35	1	6	22.01
06190550	G 3/4"	4,00	1	6	22.01
06190650	G 1"	11,20	1	6	22.01
06190750	G 1"1/4	13,40	1	6	22.01
06190850	G 1"1/2	19,00	1	6	22.01
06190950	G 2"	28,40	1	6	22.01

Designed for the insertion of pressure plugs for indirect flow rate reading.

To provide for a pair of pressure plugs accessories code. 621.01.50

Series 1147

Insulation shell for Balanflow valve made of expanded polyethylene half-bearings with external antiscratch coating.

Half-bearings fixed with double-sided adhesive tape already applied.

- Fire behaviour class1
- Density 33 kg/m³
- Max operating temperature -40 ÷ +90 °C

Code	Size	Box	Carton	Cat.
11470300	3/8"	10	10	22.01
11470400	1/2"	10	10	22.01
11470500	3/4"	10	10	22.01
11470600	1"	10	10	22.01
11470700	1"1/4	5	5	22.01
11470800	1"1/2	5	5	22.01
11470900	2"	5	5	22.01

BALANFLOW
Series 619.B

Flanged balancing valve, complete with knob indicating the number of turns, and "memory stop" function.

BIM

Cast-iron body.
Elastomer seals.
Flanged connections PN 16.

- Max operating pressure 16 Bar
- Allowed temperatures -10 ÷ +130 °C
- Equipercentage regulation
- Allowed fluid water and water+glycol 50 %
- Pressure gauge plugs connection G1/8"

Code	Size	Kv (m³/h)	Box	Carton	Cat.
06191060	DN 65	93,40	1	1	22.01
06191160	DN 80	122,30	1	1	22.01
06191360	DN 100	200,00	1	1	22.01
06191460	DN 125	304,40	1	1	22.01
06191560	DN 150	400,80	1	1	22.01
06191760	DN 200	685,60	1	1	22.01
06191960	DN 250	952,30	1	1	22.01
06192160	DN 300	1380,20	1	1	22.01

Valve provided with two pressure plugs.

Flange suitable for coupling to counter-flange UNI EN 1092-1.

Series 620.A

Threaded measuring stub pipe for indirect reading of transit flow rate, complete with quick coupling pressure plugs.

Body and pressure plugs in brass.
Elastomer pressure plugs internal seals.
Threaded connections MF UNI-EN-ISO 228.

- Max operating pressure 20 Bar
- Allowed temperatures -30 ÷ +120 °C
- Allowed fluid water and water+glycol 50 %
- Pressure gauge plugs connection G 1/8"

Code	Size	Kv (m³/h)	Box	Carton	Cat.
06200550	G 3/4"	5,80	1	1	22.01
06200650	G 1"	8,80	1	1	22.01
06200750	G 1"1/4	20,10	1	1	22.01
06200850	G 1"1/2	31,20	1	1	22.01
06200950	G 2"	69,90	1	1	22.01

Series 620.B

Flanged measuring stub pipe for indirect reading of transit flow rate, complete with quick coupling pressure plugs.

Grey cast-iron body.
Brass pressure plugs.
Elastomer pressure plugs internal seals.
Wafer flanged connections PN 16.

- Max operating pressure 16 Bar
- Allowed temperatures -10 ÷ +120 °C
- Allowed fluid water and water+glycol 50 %
- Pressure gauge plugs connection G 1/4"

Code	Size	Kv (m³/h)	Box	Carton	Cat.
06201300	DN 100	244,00	1	1	22.01
06201700	DN 200	1010,00	1	1	22.01

Series 2873.A

Automatic flow control valve with externally adjustable cartridge.

BIM

It allows to adjust the rate to the desired value, by acting on the cartridge through suitable adjusting device.
Such operation does not involve the valve.

Brass body.
Polymer cartridge with elastomer diaphragm.
Indicator with graduated scale.
Threaded connections FF UNI-EN-ISO 228.

- Max operating pressure 16 Bar
- Allowed temperatures -20 ÷ +120 °C
- Allowed fluid water and water+glycol 50%
- Pressure gauge plugs connection G1/8"

Code	Size	DP (kPa)	Flow rate (m³/h)	Cartridge	Box	Carton	Cat.
28730410	1/2"	17 - 210	0,100 - 0,412	B	1	1	22.01
28730420	1/2"	17 - 210	0,157 - 0,609	G	1	1	22.01
28730430	1/2"	17 - 200	0,275 - 0,825	RW	1	1	22.01
28730440	1/2"	30 - 400	0,406 - 1,270	RG	1	1	22.01
28730510	3/4"	17 - 210	0,100 - 0,412	B	1	1	22.01
28730520	3/4"	17 - 210	0,157 - 0,609	G	1	1	22.01
28730530	3/4"	17 - 200	0,275 - 0,825	RW	1	1	22.01
28730540	3/4"	30 - 400	0,406 - 1,270	RG	1	1	22.01
28730610	1"	17 - 210	0,100 - 0,412	B	1	1	22.01
28730620	1"	17 - 210	0,157 - 0,609	G	1	1	22.01
28730630	1"	17 - 200	0,275 - 0,825	RW	1	1	22.01
28730640	1"	30 - 400	0,406 - 1,270	RG	1	1	22.01

B = Black
G = Green
RW = Red - b. white
RG = Red - b. grey

Replaceable cartridge. See Service Division.
Cartridges are available in different colours for both the pressure field and flow rate to be immediately identified.
Valve provided with two pressure plugs.

For flow rate adjustment use accessory spanner code 2961.00.02 (see page 291).

Series 2874.A

Automatic flow control valve with externally adjustable cartridge, provided with pressure plugs.

BIM

It allows to adjust the rate to the desired value, by acting on the cartridge through suitable adjusting device.
Such operation does not involve the valve.

Brass body.
Polymer cartridge with elastomer diaphragm.
Indicator with graduated scale.
Threaded connections FF UNI-EN-ISO 228.

- Max operating pressure 16 Bar
- Allowed temperatures -20 ÷ +120 °C
- Allowed fluid water and water+glycol 50%
- Pressure gauge plugs connection G1/8"

Code	Size	DP (kPa)	Flow rate (m³/h)	Cartridge	Box	Carton	Cat.
28740410	G 1/2"	17 - 210	0,100 - 0,412	B	1	1	22.01
28740420	G 1/2"	17 - 210	0,157 - 0,609	G	1	1	22.01
28740430	G 1/2"	17 - 200	0,275 - 0,825	RW	1	1	22.01
28740440	G 1/2"	30 - 400	0,406 - 1,270	RG	1	1	22.01
28740510	G 3/4"	17 - 210	0,100 - 0,412	B	1	1	22.01
28740520	G 3/4"	17 - 210	0,157 - 0,609	G	1	1	22.01
28740530	G 3/4"	17 - 200	0,275 - 0,825	RW	1	1	22.01
28740540	G 3/4"	30 - 400	0,406 - 1,270	RG	1	1	22.01
28740610	G 1"	17 - 210	0,100 - 0,412	B	1	1	22.01
28740620	G 1"	17 - 210	0,157 - 0,609	G	1	1	22.01
28740630	G 1"	17 - 200	0,275 - 0,825	RW	1	1	22.01
28740640	G 1"	30 - 400	0,406 - 1,270	RG	1	1	22.01

B = Black
G = Green
RW = Red - b. white
RG = Red - b. grey

Replaceable cartridge. See Service Division.
Cartridges are available in different colours for both the pressure field and flow rate to be immediately identified.
Valve provided with two pressure plugs.

For flow rate adjustment use accessory spanner code 2961.00.02 (see page 291).

AUTOMATIC FLOW CONTROL VALVE

Automatic flow control valve allow maintaining a constant flow rate at the desired value, within a wide differential pressure range between upstream and downstream.

The flow rate value is set through a cartridge adjustable from outside using a special accessory spanner. During this operation, the valve does not need to be shut off. Inserted in hydraulic circuits, the automatic balancing valve **ensures maintaining the design flow rate.**

USE

They are particularly indicated in the following cases:
- Adjustment for pumping stations in central thermal fluid systems.
- Customer junctions balancing.
- Rising pillars balancing.
- Third way adjustment and balancing on thermoregulation units.

CHOICE

It is advisable to choose a automatic flow control valve whose adjustment degree corresponds to about half the cartridge flow rate range.

In this way, with the design nominal flow rate, a sufficient calibration margin is preserved so as to cope with any corrections due to inevitable route changes during work.

POSSIBLE APPLICATIONS

Automatic flow control valve are mainly used on the hydraulic circuit delivery pipe. Below are some typical application examples:

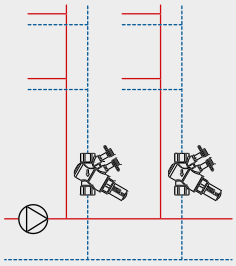

FIGURE 1

Automatic flow control valve with rising pillars balancing function.

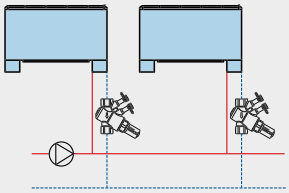

FIGURE 2

Automatic flow control valve with the function of serving in-line terminal elements (radiators, convectors, fan-coils, etc.).

OPERATING PRINCIPLE

Pressure P2 is determined by the membrane reacting to pressure P1 acting on the membrane upper chamber.

Interacting with the spring, the difference (P1-P2) remains constant, while maintaining a steady ΔP through the orifice. As a result, a constant flow rate is obtained through the valve, regardless of the variations of the pressure difference between upstream and downstream.

Orifice bore

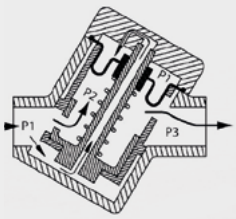

KEY:
P1 and **P3**: Circuit pressure values
P2: Pressure determined by membrane
ΔP = (P1-P3) = Total pressure difference between upstream/downstream

→ Indicates pressure variations
→ Indicates the flow direction

Series 2873.B

Pressure independent control valve.

BIM

It allows to keep the flow rate to the desired level even when pressure conditions change in the circuit where it is inserted.

Brass body.
Polymer cartridge with elastomer diaphragm.
Indicator with graduated scale.
Threaded connections FF UNI-EN-ISO 228.

- Max operating pressure 16 Bar
- Allowed temperatures -20 ÷ +120 °C
- Allowed fluid water and water+glycol 50%
- Pressure gauge plugs connection G1/8"

Code	Size	DP (kPa)	Flow rate (m³/h)	Cartridge	Box	Carton	Cat.
28730450	1/2"	16 - 200	0,037 - 0,575	G	1	1	22.01
28730460	1/2"	30 - 400	0,064 - 1,110	B	1	1	22.01
28730550	3/4"	16 - 200	0,037 - 0,575	G	1	1	22.01
28730560	3/4"	30 - 400	0,064 - 1,110	B	1	1	22.01
28730650	1"	16 - 200	0,037 - 0,575	G	1	1	22.01
28730660	1"	30 - 400	0,064 - 1,110	B	1	1	22.01

G = O.R. Grey
B = O.R. Black

Replaceable cartridge. See Service Division.
Cartridges are available in different colours for both the pressure field and flow rate to be immediately identified.

For flow rate adjustment use accessory spanner code 2961.00.02 (see page 291).
Optional actuator series 2881 - 2882 to be ordered separately (see page 290).

Series 2874.B

Pressure independent control valve, provided with pressure plugs.

BIM

It allows to keep the flow rate to the desired level even when pressure conditions change in the circuit where it is inserted.

Brass body.
Polymer cartridge with elastomer diaphragm.
Indicator with graduated scale.
Threaded connections FF UNI-EN-ISO 228.

- Max operating pressure 16 Bar
- Allowed temperatures -20 ÷ +120 °C
- Allowed fluid water and water+glycol 50%
- Pressure gauge plugs connection G1/8"

Code	Size	DP (kPa)	Flow rate (m³/h)	Cartridge	Box	Carton	Cat.
28740450	1/2"	16 - 200	0,037 - 0,575	G	1	1	22.01
28740460	1/2"	30 - 400	0,064 - 1,110	B	1	1	22.01
28740550	3/4"	16 - 200	0,037 - 0,575	G	1	1	22.01
28740560	3/4"	30 - 400	0,064 - 1,110	B	1	1	22.01
28740650	1"	16 - 200	0,037 - 0,575	G	1	1	22.01
28740660	1"	30 - 400	0,064 - 1,110	B	1	1	22.01

G = O.R. Grey
B = O.R. Black

Replaceable cartridge. See Service Division.
Cartridges are available in different colours for both the pressure field and flow rate to be immediately identified.
Valve provided with two pressure plugs.

For flow rate adjustment use accessory spanner code 2961.00.02 (see page 291).
Optional actuator series 2881 - 2882 to be ordered separately (see page 290).

22.01 HYDRAULIC BALANCING | PICV INDEPENDENT PRESSURE ADJUSTMENT VALVES

Series 3717

Valve system that combines the pressure independent control valve with isolation, flushing, draining and commissioning components into a prefabricated tested and ready to install terminal bypass unit.

It allows pressure independent control ensuring full stroke against pressure fluctuation.
It can be used also for flushing and isolating operations at whatever of commissioning and maintenance stage.
The unit can be used for both heating and cooling.

All components made in DZR Brass.
Threaded connections FF UNI-EN-ISO 228.

- Max operating pressure 25 Bar
- Allowed temperatures -10 ÷ +120 °C
- Allowed fluid water and water+glycol 50%

Code	Size	Flow rate (m³/h)	Box	Carton	Cat.
37170550	3/4"	0,4	1	2	22.01
37170560	3/4"	0,7	1	2	22.01
37170570	3/4"	1,3	1	2	22.01

Supplied with:
isolation valves
strainer
draining point
P/T plugs
integrated venturi metering station
PICV valve for flow, temperature and pressure control

PRESSURE INDEPENDENT CONTROL VALVE

The pressure independent control valve allows adjusting and keeping the flow rate constant to the desired value, within a wide differential pressure range upstream and downstream. Therefore, it encloses the functions of a automatic flow control valve and a control valve in a single product.

The flow rate value is adjusted in the following ways:
- Through a cartridge adjustable from outside (manual operation to be carried out using a special accessory spanner) so as to limit the maximum set value.
- Through an electrothermal or electrical motor (automatic operation) according to the thermal loads required by the system.

During these operations/adjustments the valve does not need to be shut off.

USE

It is particularly indicated in the following cases:

- Adjustment for pumping stations in central thermal fluid systems.
- Terminal balancing and adjustment on customer junctions.
- Third way adjustment and balancing on thermoregulation units.

OPERATING PRINCIPLE

Pressure P2 is determined by the membrane reacting to pressure P1 acting on the membrane upper chamber.
Interacting with the spring, the difference (P1-P2) remains constant, while maintaining a steady ΔP through the orifice. As a result, a **constant flow rate through the valve is obtained regardless of variations in the pressure difference between upstream and downstream, which can be adjusted by the motor depending on the system thermal requirements.**

CHOICE

It is advisable to choose the pressure independent control valve, the pressure adjustment degree corresponding to about half the cartridge flow rate range.

In this way, with the design nominal flow rate, a sufficient calibration margin is preserved so as to cope with any corrections due to inevitable route changes during work.

KEY:
1 Control device ΔP
2 Flow rate adjustment device
P1 and **P3**: Circuit pressure values
P2: Pressure determined by membrane
ΔP = (P1-P3) = Total pressure difference between upstream/downstream

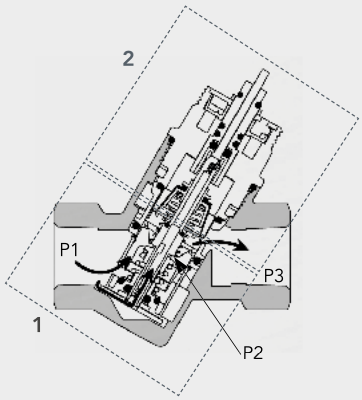

POSSIBLE APPLICATIONS

Pressure independent control valves are mainly used on the hydraulic circuit return pipe. Below are some typical application examples:

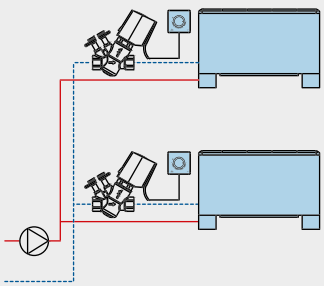

Figure 1

Pressure independent control valve with the function of serving in-line terminal elements (radiators, convectors, fancoils, etc.). Each valve provided with an thermoelectric motor is controlled by a thermostat/chronothermostat.

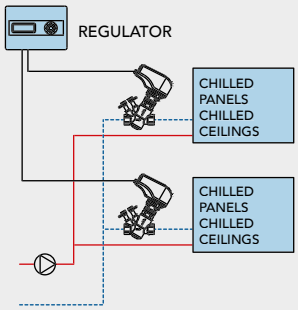

Figure 2

Pressure independent control valve with the function of serving terminal elements (chilled panels, chilled beams, etc.). Each valve provided with an electrical motor is managed by a controller (signal 0÷10V / 230V / 24V).

Series 3566

Portable electronic differential pressure and flow rate measuring instrument. Suitable for detecting work parameters of balancing valves and of measuring stub pipes. Battery-operated.

Supplied complete with professional case and holes for connection to circuit.
Pair of adapters code 932.01.00 not included.

- Max allowable static pressure: 20 Bar
- Measurement range: 2 kPa ÷ 600 kPa
- Accuracy: +/-2% of reading or +/-0.2 kPa whichever is the greater

Instrument with the following accessories:
- Pair of pressure plugs code 621.01.50
- Adapter kit code 1422.02.00
- Cartridge adjustment spanner code 2961.00.02

Code	Box	Carton	Cat.
35660000	1	1	22.01

Option of using the instrumental rental service. Contact RBM's sales department for the terms, conditions and prices.

Series 932

Pair of needle adapters to measure pressure.

Connection of the electronic differential pressure measuring instrument to the pressure plugs on the measuring stub pipes and RBM balancing valves.

Brass body.
Steel needle.
Threaded connections F UNI-EN-ISO 228.

- Max operating pressure 16 Bar
- Max operating temperature 120 °C

Code	Size	Box	Carton	Cat.
09320100	1/8"	1	1	22.01

Used to connect pressure plugs code 621.01.50 to digital measuring instrument code 3566.00.00

Series 621

Pair of pressure plugs.

Body and plugs in brass.
Elastomer pressure plugs internal seals.
Threaded connections M UNI-EN-ISO 228.

- Max operating pressure 16 Bar
- Max operating temperature 120 °C

Code	Size	Box	Carton	Cat.
06210150*	1/8"	1	10	22.01

*Pressure plugs for balancing valves and threaded stub pipes.

Pressure plugs for needle adapters code 932.01.00
Accessory supplied with the digital meter code 3566.00.00

Series 1422

1/4"M X 1/8"F reducing coupling pair. To adapt 1/8" gauge plugs, code 621.01.50, to stub pipes and RBM flanged balancing valves with 1/4" connection.

Brass body.
Elastomer seals.
Threaded connections MF UNI-EN-ISO 228.

- Max operating pressure 16 Bar
- Max operating temperature 120 °C

Code	Size A	Size B	Box	Carton	Cat.
14220200	1/4" M	1/8"- F	1	10	22.01

For pressure gauge connections other than the G 1/4" F standard, contact RBM for more specifications about the accessory to be connected to the measuring instrument.
Accessory supplied with the digital meter code 3566.00.00

Series 2882

Electromechanical actuator. Complete with valve body clamping swivel and electric power cable.

Normally closed valve position when power missing.

- Power supply 24/230 V
- Consumption 5 W
- Frequency 50Hz
- Electric protection IP54
- Cable length 1 m

Code	Power supply	Box	Carton	Cat.
28820002	24V AC 0÷10V	1	1	22.01
28820012	110-230V AC 3 POINTS	1	1	22.01
28820022	24V AC 3 POINTS	1	1	22.01

Specific accessory for independent pressure control valve series 2873 and 2874.

Series 2881

Electrothermal servo control. Complete with clamping ring nut to valve body and electrical power cable. Version without auxiliary microswitch (2 wires).

Normally closed valve position when power missing.

- Power supply 24/230 V
- Consumption 2,5 W
- Frequency 50Hz
- Electric protection IP54
- Cable length 1 m
- Nominal thrust 170N

Code	Power supply	Box	Carton	Cat.
28810012	24V AC/DC	1	50	22.01
28810022	230V AC	1	50	22.01

Specific accessory for independent pressure control valve series 2873 and 2874.

Series 3537

Adapter for the series 3535 and 3536 differential pressure control and balancing valve capillary pipe.

Brass body.
Threaded connection M UNI-EN-ISO 228.

- Max operating pressure 16 Bar
- Max operating temperature 120 °C

Code	Size	Box	Carton	Cat.
35370100*	1/8"	1	1	22.01
35370200**	1/4"	1	1	22.01

*Suitable for connection with series 619 Balanflow balancing valves
**Suitable for connection to ball valves with series 3465 water drain.

To be used to connect the capillary pipe of the series 3535 and 3536 differential pressure control and balancing valves to control wells with 1/8" or 1/4" connection.

Series 2961

Cap adjusting wrench.

It allows to adjust the flow rate to the desired value, by acting on the cartridge.
Such operation does not involve the valve.

Code	Box	Carton	Cat.
29610002	1	1	22.01

Specific accessory for automatic flow control valve and independent pressure control valve series 2873 and 2874.

Accessory supplied with the digital meter code 3566.00.00

RBM

03. CLIMATE COMFORT

GROUP		CATEGORY		LINE	
30. Radiant climate control systems	293	**30.01** Manifolds	294	Brass compact manifold kits	294
				Polymer compact manifold kits	299
				1"1/4 manifolds kits	303
				Manifold kits for Industrial Application	304
				Anticondensation manifold kits	305
				Modular brass manifold kits	308
		30.02 Mixing and distibution units	315	Mixing and distribution units	316
				Kilma Basic 2 mixing unit	330
				Kilma Easy 2 mixing unit	332
		30.03 Manifold cabinet	335	Manifold cabinet	338
		30.04 Insulation panels	342	Insulation panels	343
		30.05 Dry insulation system	345	Kilma Futura	346
		30.06 Pipes	355	Polyethylene pipes	356
		30.07 Components for radiant systems	361	Components for radiant systems	362
				Distribution accessories	374
		30.08 Termoregulation	379	Thermostats,programmable thermostats and room humidity regulator	380

30.01 MANIFOLDS | BRASS COMPACT MANIFOLD KITS

Series 608

Brass compact manifold kit.

Each kit contains:
n° 1 multi-way manifold unit complete with flow meters with lockshield and flow indicator function;
n° 1 multi-way manifold unit complete with valves with thermostatic option with hand wheel;
1 pair of plastic brackets for fixing manifolds.

- Temperature range 0÷80 °C
- Max operating pressure 10 Bar

BIM

Code	Size	Ways	Box	Carton	Cat.
06082610	1"	2+2	1	1	30.01
06080610	1"	3+3	1	1	30.01
06090610	1"	4+4	1	1	30.01
06100610	1"	5+5	1	1	30.01
06110610	1"	6+6	1	1	30.01
06120610	1"	7+7	1	1	30.01
06130610	1"	8+8	1	1	30.01
06140610	1"	9+9	1	1	30.01
06150610	1"	10+10	1	1	30.01
06160610	1"	11+11	1	1	30.01
06161210	1"	12+12	1	1	30.01
06161310	1"	13+13	1	1	30.01
06161410	1"	14+14	1	1	30.01

Centre distance connections through 50mm distribution -EUROCONUS G3/4" UNI-EN-ISO 228 threading

Manifold kit can be fix on in walls in 8 cm box.
Made up of flow meter supply indicator on each supply way. Loose packaged components.
Use fittings with Euroconus G3/4" thread for pipe connection.

30.01 MANIFOLDS | BRASS COMPACT MANIFOLD KITS

Series 2028.A

Brass compact manifold kit.

Each kit contains:
n° 1 multi-way manifold unit complete with flow meters with lockshield and flow indicator function;
n° 1 multi-way manifold unit complete with valves with thermostatic option with hand wheel;
1 pair of plastic brackets for fixing manifolds;
n° 2 thermometers 0÷80 °C;
n° 2 union fittings;
1 x 1" air / water automatic discharge terminal unit;
n° 1 manual 1" air / water discharge terminal unit.

- Temperature range 0÷80 °C
- Max operating pressure 10 Bar

BIM

Code	Size	Ways	Box	Carton	Cat.
20280610	1"	2+2	1	1	30.01
20290610	1"	3+3	1	1	30.01
20300610	1"	4+4	1	1	30.01
20310610	1"	5+5	1	1	30.01
20320610	1"	6+6	1	1	30.01
20330610	1"	7+7	1	1	30.01
20340610	1"	8+8	1	1	30.01
20350610	1"	9+9	1	1	30.01
20360610	1"	10+10	1	1	30.01
20370610	1"	11+11	1	1	30.01
20380610	1"	12+12	1	1	30.01
20381310	1"	13+13	1	1	30.01
20381410	1"	14+14	1	1	30.01

Centre distance connections through 50mm distribution -EUROCONUS G3/4" UNI-EN-ISO 228 threading

Manifold kit can be fix on in walls in 8 cm box.
Made up of flow meter supply indicator on each supply way. Loose packaged components.
Use fittings with Euroconus G3/4" thread for pipe connection.
Composition that can be used in combination with mixing units.

30.01 MANIFOLDS | BRASS COMPACT MANIFOLD KITS

Series 2028.C

Brass compact manifold kit.

- Temperature range 0÷80 °C
- Max operating pressure 10 Bar

- Each kit contains:
- n° 1 multi-way manifold unit complete with flow meters with lockshield and flow indicator function;
- n° 1 multi-way manifold unit complete with valves with thermostatic option with hand wheel;
- 1 pair of plastic brackets for fixing manifolds;
- n° 2 1" ball valves with built-in thermometer 0÷80 °C;
- n° 2 union fittings;
- 1 x 1" air / water automatic discharge terminal unit;
- n° 1 manual 1" air / water discharge terminal unit.

BIM

Code	Size	Ways	Box	Carton	Cat.
20280620	1"	2+2	1	1	30.01
20290620	1"	3+3	1	1	30.01
20300620	1"	4+4	1	1	30.01
20310620	1"	5+5	1	1	30.01
20320620	1"	6+6	1	1	30.01
20330620	1"	7+7	1	1	30.01
20340620	1"	8+8	1	1	30.01
20350620	1"	9+9	1	1	30.01
20360620	1"	10+10	1	1	30.01
20370620	1"	11+11	1	1	30.01
20380620	1"	12+12	1	1	30.01
20381320	1"	13+13	1	1	30.01
20381420	1"	14+14	1	1	30.01

Centre distance connections through 50mm distribution -EUROCONUS G3/4" UNI-EN-ISO 228 threading

Manifold kit can be fix on in walls in 8 cm box.
Made up of flow meter supply indicator on each supply way. Loose packaged components.
Use fittings with Euroconus G3/4" thread for pipe connection.

Series 3784.A

Insulation shell for 2028 series manifold consisting of polyethylene foam half shells with scratch-resistant film outer coating.

Fire behaviour class I
Density 33 kg/m³
Max operating temperature -40 ÷ +90 °C

Code	Size	Box	Carton	Cat.
37841010*	1"	1	1	30.01
37841410**	1"	1	1	30.01

* for 2-10 way manifolds
** for 11-14 way manifolds

Series 3784.B

Insulation shell for terminal unit with series 449 automatic vent valve made from expanded polyethylene half-bearings with external anti-scratch coating.

Fire behaviour class I
Density 33 kg/m³
Max operating temperature -40 ÷ +90 °C

Code	Size	Box	Carton	Cat.
37840010	1"1/4	1	1	30.01

Series 3784.C

Insulation shell for terminal unit with series 450 manual vent valve made from expanded polyethylene half-bearings with external anti-scratch coating.

Fire behaviour class I
Density 33 kg/m³
Max operating temperature -40 ÷ +90 °C

Code	Size	Box	Carton	Cat.
37840020	1"	1	1	30.01

Series 3785

Insulation shell for series 67.A ball valve, made of expanded polyethylene half-bearings with external antiscratch coating.

Fire behaviour class I
Density 33 kg/m³
Max operating temperature -40 ÷ +90 °C

Code	Size	Box	Carton	Cat.
37850000	1"	1	1	30.01

MANIFOLDS KIT

Polymer and brass for radiant systems

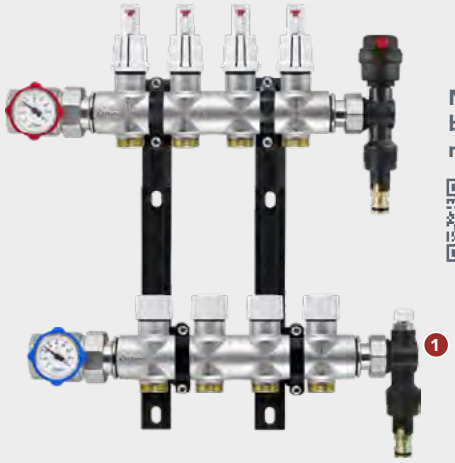

Nickel-plated brass compact manifold kits

Technopolymer compact manifold kits

Manifold kits anticondensation

Space-saving: insertion in 80 mm thick boxes

Shut-off ball valves with built-in thermometer

Manual or automatic shut-off on-off of individual circuits

Micrometric control of the passing flow to balance the circuits

Easier system supply/discharge: thanks to terminal valves 1

Direct reading on flow meter of flow rate value in transit on individual circuit

Flow meter with adjustment memory function (memory stop)

Manifold with micro-corrosion retention chamber: allows purging of accumulated residues through the tap 1

Attention to materials: RBM offers manifolds made of externally nickel-plated brass and/or technopolymer; high quality materials for maximum reliability over time; not subject to corrosion that can impair the functioning of the system

Made in one piece: no possibility of leakage

Built-in automatic venting valve

30.01 MANIFOLDS | POLYMER COMPACT MANIFOLD KITS

Series 1410.A

Compact polymer manifolds kit.

Each kit contains:
n° 1 multi-way manifold unit complete with flow meters with lockshield and flow indicator function;
n° 1 multi-way manifold unit complete with valves with thermostatic option with hand wheel;
1 pair of plastic brackets for fixing manifolds.

- Temperature range 5÷80 °C
- Max. operating pressure 8 Bar

BIM

Code	Size	Ways	Box	Carton	Cat.
14100610	1"	2+2	1	1	30.01
14110610	1"	3+3	1	1	30.01
14120610	1"	4+4	1	1	30.01
14130610	1"	5+5	1	1	30.01
14140610	1"	6+6	1	1	30.01
14150610	1"	7+7	1	1	30.01
14160610	1"	8+8	1	1	30.01
14170610	1"	9+9	1	1	30.01
14180610	1"	10+10	1	1	30.01
14190610	1"	11+11	1	1	30.01
14200610	1"	12+12	1	1	30.01
14201310	1"	13+13	1	1	30.01
14201410	1"	14+14	1	1	30.01

Centre distance connections through 50mm distribution -EUROCONUS G3/4" UNI-EN-ISO 228 threading

Manifold kit can be fix on in walls in 8 cm box.
Flow meter supply indicator on each supply way.
Use fittings with Euroconus G3/4" thread for pipe connection.

Warning: branch pipe fittings tightened to max torque of 30Nm.

30.01 MANIFOLDS | POLYMER COMPACT MANIFOLD KITS

Series 1410.B

Compact polymer manifolds kit.

Each kit contains:
n° 1 multi-way manifold unit complete with flow meters with lockshield and flow indicator function;
n° 1 multi-way manifold unit complete with valves with thermostatic option with hand wheel;
1 pair of plastic brackets for fixing manifolds; 2 thermometers 0÷80 °C;
n° 2 union fittings;
1 x 1" air / water automatic discharge terminal unit;
n° 1 manual 1" air / water discharge terminal unit.

- Temperature range 5÷80 °C
- Max. operating pressure 8 Bar

BIM

Code	Size	Ways	Box	Carton	Cat.
14100640	1"	2+2	1	1	30.01
14110640	1"	3+3	1	1	30.01
14120640	1"	4+4	1	1	30.01
14130640	1"	5+5	1	1	30.01
14140640	1"	6+6	1	1	30.01
14150640	1"	7+7	1	1	30.01
14160640	1"	8+8	1	1	30.01
14170640	1"	9+9	1	1	30.01
14180640	1"	10+10	1	1	30.01
14190640	1"	11+11	1	1	30.01
14200640	1"	12+12	1	1	30.01
14201340	1"	13+13	1	1	30.01
14201440	1"	14+14	1	1	30.01

Centre distance connections through 50mm distribution -EUROCONUS G3/4" UNI-EN-ISO 228 threading

Manifold kit can be fix on in walls in 8 cm box.
Flow meter supply indicator on each supply way.
Use fittings with Euroconus G3/4" thread for pipe connection.
Composition that can be used in combination with mixing units.

Warning: branch pipe fittings tightened to max torque of 30Nm.

Series 1410.D

Compact polymer manifolds kit.

Each kit contains:
n° 1 multi-way manifold unit complete with flow meters with lockshield and flow indicator function;
n° 1 multi-way manifold unit complete with valves with thermostatic option with hand wheel;
1 pair of plastic brackets for fixing manifolds;
n° 2 1" ball valves with built-in thermometer 0÷80 °C;
n° 2 union fittings;
1 x 1" air / water automatic discharge terminal unit;
n° 1 manual 1" air / water discharge terminal unit.

- Temperature range 5÷80 °C
- Max. operating pressure 8 Bar

BIM

Code	Size	Ways	Box	Carton	Cat.
14100620	1"	2+2	1	1	30.01
14110620	1"	3+3	1	1	30.01
14120620	1"	4+4	1	1	30.01
14130620	1"	5+5	1	1	30.01
14140620	1"	6+6	1	1	30.01
14150620	1"	7+7	1	1	30.01
14160620	1"	8+8	1	1	30.01
14170620	1"	9+9	1	1	30.01
14180620	1"	10+10	1	1	30.01
14190620	1"	11+11	1	1	30.01
14200620	1"	12+12	1	1	30.01
14201320	1"	13+13	1	1	30.01
14201420	1"	14+14	1	1	30.01

Centre distance connections through 50mm distribution -EUROCONUS G3/4" UNI-EN-ISO 228 threading

Manifold kit can be fix on in walls in 8 cm box.
Flow rate indicator flow meters on each supply way, air vent valves. Loose packaged components.
Use fittings with Euroconus G3/4" thread for pipe connection.

Warning: branch pipe fittings tightened to max torque of 30Nm.

MANIFOLDS COUPLING 1" / HOUSING BOXES

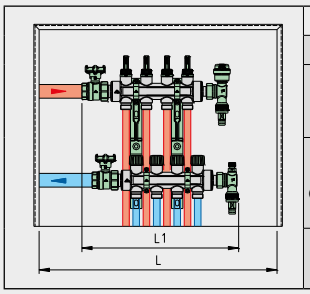

POLYMER ANTI CONDENSATION MANIFOLDS WITH RELIEF VALVE **1410 series**												
2	3	4	5	6	7	8	9	10	11	12	13	14
L1 (mm) 285	L1 (mm) 335	L1 (mm) 385	L1 (mm) 435	L1 (mm) 485	L1 (mm) 535	L1 (mm) 585	L1 (mm) 635	L1 (mm) 685	L1 (mm) 795	L1 (mm) 845	L1 (mm) 895	L1 (mm) 945
L=400 Cod. **2606.40.02**		L=600 Cod. **2606.60.02**			L=800 Cod. **2606.80.02**				L=1000 Cod. **2606.10.02**			
L=550 Cod. **1972.55.00***					L=700 Cod. **1972.70.00***			L=850 Cod. **1972.85.00***		UNAVAILABLE QUICKBOX		

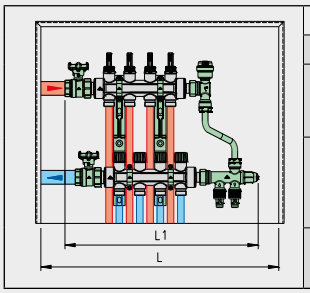

POLYMER ANTI CONDENSATION MANIFOLDS WITH BY-PASS **1410 series**											
2	3	4	5	6	7	8	9	10	11	12	13
L1 (mm) 370	L1 (mm) 420	L1 (mm) 470	L1 (mm) 520	L1 (mm) 570	L1 (mm) 620	L1 (mm) 670	L1 (mm) 720	L1 (mm) 770	L1 (mm) 880	L1 (mm) 930	L1 (mm) 980
L=600 Cod. **2606.60.02**				L=800 Cod. **2606.80.02**				L=1000 Cod. **2606.10.02**			
L=550 Cod. **1972.55.00***			L=700 Cod. **1972.70.00***			L=850 Cod. **1972.85.00***			UNAVAILABLE QUICKBOX		

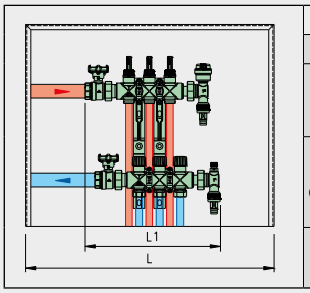

BRASS MULTI-ZONE MODULAR MANIFOLDS WITH RELIEF VALVES **608 - 2028 series**												
2	3	4	5	6	7	8	9	10	11	12	13	14
L1 (mm) 280	L1 (mm) 330	L1 (mm) 380	L1 (mm) 430	L1 (mm) 480	L1 (mm) 530	L1 (mm) 580	L1 (mm) 630	L1 (mm) 680	L1 (mm) 745	L1 (mm) 795	L1 (mm) 845	L1 (mm) 895
L=400 Cod. **2606.40.02**		L=600 Cod. **2606.60.02**			L=800 Cod. **2606.80.02**				L=1000 Cod. **2606.10.02**			
L=550 Cod. **1972.55.00***					L=700 Cod. **1972.70.00***			L=850 Cod. **1972.85.00***		UNAVAILABLE QUICKBOX		

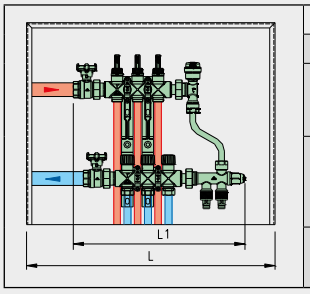

BRASS MULTI-ZONE MODULAR MANIFOLDS WITH BY-PASS **608 - 2028 series**											
2	3	4	5	6	7	8	9	10	11	12	13
L1 (mm) 365	L1 (mm) 415	L1 (mm) 465	L1 (mm) 515	L1 (mm) 565	L1 (mm) 615	L1 (mm) 665	L1 (mm) 715	L1 (mm) 765	L1 (mm) 830	L1 (mm) 880	L1 (mm) 930
L=600 Cod. **2606.60.02**				L=800 Cod. **2606.80.02**				L=1000 Cod. **2606.10.02**			
L=550 Cod. **1972.55.00***			L=700 Cod. **1972.70.00***			L=850 Cod. **1972.85.00***			UNAVAILABLE QUICKBOX		

* To house the manifolds in the Quickbox box it is necessary to use the dedicated brackets, supplied with the box

30.01 MANIFOLDS | 1"1/4 MANIFOLD KIT

Series 279

1"1/4 manifolds kit

Each kit consists of: (loose pieces)
n° 1 Manifold kit (depending on the configuration)
n° 1 Air vent valve with 1"1/4 side attachment code 216.07.60
n° 1 manual discharge unit code. 450.07.00
n° 2 Ball valves with 1"1/4 fitting code 67.07.02
n° 1 pair of Ø 40 thermometers code 303.04.00
n° 2 1"1/4 connection fittings code 96.07.00
n° 3 or more 3/4" straight lockshields (EUROCONUS) code 215.05.50 (depending on the manifold outlets)
n° 3 or more 3/4" straight valves with thermostatic outlets (EUROCONUS) code 267.05.50 (depending on the manifold outlets)

Code	Size	Ways	Box	Carton	Cat.
02790700	1"1/4	3+3	1	1	30.01
02800700	1"1/4	4+4	1	1	30.01
02810700	1"1/4	5+5	1	1	30.01
02820700	1"1/4	6+6	1	1	30.01
02830700	1"1/4	7+7	1	1	30.01
02840700	1"1/4	8+8	1	1	30.01
02850700	1"1/4	9+9	1	1	30.01
02860700	1"1/4	10+10	1	1	30.01
02870700	1"1/4	11+11	1	1	30.01
02880700	1"1/4	12+12	1	1	30.01

Centre distance connections through 50mm distribution -EUROCONUS G3/4" UNI-EN-ISO 228 threading

Use RBM fittings with G3/4" Euroconus thread for pipe connection. Available 3769 series insulation.

KILMA HIGH FLOW

Series 1349

2" manifolds kit.

Each kit consists of: (pre-assembled pieces)
n° 2 Manifolds (composition based on request)
n° 2 metal clamping brackets with relative clamping screws and vibration-damping supports.
Ball shut-off valves for each distribution way.
n° 1 Air vent valve
n° 1 Manual air discharge, system loading unit.

BIM

Code	Size	Ways	Box	Carton	Cat.
13480902	2"	4+4	1	1	30.01
13490902	2"	5+5	1	1	30.01
13500902	2"	6+6	1	1	30.01
13510902	2"	7+7	1	1	30.01
13520902	2"	8+8	1	1	30.01
13530902	2"	9+9	1	1	30.01
13540902	2"	10+10	1	1	30.01
13550902	2"	11+11	1	1	30.01
13560902	2"	12+12	1	1	30.01
13570902	2"	13+13	1	1	30.01
13580902	2"	14+14	1	1	30.01

Distribution way connections, centre distance 70 mm - G 1" M thread

Use RBM fittings with G1" thread for pipe connection.

30.01 MANIFOLDS | ANTICONDENSATION MANIFOLD KITS

Series 1002.A

Modular manifold kits in anti-condensation polymer.

Each kit consists of: (pre-assembled components)
n° 1 multi-way manifold unit complete with micrometric lockshield valves with graduated handwheel;
n° 1 multi-way manifold unit complete with valves with thermostatic option with hand wheel;
1 pair of plastic brackets for fixing manifolds.

- Temperature range 5÷80 °C
- Max. operating pressure 8 Bar

PATENTED

Code	Size	Ways	Box	Carton	Cat.
10020660	1"	2+2	1	1	30.01
10030660	1"	3+3	1	1	30.01
10040660	1"	4+4	1	1	30.01
10050660	1"	5+5	1	1	30.01
10060660	1"	6+6	1	1	30.01
10070660	1"	7+7	1	1	30.01
10080660	1"	8+8	1	1	30.01
10090660	1"	9+9	1	1	30.01
10100660	1"	10+10	1	1	30.01
10110660	1"	11+11	1	1	30.01
10120660	1"	12+12	1	1	30.01
10130660	1"	13+13	1	1	30.01

Centre distance connections through 50mm distribution -EUROCONUS G3/4" UNI-EN-ISO 228 threading

Adjustable lockshield valves with graduated hand wheel.
Manifolds with internal cavities with thermal insulation and anti-condensation functions.
Use RBM fittings with Euroconus G3/4" thread for pipe connection.

Warning: branch pipe fittings tightened to max torque of 30Nm.

30.01 MANIFOLDS | ANTICONDENSATION MANIFOLD KITS

Series 1002.B

Modular manifold kits in anti-condensation polymer.

Each kit consists of: (pre-assembled components)
n° 1 multi-way manifold unit complete with flow meters with lockshield and flow indicator function;
n° 1 multi-way manifold unit complete with valves with thermostatic option with hand wheel;
1 pair of plastic brackets for fixing manifolds.

- Temperature range 5÷80 °C
- Max. operating pressure 8 Bar

PATENTED

Code	Size	Ways	Box	Carton	Cat.
10020610	1"	2+2	1	1	30.01
10030610	1"	3+3	1	1	30.01
10040610	1"	4+4	1	1	30.01
10050610	1"	5+5	1	1	30.01
10060610	1"	6+6	1	1	30.01
10070610	1"	7+7	1	1	30.01
10080610	1"	8+8	1	1	30.01
10090610	1"	9+9	1	1	30.01
10100610	1"	10+10	1	1	30.01
10110610	1"	11+11	1	1	30.01
10120610	1"	12+12	1	1	30.01
10130610	1"	13+13	1	1	30.01

Centre distance connections through 50mm distribution -EUROCONUS G3/4" UNI-EN-ISO 228 threading

Supply indicator flow meters on each supply way.
Manifolds with internal cavities with thermal insulation and anti-condensation functions.
Use fittings with Euroconus G3/4" thread for pipe connection.

Warning: branch pipe fittings tightened to max torque of 30Nm.

30.01 MANIFOLDS | ANTICONDENSATION MANIFOLD KITS

Series 1002.C

Modular manifold kits in anti-condensation polymer.

Each kit contains:
n° 1 multi-way manifold unit complete with flow meters with lockshield and flow indicator function;
n° 1 multi-way manifold unit complete with valves with thermostatic option with hand wheel;
1 pair of plastic brackets for fixing manifolds;
n° 2 1" ball valves with built-in thermometer 0÷80 °C;
n° 2 union fittings;
n° 1 automatic 1" air / water discharge terminal unit.
n° 1 manual 1" air / water discharge terminal unit.

- Temperature range 5÷80 °C
- Max. operating pressure 8 Bar

PATENTED

Code	Size	Ways	Box	Carton	Cat.
10020640	1"	2+2	1	1	30.01
10030640	1"	3+3	1	1	30.01
10040640	1"	4+4	1	1	30.01
10050640	1"	5+5	1	1	30.01
10060640	1"	6+6	1	1	30.01
10070640	1"	7+7	1	1	30.01
10080640	1"	8+8	1	1	30.01
10090640	1"	9+9	1	1	30.01
10100640	1"	10+10	1	1	30.01
10110640	1"	11+11	1	1	30.01
10120640	1"	12+12	1	1	30.01
10130640	1"	13+13	1	1	30.01

Centre distance connections through 50mm distribution -EUROCONUS G3/4" UNI-EN-ISO 228 threading

Supply indicator flow meters on each supply way.
Manifolds with internal cavities with thermal insulation and anti-condensation functions.
Use RBM fittings with G3/4" Euroconus thread for pipe connection (217M.A and 224M.A series)

Warning: branch pipe fittings tightened to max torque of 30Nm.

Series 3202.B

Modular brass manifold kit with a 37mm centre-to-centre distance

BIM

Each kit contains:
n° 1 multi-way manifold unit complete with flow meters with lockshield and flow indicator function;
n° 1 multi-way manifold unit complete with valves with thermostatic option with hand wheel;
n° 1 pair of steel brackets for mounting manifolds;
n° 2 thermometers 0÷80 °C;
1 x 1" air / water automatic discharge terminal unit;
n° 1 manual 1" air / water discharge terminal unit.

- Temperature range 0÷80 °C
- Max operating pressure 10 Bar

Code	Size	Ways	Box	Carton	Cat.
32020610	1"	2+2	1	1	30.01
32030610	1"	3+3	1	1	30.01
32040610	1"	4+4	1	1	30.01
32050610	1"	5+5	1	1	30.01
32060610	1"	6+6	1	1	30.01
32070610	1"	7+7	1	1	30.01
32080610	1"	8+8	1	1	30.01
32090610	1"	9+9	1	1	30.01
32100610	1"	10+10	1	1	30.01
32110610	1"	11+11	1	1	30.01
32120610	1"	12+12	1	1	30.01
32130610	1"	13+13	1	1	30.01
32140610	1"	14+14	1	1	30.01

Centre distance between connections via distribution manifolds 37 mm - threading Standard RBM W24,5x19F

Manifold kit can be fix on in walls in 8 cm box.
Made up of flow meter supply indicator on each supply way.
Use fittings with RBM Standard thread for pipe connection.
Set up RBM Series 3189 thermo-electric actuators to automatically shut off the single circuits.

Series 3201.C

Modular brass complete with valves with thermostatic option and manual handwheel.

BIM

- Temperature range 0 ÷ 100 °C
- Max operating pressure 10 Bar

Code	Size	Ways	Box	Carton	Cat.
32010630	1"	1	1	10	30.01
32020630	1"	2	1	10	30.01
32030630	1"	3	1	10	30.01
32040630	1"	4	1	10	30.01
32050630	1"	5	1	10	30.01

Centre distance between connections via distribution manifolds 37 mm - threading Standard RBM W24,5x19F

Use fittings with RBM Standard thread for pipe connection.
Available 3674 series thermal insulation shell accessory.
Use thermo-electric actuator series 3189.

Series 3248

Pair of steel brackets with collar for the aligned fixing of the series 3201 - 3202 brass modular manifolds.

Code	Box	Carton	Cat.
32480600	1	10	30.01

Suitable with RBM series 2606 and series 3834R manifold cabinet.
Provided as standard in 3202 series modular brass manifolds kits.

Series 3201.A

Modular manifold, complete with flow meters, with lockshield and flow indicator function.

- Temperature range 0 ÷ 80 °C
- Max operating pressure 10 Bar

Code	Size	Ways	Box	Carton	Cat.
32010600	1"	1	1	10	30.01
32020600	1"	2	1	10	30.01
32030600	1"	3	1	10	30.01
32040600	1"	4	1	10	30.01
32050600	1"	5	1	10	30.01

Centre distance between connections via distribution manifolds 37 mm - threading Standard RBM W24,5x19F

Use fittings with RBM Standard thread for pipe connection.
Available 3674 series thermal insulation shell accessory.

Series 8647

Thermometer for 3615, 3201, 3202 series manifold kit

- Thermometer scale 0 ÷ 80°C

Code	Box	Carton	Cat.
08647005	1	1	30.01

30.01 MANIFOLDS | MODULAR BRASS MANIFOLD KIT

Series 3201.B

Modular manifold complete with micrometric lockshield regulating valves with graduated handwheel.

- Temperature range 0 ÷ 100 °C
- Max operating pressure 10 Bar

Code	Size	Ways	Box	Carton	Cat.
32010620	1"	1	1	10	30.01
32020620	1"	2	1	10	30.01
32030620	1"	3	1	10	30.01
32040620	1"	4	1	10	30.01
32050620	1"	5	1	10	30.01

Centre distance between connections via distribution manifolds 37 mm - threading Standard RBM W24,5x19F

Use fittings with RBM Standard thread for pipe connection.
Available 3674 series thermal insulation shell accessory.

30.01 MANIFOLDS | MODULAR BRASS MANIFOLD KIT

KILMA-ZONE

Series 3615R

Multi-zone brass modular manifolds kit.

- Temperature range 0÷80 °C
- Max operating pressure 10 Bar

- Each kit contains:
- n° 1 multi-way manifold unit complete with flow meters with lockshield and flow indicator function;
- n° 1 pair of steel brackets for mounting manifolds;
- n° 2 thermometers 0÷80 °C;
- 1 x 1" air / water automatic discharge terminal unit;
- n° 1 manual 1" air / water discharge terminal unit.

Code	Size	Ways	Box	Cat.
3615R0300	1"	3+3	1	30.01
3615R0400	1"	4+4	1	30.01
3615R0500	1"	5+5	1	30.01
3615R0600	1"	6+6	1	30.01
3615R0700	1"	7+7	1	30.01
3615R0800	1"	8+8	1	30.01
3615R0900	1"	9+9	1	30.01
3615R1000	1"	10+10	1	30.01
3615R1100	1"	11+11	1	30.01
3615R1200	1"	12+12	1	30.01
3615R1300	1"	13+13	1	30.01
3615R1400	1"	14+14	1	30.01

Centre distance between connections via distribution manifolds 37 mm - threading Standard RBM W24,5x19F

Manifold kit can be fix on in walls in 8 cm box.
Flow meter supply indicator on each supply way.
Use fittings with RBM Standard thread for pipe connection.
Provide 306 series electrothermal servocontrols for automatic shut-off of individual circuits.
Provide manifold with 3616 series thermostatically controlled valves (mandatory completion accessory to be chosen according to circuit management configuration).

Series 3215

Air and water automatic discharge terminal.

Standard installation on the delivery line of modular brass manifold kits.

- Pressure gauge holder connection G 1/8" (for RBM Ø 40 radial pressure gauge - scale 0 ÷ 16 bar - Code 7469.005)

Code	Size	Box	Carton	Cat.
32150650	1"	1	10	30.01

Pressure gauge holder connection G 1/8" (for RBM Ø 40 radial pressure gauge - scale 0 ÷ 16 bar - Code 7469.005)
Available thermal insulation shell accessory cod. 3672.00.02

Series 3216

Air and water manual discharge terminal.

Standard installation on return line of modular brass manifold kits.

- Pressure gauge holder connection G 1/8" (for RBM Ø 40 radial pressure gauge - scale 0 ÷ 16 bar - Code 7469.005)

Code	Size	Box	Carton	Cat.
32160650	1"	1	10	30.01

Pressure gauge holder connection G 1/8" (for RBM Ø 40 radial pressure gauge - scale 0 ÷ 16 bar - Code 7469.005)
Available thermal insulation shell accessory cod. 3674.10.02

Series 3217

By-pass group with rotatable elbow fittings for the system filling.

It consists of (loose pieces) :
Automatic air vent;
By-pass adjustment group;
Fittings and connection pipe.

- Pressure gauge holder connection G 1/8" (for RBM ø 40 axial pressure gauge - scale 0 ÷ 10 bar - Code 832.005)

Code	Size	Box	Carton	Cat.
32170600	1"	1	10	30.01

It allows for by-pass fixed adjustment.

Series 3672.A

Insulation shell for manual air and water discharge terminal unit series 3216 made of expanded polyethylene half-bearings with external anti-scratch coating.

Half-bearings fixed with double-sided adhesive tape already applied.

- Max temperature application -40°C ÷ +90 °C
- Fire behaviour class I
- Density 33 Kg/m³

Code	Box	Carton	Cat.
36721002	1	1	30.01

Series 3672.B

Insulation shell for series 3215 automatic air and water discharge terminal unit, consisting of polyethylene foam half shells with scratch-resistant film outer coating.

Half-bearings fixed with double-sided adhesive tape already applied.

- Max temperature application -40°C ÷ +90 °C
- Fire behaviour class I
- Density 33 Kg/m³

Code	Box	Carton	Cat.
36720002	1	1	30.01

Series 3673

Insulation shell for modular brass manifold with thermostatically-controlled valve series 3616, made of expanded polyethylene half-bearings with external anti-scratch coating.

Half-bearings fixed with double-sided adhesive tape already applied.

- Max temperature application -40°C ÷ +90 °C
- Fire behaviour class I
- Density 33 Kg/m³

Code	Ways	Box	Carton	Cat.
36731002	1	1	1	30.01
36732002	2	1	1	30.01
36733002	3	1	1	30.01
36734002	4	1	1	30.01
36735002	5	1	1	30.01

Insulation can be combined with 3616 series manifold.

Series 3674

Insulation shell for manifold with flow meters or manifold with micrometric lockshield valves, made of expanded polyethylene half-bearings with external anti-scratch coating.

Half-bearings fixed with double-sided adhesive tape already applied.

- Max temperature application -40°C ÷ +90 °C
- Fire behaviour class I
- Density 33 Kg/m³

Code	Ways	Box	Carton	Cat.
36741002	1	1	1	30.01
36742002	2	1	1	30.01
36743002	3	1	1	30.01
36744002	4	1	1	30.01
36745002	5	1	1	30.01

MANIFOLD/HOUSING BOX COUPLING

COMPOSITION WITH RELIEF VALVES

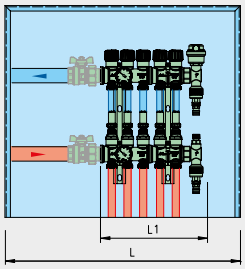

MODULAR BRASS MANIFOLDS WITH RELIEF VALVE **series 3202**												
2	3	4	5	6	7	8	9	10	11	12	13	14
L1 (mm) 133	L1 (mm) 170	L1 (mm) 207	L1 (mm) 247	L1 (mm) 284	L1 (mm) 321	L1 (mm) 358	L1 (mm) 398	L1 (mm) 435	L1 (mm) 472	L1 (mm) 509	L1 (mm) 549	L1 (mm) 586
BOX L=400 Code **2606.40.02** Code **3834R.40.12** Code **4124.40.00**				BOX L=600 Code **2606.60.02** Code **3834R.60.12** Code **4124.60.00**						HOUSING BOX L=800 Code **2606.80.02** Code **3834R.80.12** Code **4124.80.00**		
BOX L=550 Code **1972.55.00**								BOX L=700 Code **1972.70.00**				

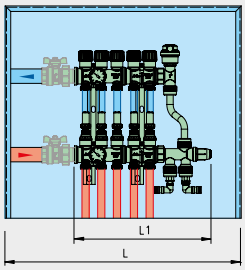

MODULAR BRASS MANIFOLDS WITH BY-PASS **series 3202**												
2	3	4	5	6	7	8	9	10	11	12	13	14
L1 (mm) 208	L1 (mm) 245	L1 (mm) 282	L1 (mm) 322	L1 (mm) 359	L1 (mm) 396	L1 (mm) 433	L1 (mm) 473	L1 (mm) 510	L1 (mm) 547	L1 (mm) 584	L1 (mm) 624	L1 (mm) 661
BOX L=400 Code **2606.40.02** Code **3834R.40.12** Code **4124.40.00**		BOX L=600 Code **2606.60.02** Code **3834R.60.12** Code **4124.60.00**					HOUSING BOX L=800 Code **2606.80.02** Code **3834R.80.12** Code **4124.80.00**					
BOX L=550 Code **1972.55.00**								BOX L=700 Code **1972.70.00**				

80 mm clearance was already considered for the installation of an accessory shut-off valve to define the coupling of the manifolds/housing boxes kit.

GUIDE TO THE CHOICE OF INSULATING CASING FOR MANIFOLD KIT SERIES 3202

The choice of insulating casings to insulate the manifold kit must be carried out according to the precise configuration of the single modules that comprise the delivery and return manifold kit. Refer to the table below for the correct codes to order.

No. of manifold kit branches	Module composition	Supply and return manifold insulation codes	Drain units insulation codes
3	3	3674.30.02 (2 pcs)	3672.00.02 + 3672.10.02
4	4	3674.40.02 (2 pcs)	3672.00.02 + 3672.10.02
5	5	3674.50.02 (2 pcs)	3672.00.02 + 3672.10.02
6	3+3	3674.30.02 (4 pcs)	3672.00.02 + 3672.10.02
7	3+4	3674.30.02 (2 pcs) + 3674.40.02 (2 pcs)	3672.00.02 + 3672.10.02
8	4+4	3674.40.02 (4 pcs)	3672.00.02 + 3672.10.02
9	5+4	3674.50.02 (2 pcs) + 3674.40.02 (2 pcs)	3672.00.02 + 3672.10.02
10	5+5	3674.50.02 (4pcs)	3672.00.02 + 3672.10.02
11	3+4+4	3674.30.02 (2 pcs) + 3674.40.02 (4 pcs)	3672.00.02 + 3672.10.02
12	4+4+4	3674.40.02 (6 pcs)	3672.00.02 + 3672.10.02
13	5+4+4	3674.50.02 (2 pcs) + 3674.40.02 (4 pcs)	3672.00.02 + 3672.10.02
14	5+5+4	3674.50.02 (4 pcs) + 3674.40.02 (2 pcs)	3672.00.02 + 3672.10.02

30. RADIANT CLIMATE CONTROL SYSTEMS

30.02 MIXING AND DISTRIBUTION UNITS

Mixing and distribution units

Kilma Basic 2 mixing unit

Kilma Easy 2 mixing unit

KILMA-EVO-RM-AT

Series 782.A

Climate mixing unit Kilma-EVO-RM AT series.

Mixing and distribution unit for low and high temperature circuits, comprised of: H.T. manifold, circulation pump, manifold recirculation by-pass and mixing unit in-one; modulating adjustment using injection unit with servomotor, electronic climatic control unit, safety thermostat, external probe, immersed internal probe (low temperature delivery).

- System side connection centre distance 90 mm, G 3/4" ball valve connections.
- Centre distance of connections on the diverter line of the high temperature manifold 45 mm, Euroconus G 3/4" threaded connections

Code	Pump	Box	Carton	Cat.
07820651	Para 15/7 SC 130	1	1	30.02

High performance adjustable flow pump EEI<0.23 - ERP 622/2012

Use RBM fittings with G 3/4" Euroconus thread (see p. 373) to connect the pipe to the H.T. manifold.
For matching manifolds, please refer to the Manifolds category in the RBM catalogue. Provide for assemblies without ball shut-off valves.
Minimum recessed depth of the accessory containment metal case 130 mm.

KILMA-EVO-RF-AT

Series 782.B

Fixed Point mixing unit Kilma-EVO-RF AT series.

Mixing and distribution unit for low and high temperature circuits, comprised of: H.T. manifold, circulation pump, manifold recirculation by-pass and mixing unit in-one; fixed value adjustment, using injection valve with thermostatic head with internal probe (low temperature delivery), immersed safety thermostat.

- System side connection centre distance 90 mm, G 3/4" ball valve connections.
- Centre distance of connections on the diverter line of the high temperature manifold 45 mm, Euroconus G 3/4" threaded connections

Code	Pump	Box	Carton	Cat.
07820661	Para 15/7 SC 130	1	1	30.02

high performance adjustable flow pump EEI<0.23 - ERP 622/2012

Use RBM fittings with G 3/4" Euroconus thread (see p. 373) to connect the pipe to the H.T. manifold.
For matching manifolds, please refer to the Manifolds category in the RBM catalogue. Provide for assemblies without ball shut-off valves.
Minimum recessed depth of the accessory containment metal case 130 mm.

KILMA-ECO-RF-AT

Series 701.A

Fixed Point mixing unit Kilma-ECONBLOCK RF-AT series.

Mixing and distribution unit for low and high temperature circuits, comprised of: H.T. manifold, circulation pump, mixing manifold, including non-return valve and control return unit; fixed value adjustment using injection valve with thermostatic head with internal probe (low temperature delivery), immersed safety thermostat.

- System side connection centre distance 90 mm, G 3/4" ball valve connections.
- Centre distance of connections on the diverter line of the high temperature manifold 45 mm, Euroconus G 3/4" threaded connections

Code	Pump	Box	Carton	Cat.
07010661	Para 15/7 SC 130	1	1	30.02

high performance adjustable flow pump EEI<0.23 - ERP 622/2012

Use fittings with Standard RBM thread (see pg. 300) to connect the pipe to the H.T. manifold.
For combinable manifolds, refer to the Manifolds category of this catalog (see p. 294). Provide for assemblies without ball shut-off valves.
Minimum recessed depth of the accessory containment metal case 130 mm.

KILMA-ECO-RF-AT POLYMER

Series 1531.A

Fixed Point mixing unit Kilma-ECONBLOCK RF-AT series in Polymer.

Mixing and distribution unit for low and high temperature circuits, comprised of: H.T. manifold, circulation pump, mixing manifold, including non-return valve and control return unit; fixed value adjustment using injection valve with thermostatic head with internal probe (low temperature delivery), immersed safety thermostat.

- System side connection centre distance 111 mm, G 3/4" ball valve connections.
- Centre distance between outlet connections for high temperature 37 mm, Standard threaded RBM connections

Code	Pump	Box	Carton	Cat.
15310671	Para 15/7 SC 130	1	1	30.02

high performance adjustable flow pump EEI<0.23 - ERP 622/2012

Use fittings with Standard RBM thread (see pg. 300) to connect the pipe to the H.T. manifold.
For combinable manifolds, refer to the Manifolds category of this catalog (see p. 294). Provide for assemblies without ball shut-off valves.
Minimum recessed depth of the accessory containment metal case 130 mm.

Warning: branch pipe fittings tightened to max torque of 30Nm.

KILMA-EVO-RM

Series 770.A

Climate mixing unit Kilma-EVO-RM series.

Mixing and distribution unit for low temperature circuits, comprised of: circulation pump, manifold recirculation by-pass, boiler recirculation by-pass and mixing unit in-one; modulating adjustment using injection unit with servomotor, electronic climatic control unit, safety thermostat, external probe, immersed internal probe (low temperature delivery).

- System side connection centre distance 111 mm, G 3/4" ball valve connections and thermostatic mixer.

Code	Pump	Box	Carton	Cat.
07700651	Para 15/7 SC 130	1	1	30.02

high performance adjustable flow pump EEI<0.23 - ERP 622/2012

For combinable manifolds, refer to the Manifolds category of this catalog (see p. 294). Provide for assemblies without ball shut-off valves. Minimum recessed depth of the accessory containment metal case 130 mm.

KILMA-EVO-RF

Series 770.B

Fixed Point mixing unit Kilma-EVO-RF series.

Mixing and distribution unit for low temperature circuits, comprised of: circulation pump, manifold recirculation by-pass, boiler recirculation by-pass and mixing unit in-one; fixed value adjustment using injection valve with thermostatic head with internal probe (low temperature delivery) immersed safety thermostat.

- System side connection centre distance 111 mm, G 3/4" ball valve connections and thermostatic mixer.

Code	Pump	Box	Carton	Cat.
07700661	Para 15/7 SC 130	1	1	30.02

high performance adjustable flow pump EEI<0.23 - ERP 622/2012

For combinable manifolds, refer to the Manifolds category of this catalog (see p. 294). Provide for assemblies without ball shut-off valves. Minimum recessed depth of the accessory containment metal case 130 mm.

KILMA-ECO-RF

Series 701.B

Fixed Point mixing unit Kilma-ECONBLOCK RF series.

Mixing and distribution unit for low temperature circuits, comprised of: circulation pump, mixing manifold, including non-return valve and control return unit; fixed value adjustment using injection valve with thermostatic head with internal probe (low temperature delivery), immersed safety thermostat.

- System side connection centre distance 111 mm, G 1/2" F connections.

Code	Pump	Box	Carton	Cat.
07010651	Para 15/7 SC 130	1	1	30.02

high performance adjustable flow pump EEI<0.23 - ERP 622/2012

For combinable manifolds, see the Manifolds category of this catalog (see p. ___. 294). Provide for assemblies without ball shut-off valves. Minimum recessed depth of the accessory containment metal case 130 mm.

KILMA-ECO-RF POLYMER

Series 1531.B

Fixed Point mixing unit Kilma-ECONBLOCK RF series in Polymer.

Mixing and distribution unit for low temperature circuits, comprised of: circulation pump, mixing manifold, including non-return valve and control return unit; fixed value adjustment using injection valve with thermostatic head with internal probe (low temperature delivery), immersed safety thermostat.

- System side connection centre distance 111 mm, G 1/2" M connections.

Code	Pump	Box	Carton	Cat.
15310651	Para 15/7 SC 130	1	1	30.02

high performance adjustable flow pump EEI<0.23 - ERP 622/2012

For combinable manifolds, consult the category Manifolds i of this catalog (see p. 294). Provide for assemblies without ball shut-off valves. Minimum recessed depth of the accessory containment metal case 130 mm.

Series 3523

Kilma-ECOMIX RF series Fixed Point mixing unit.

Mixing and distribution unit for low temperature circuits consisting of: circulation pump and thermostatic mixer.

- G 1" M system side connections.

ECOMIX RF 50 mixing unit

Code	Pump	Box	Carton	Cat.
35230651	Para 15/7 SC 130	1	1	30.02

high performance adjustable flow pump EEI<0.23 - ERP 622/2012
To be matched to manifolds with a 50 mm centre distance (see page 294)

ECOMIX RF 37 mixing unit

Code	Pump	Box	Carton	Cat.
35230637	Para 15/7 SC 130	1	1	30.02

high performance adjustable flow pump EEI<0.23 - ERP 622/2012
To be matched to manifolds with a 37 mm centre distance (series 3615 and 3202)

For combinable manifolds, refer to the Manifolds category of this catalog (see p. 294). Provide for assemblies without ball shut-off valves. Minimum recessed depth of the accessory containment metal case 130 mm.

KILMA-EVO-RM2

Series 782.C

Climate Control Unit Kilma-Evo-RM2 series

Distribution unit for low and high temperature circuits consisting of: specific manifolds, circulation pump and mixing unit integrated together: modulating adjustment by means of injection unit with actuator, electronic climate mixing unit, safety thermostat, external probe, internal probe (low temperature delivery) with well, all housed in a recessed metal cabinet with locking hatch; Including: supply control flow meters, thermostatically controlled valves on the return line, 1 automatic air vent valve/degasser, equipped with connection for system filling, 1 air manual discharge unit, system loading 2 shut-off ball valves, thermometers for reading delivery and return temperatures.

- Centre distance between attachments on the plant side 90 mm.
- Centre distance of connections on the diverter line of the high temperature manifold 45 mm, Euroconus G 3/4" threaded connections
- Centre distance of connections on the diverter line of the low temperature manifold 50 mm, Euroconus G 3/4" threaded connections

KILMA EVO-RM2

Code	Size	Ways	Width (mm)	Height (mm)	Box	Carton	Cat.
07820680	1"	3+3	800	700÷820	1	1	30.02
07830680	1"	4+4	800	700÷820	1	1	30.02
07840680	1"	5+5	800	700÷820	1	1	30.02
07850680	1"	6+6	800	700÷820	1	1	30.02
07860680	1"	7+7	1000	700÷820	1	1	30.02
07870680	1"	8+8	1000	700÷820	1	1	30.02
07880680	1"	9+9	1000	700÷820	1	1	30.02
07890680	1"	10+10	1200	700÷820	1	1	30.02
07900680	1"	11+11	1200	700÷820	1	1	30.02
07901280	1"	12+12	1200	700÷820	1	1	30.02
07901380	1"	13+13	1200	700÷820	1	1	30.02

high performance adjustable flow pump EEI<0.23 - ERP 622/2012
Available version is equipped with 3-way H.T. distribution manifold with thermostatically controlled valves and lockshield regulating valves. Ordering code becomes 1xxx.xx.xx (request price).
Cabinet depth 110÷160 mm

Insulation casing

Code	Box	Carton	Cat.
37050002*	1	1	30.02
37050012**	1	1	30.02

* Specific insulation casing for mixing valve, circulator and well
** Specific insulation casing for H.T. manifold.

The cabinet size enables installation of the Bypass unit code 910.06.00
Use RBM fittings with Euroconus G3/4" thread for connection to the H.T. manifold.
Use RBM fittings with G 3/4" Euroconus thread (see p. 373) to connect the pipe to the L.T. manifold.

KILMA-EVO-RF2

Series 782.D

Fixed Point Control Unit Kilma-Evo-RF2 series

Control unit for low and high temperature circuits consisting of: Specific manifolds, circulation pump and injection unit integrated together; fixed value adjustment, by means of injection valve with thermostatic head, internal probe (low temperature delivery), safety thermostat with well, all housed in a recessed metal cabinet with locking hatch; Including: supply control flow meters, thermostatically controlled valves on the return line, 1 automatic air vent valve / degasser, equipped with connections for system filling, 1 air manual discharge unit, system loading, 2 shut-off ball valves, thermometers for reading delivery and return temperatures.

- Centre distance between attachments on the plant side 90 mm.
- Centre distance of connections on the diverter line of the high temperature manifold 45 mm, Euroconus G 3/4" threaded connections
- Centre distance of connections on the diverter line of the low temperature manifold 50 mm, Euroconus G 3/4" threaded connections

KILMA EVO-RF2

Code	Size	Ways	Width (mm)	Height (mm)	Box	Carton	Cat.
07820690	1"	3+3	800	700÷820	1	1	30.02
07830690	1"	4+4	800	700÷820	1	1	30.02
07840690	1"	5+5	800	700÷820	1	1	30.02
07850690	1"	6+6	800	700÷820	1	1	30.02
07860690	1"	7+7	1000	700÷820	1	1	30.02
07870690	1"	8+8	1000	700÷820	1	1	30.02
07880690	1"	9+9	1000	700÷820	1	1	30.02
07890690	1"	10+10	1000	700÷820	1	1	30.02
07900690	1"	11+11	1200	700÷820	1	1	30.02
07901290	1"	12+12	1200	700÷820	1	1	30.02
07901390	1"	13+13	1200	700÷820	1	1	30.02

high performance adjustable flow pump EEI<0.23 - ERP 622/2012
Available version is equipped with 3-way H.T. distribution manifold with valves with thermostatic capacity and lockshield regulating valves. Order code becomes 1xxx.xx.xx .
Cabinet depth 110÷160 mm

Insulation casing

Code	Box	Carton	Cat.
37050002*	1	1	30.02
37050012**	1	1	30.02

* Specific insulation casing for mixing valve, circulator and well
** Specific insulation casing for H.T. manifold.

The dimensions of the cabinet allow the installation of the By-pass assembly code 09100600
Use RBM fittings with Euroconus G3/4" thread for connection to the H.T. manifold.
Use Euroconus fittings with G 3/4" thread (see page 373) to connect the pipe to the L.T. manifold.

KILMA-EVO-RM4

Series 770.C

Climate Control Unit Kilma-Evo-RM4 series

Control distribution unit for low temperature circuits consisting of: specific manifolds, circulation pump, boiler recirculating by-pass and mixing unit integrated together: modulating regulation by means of injection unit with actuator, electronic climate control unit, safety thermostat, external probe, internal probe (low temperature delivery) with well, all housed in a recessed metal cabinet with locking hatch; Including: supply control flow meters, thermostatically controlled valves on the return line, 1 automatic air vent valve/ degasser, equipped with connection for system filling, 1 air manual discharge unit, system loading, 2 shut-off ball valves, thermometers for reading delivery and return temperatures.

- Centre distance between attachments on the plant side 111 mm.
- Centre distance of connections on the diverter line of the low temperature manifold 50 mm, Euroconus G 3/4" threaded connections

Kilma EVO-RM4

Code	Size	Ways	Width (mm)	Height (mm)	Box	Carton	Cat.
07700680	1"	3+3	800	700÷820	1	1	30.02
07710680	1"	4+4	800	700÷820	1	1	30.02
07720680	1"	5+5	800	700÷820	1	1	30.02
07730680	1"	6+6	800	700÷820	1	1	30.02
07740680	1"	7+7	1000	700÷820	1	1	30.02
07750680	1"	8+8	1000	700÷820	1	1	30.02
07760680	1"	9+9	1000	700÷820	1	1	30.02
07770680	1"	10+10	1000	700÷820	1	1	30.02
07780680	1"	11+11	1200	700÷820	1	1	30.02
07781280	1"	12+12	1200	700÷820	1	1	30.02
07781380	1"	13+13	1200	700÷820	1	1	30.02

high performance adjustable flow pump EEI<0.23 - ERP 622/2012
Cabinet depth 110÷160 mm

Insulation casing

Code	Box	Carton	Cat.
37050002*	1	1	30.02

* Specific insulation casing for mixing valve, circulator and well

The dimensions of the cabinet allow the installation of the By-pass assembly code 09100600
Use Euroconus fittings with G 3/4" thread (see page 373) to connect the pipe to the L.T. manifold.

KILMA-EVO-RF4

Series 770.D

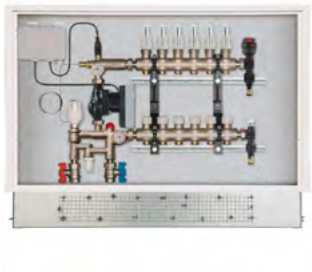

Fixed Point Control Unit Kilma-EVO-RF4 series

Control unit for low temperature circuits consisting of: Specific manifolds, circulation pump and injection unit integrated together; fixed value adjustment, by means of injection valve with thermostatic head, internal probe (low temperature delivery), safety thermostat with well, all housed in a recessed metal cabinet with locking hatch; Including: supply control flow meters, thermostatically controlled valves on the return line, 1 automatic air vent valve / degasser, equipped with connections for system filling, 1 air manual discharge unit, system loading, 2 shut-off ball valves, thermometers for reading delivery and return temperatures.

- Centre distance between attachments on the plant side 111 mm.
- Centre distance of connections on the diverter line of the low temperature manifold 50 mm, Euroconus G 3/4" threaded connections

KILMA-EVO-RF4

Code	Size	Ways	Width (mm)	Height (mm)	Box	Carton	Cat.
07700690	1"	3+3	800	700÷820	1	1	30.02
07710690	1"	4+4	800	700÷820	1	1	30.02
07720690	1"	5+5	800	700÷820	1	1	30.02
07730690	1"	6+6	800	700÷820	1	1	30.02
07740690	1"	7+7	1000	700÷820	1	1	30.02
07750690	1"	8+8	1000	700÷820	1	1	30.02
07760690	1"	9+9	1000	700÷820	1	1	30.02
07770690	1"	10+10	1000	700÷820	1	1	30.02
07780690	1"	11+11	1200	700÷820	1	1	30.02
07781290	1"	12+12	1200	700÷820	1	1	30.02
07781390	1"	13+13	1200	700÷820	1	1	30.02

High performance adjustable flow pump EEI<0.23 - ERP 622/2012
Cabinet depth 110÷160 mm

Insulation casing

Code	Box	Carton	Cat.
37050002*	1	1	30.02

* Specific insulation casing for mixing valve, circulator and well

The dimensions of the cabinet allow the installation of the By-pass assembly code 09100600
Use Euroconus fittings with G 3/4" thread (see page 373) to connect the pipe to the L.T. manifold.

KILMA-ECONBLOCK RF

Series 701.C

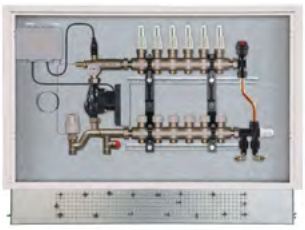

Fixed Point control unit Kilma-ECONBLOCK RF series

Distribution control unit for low temperature circuits consisting of: specific manifolds, circulation pump, mixing manifold, including non-return valve and control return unit; fixed point control through injection valve with thermostatic head internal probe (low temperature flow), immersion safety thermostat, all housed in a built-in metal cabinet with locking hatch. Including: flow control meters, flow thermometer, valves with thermostatic option on return, 1 automatic air vent valve / air separator valve, adjustable by-pass valve equipped with connections for system filling.
Model recommended for use with electrothermic heads.

- Centre distance between attachments on the plant side 111 mm.
- Centre distance of connections on the diverter line of the low temperature manifold 50 mm, Euroconus G 3/4" threaded connections

Code	Size	Ways	Width (mm)	Height (mm)	Box	Carton	Cat.
07010650	1"	3+3	800	700÷820	1	1	30.02
07020650	1"	4+4	800	700÷820	1	1	30.02
07030650	1"	5+5	800	700÷820	1	1	30.02
07040650	1"	6+6	800	700÷820	1	1	30.02
07050650	1"	7+7	1000	700÷820	1	1	30.02
07060650	1"	8+8	1000	700÷820	1	1	30.02
07070650	1"	9+9	1000	700÷820	1	1	30.02
07080650	1"	10+10	1200	700÷820	1	1	30.02
07090650	1"	11+11	1200	700÷820	1	1	30.02
07091250	1"	12+12	1200	700÷820	1	1	30.02

high performance adjustable flow pump EEI<0.23 - ERP 622/2012
Cabinet depth 110÷160 mm

Use Euroconus fittings with G 3/4" thread (see page 373) to connect the pipe to the L.T. manifold.

KILMA-ECONBLOCK RF-AT

Series 701.D

Fixed Point control unit Kilma-ECONBLOCK RF-AT series

Distribution control unit for low and high temperature circuits consisting of: specific manifolds, circulation pump, mixing manifold, including non-return valve and control return unit; fixed point control through injection valve with thermostatic head internal probe (low temperature flow), immersion safety thermostat, all housed in a built-in metal cabinet with locking hatch. Including: supply control flow meters, delivery thermometer, valves with thermostatic option on return,, 1 automatic air vent valve / air separator valve, adjustable by-pass unit equipped with connections for system filling, 2 shut-off ball valves. Model recommended for use with electrothermic heads.

- Centre distance between attachments on the plant side 90 mm.
- Centre distance of connections on the diverter line of the high temperature manifold 45 mm, Euroconus G 3/4" threaded connections
- Centre distance of connections on the diverter line of the low temperature manifold 50 mm, Euroconus G 3/4" threaded connections

Code	Size	Ways	Width (mm)	Height (mm)	Box	Carton	Cat.
07010660	1"	3+3	800	700÷820	1	1	30.02
07020660	1"	4+4	800	700÷820	1	1	30.02
07030660	1"	5+5	800	700÷820	1	1	30.02
07040660	1"	6+6	800	700÷820	1	1	30.02
07050660	1"	7+7	1000	700÷820	1	1	30.02
07060660	1"	8+8	1000	700÷820	1	1	30.02
07070660	1"	9+9	1000	700÷820	1	1	30.02
07080660	1"	10+10	1200	700÷820	1	1	30.02
07090660	1"	11+11	1200	700÷820	1	1	30.02
07091260	1"	12+12	1200	700÷820	1	1	30.02

high performance adjustable flow pump EEI<0.23 - ERP 622/2012
Available version is equipped with 3-way H.T. distribution manifold with thermostatically controlled valves and lockshield regulating valves. Ordering code becomes 1xxx.xx.xx (request price).
Cabinet depth 110÷160 mm

Use Euroconus fittings with G 3/4" thread (see page 373) to connect the pipe to the H.T. manifold.
Use Euroconus fittings with G 3/4" thread (see page 373) to connect the pipe to the L.T. manifold.

KILMA-ECONBLOCK RF POLYMER

Series 1531.C

Fixed Point control unit Kilma-ECONBLOCK RF series in Polymer

Distribution control unit for low temperature circuits consisting of: specific manifolds, circulation pump, mixing manifold, including non-return valve and control return unit; fixed point control through injection valve with thermostatic head internal probe (low temperature flow), immersion safety thermostat, all housed in a built-in metal cabinet with locking hatch. Including: flow control meters, flow thermometer, valves with thermostatic option on return, 1 automatic air vent valve / air separator valve, adjustable by-pass valve equipped with connections for system filling.
Model recommended for use with electrothermic heads.

- Centre distance between attachments on the plant side 111 mm.
- Centre distance of connections on the diverter line of the low temperature manifold 50 mm, Euroconus G 3/4" threaded connections

Code	Size	Ways	Width (mm)	Height (mm)	Box	Carton	Cat.
15310650	1"	3+3	800	700÷820	1	1	30.02
15320650	1"	4+4	800	700÷820	1	1	30.02
15330650	1"	5+5	800	700÷820	1	1	30.02
15340650	1"	6+6	800	700÷820	1	1	30.02
15350650	1"	7+7	1000	700÷820	1	1	30.02
15360650	1"	8+8	1000	700÷820	1	1	30.02
15370650	1"	9+9	1000	700÷820	1	1	30.02
15380650	1"	10+10	1200	700÷820	1	1	30.02
15390650	1"	11+11	1200	700÷820	1	1	30.02
15400650	1"	12+12	1200	700÷820	1	1	30.02

high performance adjustable flow pump EEI<0.23 - ERP 622/2012
Cabinet depth 120÷160 mm

Use Euroconus fittings with G 3/4" thread (see page 373) to connect the pipe to the L.T. manifold.

Warning: branch pipe fittings tightened to max torque of 30Nm.

KILMA-ECONBLOCK RF-AT POLYMER

Series 1531.D

Fixed Point control unit Kilma-ECONBLOCK RF-AT series in Polymer

Distribution control unit for low and high temperature circuits consisting of: specific manifolds, circulation pump, mixing manifold, including non-return valve and control return unit; fixed point control through injection valve with thermostatic head internal probe (low temperature flow), immersion safety thermostat, all housed in a built-in metal cabinet with locking hatch. Including: supply control flow meters, delivery thermometer, thermostatic valves on return, 1 automatic air vent valve / air separator valve, adjustable by-pass unit equipped with connections for system filling, 2 shut-off ball valves.
Model recommended for use with electrothermic heads.

- Centre distance between attachments on the plant side 111 mm.
- Centre distance between outlet connections for high temperature 37 mm, Standard threaded RBM connections
- Centre distance of connections on the diverter line of the low temperature manifold 50 mm, Euroconus G 3/4" threaded connections

Code	Size	Ways	Width (mm)	Height (mm)	Box	Carton	Cat.
15310670	1"	3+3	800	700÷820	1	1	30.02
15320670	1"	4+4	800	700÷820	1	1	30.02
15330670	1"	5+5	800	700÷820	1	1	30.02
15340670	1"	6+6	800	700÷820	1	1	30.02
15350670	1"	7+7	1000	700÷820	1	1	30.02
15360670	1"	8+8	1000	700÷820	1	1	30.02
15370670	1"	9+9	1000	700÷820	1	1	30.02
15380670	1"	10+10	1200	700÷820	1	1	30.02
15390670	1"	11+11	1200	700÷820	1	1	30.02
15400670	1"	12+12	1200	700÷820	1	1	30.02

high performance adjustable flow pump EEI<0.23 - ERP 622/2012
Cabinet depth 130÷160 mm

Use fittings with Standard RBM thread (see p. 373) to connect the pipe to the H.T. manifold.
Use Euroconus fittings with G 3/4" thread (see page 373) to connect the pipe to the L.T. manifold.

Warning: branch pipe fittings tightened to max torque of 30Nm.

KILMA-ECOMIX-RF

Series 3524

Kilma-ECOMIX RF series Fixed Point control unit

Distribution unit for low temperature circuits consisting of: specific manifolds, circulation pump, thermostatic mixer, all placed in a metal cabinet with door designed for recessed installation. Includes: delivery control flowmeters, valves with thermostatic option on return, 1 automatic air vent/degasser valve fitted with a connection to fill the system and 1 air discharge manual unit.

- G 1" system side connections
- Centre distance of connections on the diverter line of the low temperature manifold 50 mm, Euroconus G 3/4" threaded connections

Code	Size	Ways	Width (mm)	Height (mm)	Box	Carton	Cat.
35240690	1"	3+3	800	700÷820	1	1	30.02
35250690	1"	4+4	800	700÷820	1	1	30.02
35260690	1"	5+5	800	700÷820	1	1	30.02
35270690	1"	6+6	800	700÷820	1	1	30.02
35280690	1"	7+7	1000	700÷820	1	1	30.02
35290690	1"	8+8	1000	700÷820	1	1	30.02
35300690	1"	9+9	1000	700÷820	1	1	30.02
35310690	1"	10+10	1000	700÷820	1	1	30.02
35320690	1"	11+11	1200	700÷820	1	1	30.02
35330690	1"	12+12	1200	700÷820	1	1	30.02

high performance adjustable flow pump EEI<0.23 - ERP 622/2012
Cabinet depth 130÷160 mm

Use Euroconus fittings with G 3/4" thread (see page 373) to connect the pipe to the L.T. manifold.

KILMA-EKONPAKT

Series 941

Fixed Point Control Unit Kilma-EKONPAKT series.

Distribution control unit for low temperature circuits consisting of mixing manifold including:
fixed-point setting unit b means of injection valve with thermostatic head internal immersion probe, air vent valve, safety thermostat, circulation pump, non return valve, circuit control unit, assembly of motorized shut-off valves on the return.

Code	Pump	Box	Carton	Cat.
09410560	Para 15/7 SC 130	1	1	30.02

Centre distance between attachments on the plant side 111 mm.
high performance adjustable flow pump EEI<0.23 - ERP 622/2012

Series 2623

Mixing manifold and probe holder unit for Kilma-ECONBLOCK RF series Fixed Point control unit.

unit comprised of: mixing manifold, including non-return valve and control return unit; fixed value adjustment using injection valve with thermostatic head with internal probe (low temperature delivery), probe holder unit and connector for circulation pump.

Code	Box	Carton	Cat.
26230600	1	1	30.02

KILMA BASIC2

Series 3691.A

"Kilma Basic2" distribution module in kit

Distribution module pre-assembled in wall flush mounted kit suitable for hydronic heating and cooling circuits.

The module is supplied with Kilma EVO2 HC internal regulator.
Insulation casing, of the brass parts, not included.

- Centre distance between attachments on the plant side 111 mm.
- Centre distance of connections on the diverter line of the low temperature manifold 50 mm, Euroconus G 3/4" threaded connections.

Kilma Basic2

Code	Size	Ways	Width (mm)	Height (mm)	Box	Carton	Cat.
36910260	1"	2+2	800	700÷820	1	1	30.02
36910360	1"	3+3	800	700÷820	1	1	30.02
36910460	1"	4+4	800	700÷820	1	1	30.02
36910560	1"	5+5	800	700÷820	1	1	30.02
36910660	1"	6+6	800	700÷820	1	1	30.02
36910760	1"	7+7	1000	700÷820	1	1	30.02
36910860	1"	8+8	1000	700÷820	1	1	30.02
36910960	1"	9+9	1000	700÷820	1	1	30.02
36911060	1"	10+10	1200	700÷820	1	1	30.02
36911160	1"	11+11	1200	700÷820	1	1	30.02
36911260	1"	12+12	1200	700÷820	1	1	30.02
36911360	1"	13+13	1200	700÷820	1	1	30.02
36911460	1"	14+14	1200	700÷820	1	1	30.02

high performance adjustable flow pump EEI<0.23 - ERP 622/2012
Cabinet depth 110 ÷ 160 mm

Insulation casing

Code	Box	Carton	Cat.
37050002*	1	1	30.02

* Specific insulation casing for mixing valve, circulator and well

Accessory external temperature probe available cod. 35020012
Cabinet dimensions allow installation of by-pass assembly code 910.06.00 (excluding 14-piece composition).
Use fittings with G 3/4" Euroconus thread (see p. 373) to connect the pipe to the L.T. manifold.
Product specific for summer/winter radiant climate control.

KILMA BASIC2 H.T.

Series 3691.B

"Kilma Basic2 H.T." distribution module in kit

Distribution module pre-assembled in wall flush mounted kit suitable for hydronic heating and cooling circuits.

The module is supplied with Kilma Basic RM internal regulator.
H.T. manifold thermostatically controlled.
Insulation casing, of the brass parts, not included.

- Centre distance between attachments on the plant side 90 mm.
- Centre distance of connections on the diverter line of the low temperature manifold 50 mm, Euroconus G 3/4" threaded connections.
- Centre distance of connections on the diverter line of the high temperature manifold 45 mm, Euroconus G 3/4" threaded connections.

Kilma Basic2 H.T.

Code	Size	Ways	Width (mm)	Height (mm)	Box	Carton	Cat.
36910270	1"	2+2	800	700÷820	1	1	30.02
36910370	1"	3+3	800	700÷820	1	1	30.02
36910470	1"	4+4	800	700÷820	1	1	30.02
36910570	1"	5+5	800	700÷820	1	1	30.02
36910670	1"	6+6	800	700÷820	1	1	30.02
36910770	1"	7+7	1000	700÷820	1	1	30.02
36910870	1"	8+8	1000	700÷820	1	1	30.02
36910970	1"	9+9	1000	700÷820	1	1	30.02
36911070	1"	10+10	1200	700÷820	1	1	30.02
36911170	1"	11+11	1200	700÷820	1	1	30.02
36911270	1"	12+12	1200	700÷820	1	1	30.02
36911370	1"	13+13	1200	700÷820	1	1	30.02
36911470	1"	14+14	1200	700÷820	1	1	30.02

high performance adjustable flow pump EEI<0.23 - ERP 622/2012
Cabinet depth 110 ÷ 160 mm

Insulation casing

Code	Box	Carton	Cat.
37050002*	1	1	30.02
37050012**	1	1	30.02

* Specific insulation casing for mixing valve, circulator and well
** Specific insulation casing for H.T. manifold.

Accessory external temperature probe available cod. 35020012
The dimensions of the cabinet allow installation of the By-pass assembly code 9100600 (excluding the 14-piece composition).Use fittings with G 3/4" Euroconus thread (see p. 373) for piping connection to the A.T. manifold.
Use fittings with G 3/4" Euroconus thread (see p. 373) to connect the pipe to the L.T. manifold.
Product specific for summer/winter radiant climate control.

KILMA EASY2

Series 3691.C

Kilma Easy2 distribution module in kit

Distribution module pre-assembled in wall flush mounted kit suitable for hydronic heating and cooling circuits.
The Module can be electrically connected to the thermoregulators in the Kilma Set 2 series.
Insulation casing, of the brass parts, not included.

Centre distance between attachments on the plant side 111 mm.
Centre distance of connections on the diverter line of the low temperature manifold 50 mm, Euroconus G 3/4" threaded connections.

Kilma Easy2

Code	Size	Ways	Width (mm)	Height (mm)	Box	Carton	Cat.
36910250	1"	2+2	800	700÷820	1	1	30.02
36910350	1"	3+3	800	700÷820	1	1	30.02
36910450	1"	4+4	800	700÷820	1	1	30.02
36910550	1"	5+5	800	700÷820	1	1	30.02
36910650	1"	6+6	800	700÷820	1	1	30.02
36910750	1"	7+7	1000	700÷820	1	1	30.02
36910850	1"	8+8	1000	700÷820	1	1	30.02
36910950	1"	9+9	1000	700÷820	1	1	30.02
36911050	1"	10+10	1200	700÷820	1	1	30.02
36911150	1"	11+11	1200	700÷820	1	1	30.02
36911250	1"	12+12	1200	700÷820	1	1	30.02
36911350	1"	13+13	1200	700÷820	1	1	30.02
36911450	1"	14+14	1200	700÷820	1	1	30.02

high performance adjustable flow pump EEI<0.23 - ERP 622/2012
Cabinet depth 110 ÷ 160 mm

Insulation casing

Code	Box	Carton	Cat.
37050002*	1	1	30.02

* Specific insulation casing for mixing valve, circulator and well

The dimensions of the cabinet allow installation of the By-pass assembly code 09100600 (excluding the 14-piece composition).
Use Euroconus fittings with G 3/4" thread (see page 373) for piping connection to the A.T. manifold.
Use fittings with G 3/4" Euroconus thread (see p. 373) to connect the pipe to the L.T. manifold.
Product specific for summer/winter radiant climate control.

KILMA EASY2 H.T.

Series 3691.D

Kilma Easy2 A.T. distribution module in kit

Distribution module pre-assembled in wall flush mounted kit suitable for hydronic heating and cooling circuits.
The Module can be electrically connected to the thermoregulators in the Kilma Set 2 series.
H.T. manifold thermostatically controlled.
Insulation casing, of the brass parts, not included.

Centre distance between attachments on the plant side 90 mm.
Centre distance of connections on the diverter line of the low temperature manifold 50 mm, Euroconus G 3/4" threaded connections.
Centre distance of connections on the diverter line of the high temperature manifold 45 mm, Euroconus G 3/4" threaded connections.

Kilma Easy2 H.T.

Code	Size	Ways	Width (mm)	Height (mm)	Box	Carton	Cat.
36910200	1"	2+2	800	700÷820	1	1	30.02
36910300	1"	3+3	800	700÷820	1	1	30.02
36910400	1"	4+4	800	700÷820	1	1	30.02
36910500	1"	5+5	800	700÷820	1	1	30.02
36910600	1"	6+6	800	700÷820	1	1	30.02
36910700	1"	7+7	1000	700÷820	1	1	30.02
36910800	1"	8+8	1000	700÷820	1	1	30.02
36910900	1"	9+9	1000	700÷820	1	1	30.02
36911000	1"	10+10	1200	700÷820	1	1	30.02
36911100	1"	11+11	1200	700÷820	-	1	30.02
36911200	1"	12+12	1200	700÷820	1	1	30.02
36911300	1"	13+13	1200	700÷820	1	1	30.02
36911400	1"	14+14	1200	700÷820	1	1	30.02

high performance adjustable flow pump EEI<0.23 - ERP 622/2012
Cabinet depth 110 ÷ 160 mm

Insulation casing

Code	Box	Carton	Cat.
37050002*	1	1	30.02
37050012**	1	1	30.02

* Specific insulation casing for mixing valve, circulator and well
** Specific insulation casing for H.T. manifold.

The dimensions of the cabinet allow installation of the By-pass assembly code 09100600 (excluding the 14-piece composition).
Use fittings with G 3/4" Euroconus thread (see p. 373) for piping connection to the A.T. manifold.
Use fittings with G 3/4" Euroconus thread (see p. 373) to connect the pipe to the L.T. manifold.
Product specific for summer/winter radiant climate control.

MODULAR DISTRIBUTION SYSTEMS COUPLING AT + BT / HOUSING BOXES

COMPOSITION WITH RELIEF VALVES

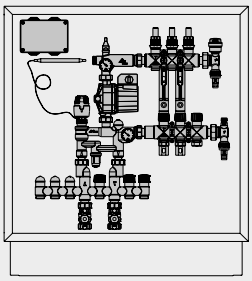

NUMBER OF B.T. MANIFOLDS											
2	3	4	5	6	7	8	9	10	11	12	13
HOUSING BOX L=800 Cod.**9241.005**				HOUSING BOX L=1000 Cod.**9242.005**				HOUSING BOX L=1200 Cod.**9243.005**			

COMPOSITION WITH BY-PASS UNIT

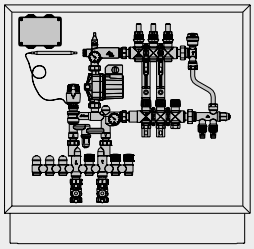

NUMBER OF B.T. MANIFOLDS											
2	3	4	5	6	7	8	9	10	11	12	13
HOUSING BOX L=800 Cod.**9241.005**				HOUSING BOX L=1000 Cod.**9242.005**				HOUSING BOX L=1200 Cod.**9243.005**			UNAVAI-LABLE

30. RADIANT CLIMATE CONTROL SYSTEMS

30.03 MANIFOLD CABINET

Manifold cabinet

HOUSING AND INSPECTION CABINETS FOR HEATING AND COOLING SYSTEM

RBM's wide range of housing and inspection boxes is specially designed for manifolds and mixing units for heating and cooling systems.

Choose t**he most comprehensive solution**, formulated to meet every functional and aesthetic need while guaranteeing high quality and maximum performance.

Box 1 flush with the wall
Series 3834.R

Sizes:
400x500 mm - 600x500 mm
800x500 mm - 1000x500 mm

Paintable MDF cover

Telescopic frame

Box1 Filo Parete
Series 3844.R

Sizes:
800x700 mm - 1000x700 mm
1200x700 mm

Paintable MDF cover

Telescopic frame

Box Dev
Series 4124

Sizes:
400x500 mm - 600x500 mm
800x500 mm - 1000x500 mm

Paintable cover

Telescopic bottom

Box1
Series 2606.A

Sizes:
400x500 mm - 600x500 mm
800x500 mm - 1000x500 mm

Paintable cover

Telescopic bottom

Quickbox
Series 1972

Sizes:
550x400 mm - 700x400 mm
850x400 mm

Paintable cover

Telescopic bottom

S-Box
Series 9241

Sizes:
800x700 mm - 1000x700 mm
1200x700 mm

Telescopic bottom

30.03 MANIFOLD CABINET | MANIFOLD CABINET

BOX 1 FLUSH WALL INSTALLATION

Series 3834R

Inspection and housing box, flush with the wall installation.

Metal case for manifolds, flush wall installation.
Paintable MDF cover.
Telescopic frame 95 ÷ 145 mm

BIM

Metal case for manifolds, flush wall installation

Code	Dim. LxH (mm)	Box	Carton	Cat.
3834R4012	400x500	1	1	30.03
3834R6012	600x500	1	1	30.03
3834R8012	800x500	1	1	30.03
3834R1012	1000x500	1	1	30.03

Adjustable depth 95 ÷ 145 mm

Pair of floor-anchoring feet

Code	Box	Carton	Cat.
29480002	1	1	30.03

Maximum adjustable height 100 mm

Telescopic chassis/frame and cover.
Execution with movable guides for the free positioning of the components inside the cabinet.
Universal cabinet, suitable for housing 1" manifolds kit series 608, 2028, 1410, 1002, 3202.
Feet for fastening to the floor, ordered separately as accessories.

Series 3844R

Box for Kilma control units, flush with the wall installation.

Paintable cover.

Code	Dim. LxH (mm)	Box	Carton	Cat.
3844R8002	800x700	1	1	30.03
3844R1002	1000x700	1	1	30.03
3844R1202	1200x700	1	1	30.03

Feet included in the supply.
Maximum adjustable height 120 mm.

BOX 1

Housing and inspection box.
Flush wall installation.

It can be used with **simple and thermostatically controlled** manifolds for heating systems.
Galvanised steel structure, MDF cover.

- **Adjustable depth/**telescopic bottom
- Can be installed in **plasterboard and masonry walls**
- **Paintable** cover
- **Easy** installation
- **Elegant, minimal design,** which can be integrated with architectural solutions

30.03 MANIFOLD CABINET | MANIFOLD CABINET

BOX DEV

Series 4124

Cabinet for heating and cooling system manifold.

Cover in MDF and white painted frame.
Adjustable frame.

BIM

Cabinet for heating and cooling systems manifolds

Code	Dim. LxH (mm)	Box	Carton	Cat.
41244000	400x500	1	1	30.03
41246000	600x500	1	1	30.03
41248000	800x500	1	1	30.03
41241000	1000x500	1	1	30.03

Pair of floor-anchoring feet

Code	Box	Carton	Cat.
29480002	1	1	30.03

Maximum adjustable height 100 mm

Telescopic chassis/frame and cover.
Execution with movable guides for the free positioning of the components inside the cabinet.
Universal cabinet, suitable for housing 1" manifolds kit series 608, 2028, 1410, 1002, 3202.
Feet for fastening to the floor, ordered separately as accessories.

BOX1

Series 2606.A

Manifold housing and inspection cabinet, for flush-mount installation.

Made of galvanized steel with bottom and side locks, complete with universal moveable guides for bracket mounting and removable paintable plastic lid. Feet for fastening to the floor, ordered separately.

BIM

Flush-mount manifold cabinet, metal structure and plastic cover

Code	Dim. LxH (mm)	Box	Carton	Cat.
26064002	400x500	1	1	30.03
26066002	600x500	1	1	30.03
26068002	800x500	1	1	30.03
26061002	1000x500	1	1	30.03

Adjustable depth 80÷130 mm (overall depth 80÷150 mm if considering the useful stroke of the screws used for fixing the plastic cover to the metal structure).

Pair of floor-anchoring feet

Code	Box	Carton	Cat.
29480002	1	1	30.03

Maximum adjustable height 100 mm

It can be inserted in walls made with 8 cm bricks, plastered on both sides.
Paintable plastic cover.
Telescopic chassis/frame and cover.
With actuators installed on valves with thermostatic option, provide extended cover clamping screws code 2155.005
Execution with movable guides for the free positioning of the components inside the cabinet.
UNIVERSAL cabinet, suitable for housing 1" manifold kits Series 608 - 2028 - 1410 - 1002 - 3202
Feet for fastening to the floor, ordered separately as accessories.

30.03 MANIFOLD CABINET | MANIFOLD CABINET

QUICKBOX

Series 1972

Plastic manifold housing and inspection cabinet, flush-mount installation.

Plastic structure with bottom and side closures, complete with removable cover.

BIM

Code	Dim. LxH (mm)	Box	Carton	Cat.
19725500	550x450	1	1	30.03
19727000	700x450	5	1	30.03
19728500	850x450	5	1	30.03

adjustable depth 80÷100 mm

It can be inserted in walls made with 8 cm bricks, plastered on both sides.
Plastic cabinet. Paintable cover
Suitable for housing 1" manifolds Kit series 608 - 2028 - 1410
Cabinet not suitable to house compositions with motorised zone valve.

Series 9241

Metal cabinet for Kilma control unit.

Code	Useful Dim. (mm)	Box	Carton	Cat.
09241005	800x110÷160x700÷820	1	1	30.03
09242005	1000x110÷160x700÷820	1	1	30.03
09243005	1200x110÷160x700÷820	1	1	30.03

Series 898

Metal cabinet for manifold inspection, wall mounted.

Made of painted steel sheet with bottom and side closures, complete with guides for manifold fixing, lid with closure lock

- Wall-installation (not flush-mount) for indoors.
- Height H adjustable with feet (730÷870 mm).
- Depth 235 mm.

Code	Lenght (mm)	Box	Carton	Cat.
08986002	600	1	1	30.03
08981002	1000	1	1	30.03
08981502	1500	1	1	30.03

03.
CLIMATE
COMFORT

30. RADIANT CLIMATE CONTROL SYSTEMS

30.04 INSULATION PANELS

Insulation panels

30.04 INSULATION PANELS | INSULATION PANELS

KILMA-SUPER-STRONG

Series 1361

Panel "KILMA-SUPER-STRONG".

Insulating panel made of sintered expanded polystyrene closed-cell foam, with preformed relief parts for pipe housing, combined with anti-collision polystyrene pre-formed sheet.
Suitable panel to make circuits with a 50mm pitch and multiple circuits.
Coupling with an overlap of the pre-formed foil on one side.

- Real size: 1350x850 mm
- Useful Dim. 1300x800 mm
- Usable floor area 1.04 m²
- Foil thickness 0.6 mm
- EPS 150
- Euroclass E

CERTIFICATIONS:

In compliance with UNI-EN 13163

IIP UNI 331 certified

HBCD FREE

COMPATIBLE SYSTEMS:

KILMA-ISI

Code	Useful Dim. (mm)	Insul. Th. (mm)	Heat Res.	Box	Box m²	Pallet m²	Cat.
13611000	1300x800x33	10	0,303	18	18,72	93,60	30.04
13611800	1300x800x40	18	0,545	14	14,56	72,80	30.04
13612800	1300x800x50	28	0,848	10	10,40	52	30.04
13614200	1300x800x65	42	1,273	7	7,28	36,40	30.04
13615000	1300x800x73	50	1,515	6	6,24	31,20	30.04

It is highly resistant to pressure from foot traffic.
Applicable piping diameter: 14÷17 mm.

KILMA-STRONG

Series 1188

Kilma STRONG thermoformed sheet without insulation

Pre-formed foil sheet in printed shockproof polystyrene.
Suitable for the creation of 50 mm multiple pitch circuits.
Coupling by the overlapping of the pre-formed foil itself on one side.

- Real size: 1350x850 mm
- Useful Dim. 1300x800 mm
- Usable floor area 1.04 m²
- Foil thickness 1 mm

COMPATIBLE SYSTEMS:

KILMA-ISI

Code	Useful Dim. (mm)	Box	Box m²	Pallet m²	Cat.
11882002	1300x800x23	24	24,96	124,80	30.04

It is highly resistant to pressure from foot traffic.
Applicable piping diameter: 14÷17 mm.

KILMA-BULL

Series 1938

"Kilma-BULL" panel.

Insulating panel made of stamped sintered expanded polystyrene closed-cell foam, with pre-formed relief parts for pipe housing, combined with "PS" film. Grooves undercut spacing 50mm for the realisation of 50 mm multiple pitch circuits
Coupling possible by male/female peripheral interlocking joints.

- Real size: 1223x823 mm
- Net size: 1200x800 mm
- Usable floor area 0.96 m²
- EPS 200 (thickness 33 mm) - EPS 150 (thickness 45-60 mm)
- Euroclass E

CERTIFICATIONS:

In compliance with UNI-EN 13163

IIP UNI 331 certified

CSTB Certificate 250 - 179

HBCD FREE

Code	Useful Dim. (mm)	Insul. Th. (mm)	Heat Res.	Box m²	Pallet m²	Cat.
19381300	1223x823x33	10+3	0,300	19,20	76,80	30.04
19382500	1223x823x45	15+10	0,450	13,44	53,76	30.04
19384000	1223x823x60	30+10	0,910	9,60	38,40	30.04

Applicable piping diameter: 16÷20 mm

Series 1978

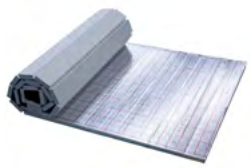

"Kilma-ROLL" rolled panel.

Roll panel made of expanded polystyrene, bonded with reflective aluminised film, and featuring cross tracing with 50mm installation spacing. Can be combined with other panels by overlapping the reflective film on one side.

- Euroclass E

CERTIFICATIONS:

HBCD FREE

COMPATIBLE SYSTEMS:

KILMA-GRAF

KILMA-RETE

KILMA-ROLL

Code	Useful Dim. (mm)	Insul. Th. (mm)	Heat Res.	Box	Box m²	Pallet m²	Cat.
19782002	1000x10000x20	20	0,606	1	10	70	30.04
19783002	1000x10000x30	30	0,909	1	10	60	30.04
19784002	1000x10000x40	40	1,212	1	10	50	30.04
19785002	1000x10000x50	50	1,515	1	10	50	30.04

KILMA-ROLL EVO with athermanous elements

Code	Useful Dim. (mm)	Insul. Th. (mm)	Heat Res.	Box	Box m²	Pallet m²	Cat.
19784012	1000x10000x40	40	1,333	1	10	50	30.04

For head joints use anodised aluminium adhesive tape code 2018.00.02

03.
CLIMATE
COMFORT

30. RADIANT CLIMATE CONTROL SYSTEMS

30.05 DRY INSULATION SYSTEM

Kilma Futura

KILMA FUTURA

The new high efficiency radiant for heating and cooling system for dry installation

Learn more about Kilma Futura system

KILMA FUTURA is a revolutionary high efficiency radiant heating and cooling system, suitable for dry floor, wall and ceiling installation. If in- stalled on the floor, **KILMA FUTURA** does not require a screed, therefore, it has very small overall dimensions.

Kilma Futura eliminates downtime in the site caused by waiting times for the cement screed to dry and consequently, guarantees immediate walk- ability. Lastly, thanks to the absence of the cement screed, it is possible for systems to be installed with very low thermal inertia.

- No cement screed is needed
- Low thermal inertia: heats up in a few minutes
- Energy great savings
- Maximum comfort
- Floor, wall, ceiling installation
- Can be used in heating or cooling
- Total thickness less than 3 cm
- Quick and easy to install
- Ideal for rennovation and new houses with high energy efficiency!

1. Ceiling installation
2. False ceiling installation
3. Wall installation
4. Under floor installation

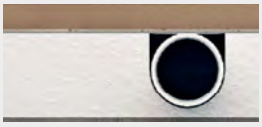

TOTAL THICKNESS
28 mm (SCALE 1:1)

Download the
INSTALLATION
MANUAL

Floor laid directly on the panel

FLOOR INSTALLATION

CERAMIC FINISH

1 Perimeter expansion joint

2 Glue for fixing the panel to the substrate

3 Kilma-Futura Panel

4 Pipe Kilma-Flex PE-RT Ø16x2 mm

5 If necessary, aluminised tape to block the pipe on the bends (about 1m/m²)

6A Protection epoxy primer (e.g. PRIMER MF RBM by Mapei)

6B Superior glue gripping primer (not supplied)

7 Glue for tiles (not supplied)

8 Tiles (minimum dim. 25x25 cm or in alternative 15x30 cm strips)

9 Skirting board

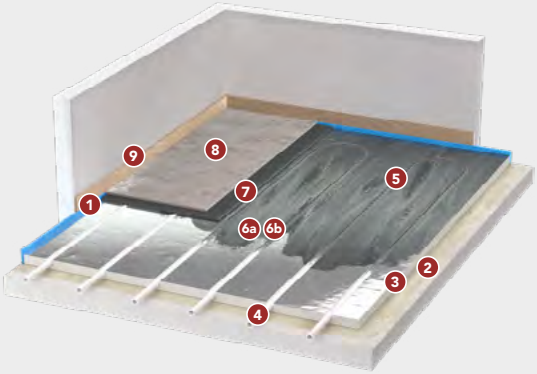

PARQUET FINISH (TYPE 1 WITH FLOATING PARQUET)

1 Perimeter expansion joint

2 Glue for fixing the panel to the substrate

3 Kilma-Futura Panel

4 Pipe Kilma-Flex PE-RT Ø16x2 mm

5 If necessary, aluminised tape to block the pipe on the bends (about 1m/m²)

6 PE protective sheet

7 Any substrate fabric/non-fabric layer (not supplied)

8 Floating parquet placed resting on the underlying surface

9 Skirting board

PARQUET FINISH (TYPE 2 WITH GLUED PARQUET)

1 Perimeter expansion joint

2 Glue for fixing the panel to the substrate

3 Kilma-Futura Panel

4 Pipe Kilma-Flex PE-RT Ø16x2 mm

5 If necessary, aluminised tape to block the pipe on the bends (about 1 m/m²)

6 IsolTile support mat (with adhesive)/IsolTile (without adhesive,requires glue not supplied by RBM) by Isolmant (not supplied)

7 Glue for parquet (not supplied)

8 Parquet

9 Skirting board

KILMA FUTURA

The new high efficiency radiant heating and cooling system for dry installation

Download all the STRATIGRAPHIES

A1 KILMA-FUTURA SYSTEM / CEILING

Version: IN ADHERENCE to the attic slab
Finishing: 12,5 mm plasterboard slab

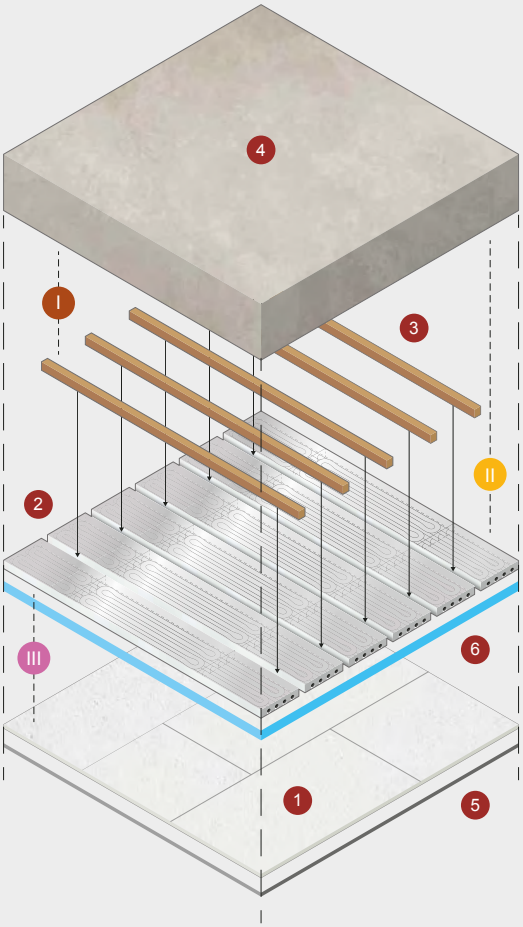

COMPONENTS

1. **Plasterboard slab**
   approximately 12.5
2. **Kilma Futura Panel**
   Th. 25 mm
   (or other chosen thickness, excluding 17 mm th.)
3. **Wood planks 40x25 mm section**
   with possible interruptions of the section to allow the passage of pipe bends and circuit supplies.
4. **Attic**
   (necessarily flat)
5. **Elastic joint for slabs in plasterboard**
   PLEASE NOTE: Any expansion joints to be provided are the responsibility of the plasterer, in compliance with the specific installation specifications for the chosen finish.
6. **Perimeter strip**
   (optional)

FIXING TYPES

- **I** **Fixing I:** wood plank on soffit floor slab
- **II** **Fixing II:** Futura panel on soffit floor slab (flange head screws suitable for EPS)
- **III** **Fixing III:** lasterboard finish fixed to the wood planks

B1 KILMA-FUTURA SYSTEM / CEILING

Version: HANGING with cavity with DOUBLE OVERLAPPED STRUCTURE 1st level structure pitch RESTRICTED to the installation of the radiant
Hypothesised finish: 12,5 mm plasterboard slab

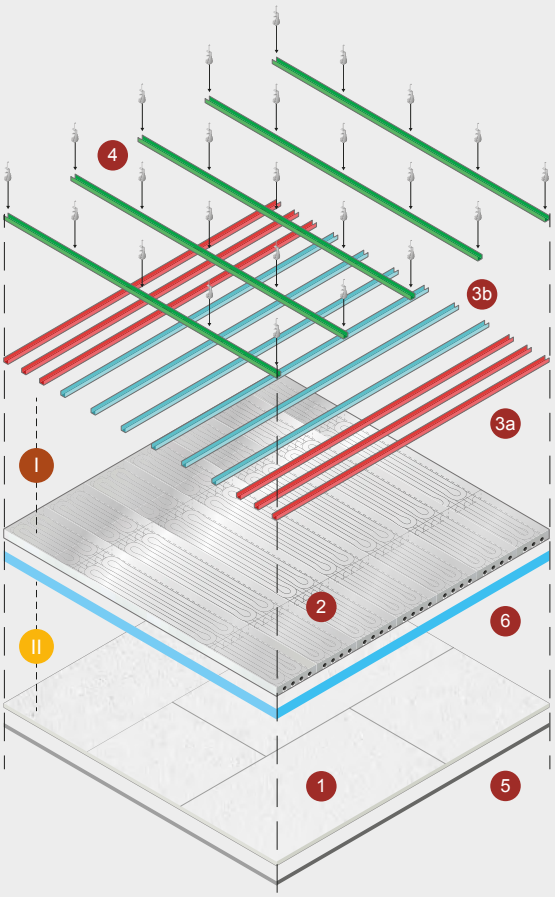

COMPONENTS

1. **Plasterboard slab**
   approximately 12.5
2. **Kilma Futura Panel Th. 25 mm**
   (or other chosen thickness, excluding 17 mm th.)

Pitch structure restricted

3a. **1st Level structure Fine Pitch Zone**
   (for supporting the circuit curves)

3b. **1st Level structure Straight Zone**
   (for supporting the straight sections of the circuits)

4. **2st level structure + suspension**
5. **Elastic joint for plasterboard slabs**
   PLEASE NOTE: Any expansion joints to be provided are the responsibility of the plasterer, in compliance with the specific installation specifications for the chosen finish.
6. **Perimeter strip (optional)**

FIXING TYPES

- **I** **Fixing I: Futura panel on 1st level structure**
  we recommend:
  - "flange head" screws suitable for self-drilling EPS
- **II** **Fixing II: for finishing slab on 1st level structure**

B2 KILMA-FUTURA SYSTEM / CEILING

Version: HANGING with cavity
with DOUBLE OVERLAPPED STRUCTURE
1st level structure pitch NOT RESTRICTED
to the installation of the radiant system.
Hypothesised finish: 12,5 mm plasterboard slab

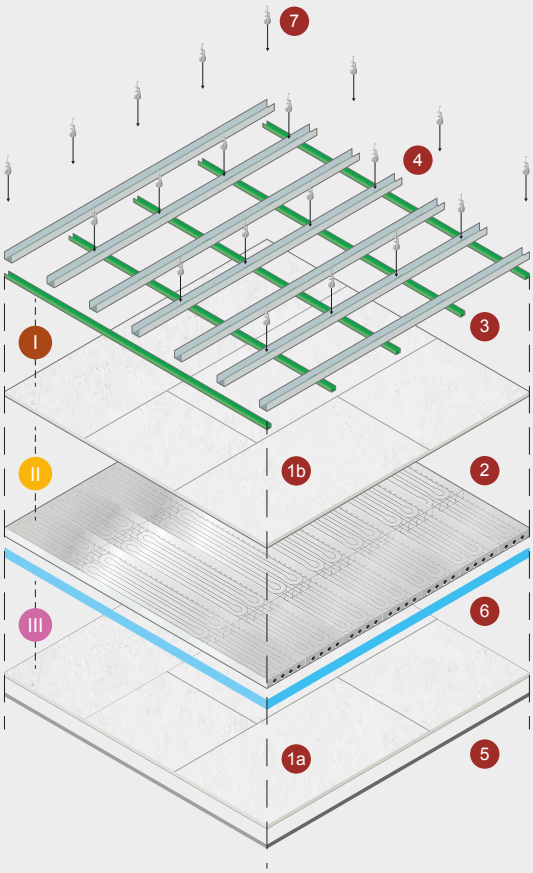

COMPONENTS

- 1a **FINISH plasterboard slab** approximately 12.5
- 1b **SUPPORT plasterboard slab** approximately 12.5
- 2 **Kilma Futura Panel Th. 25 mm** (or other chosen thickness, excluding 17 mm th.)
- 3 **1st structure**
- 4 **2nd level structure**

FREE STRUCTURE PITCH

- 5 **Elastic joint for plasterboard slabs** PLEASE NOTE: Any expansion joints to be provided are the responsibility of the plasterer, in compliance with the specific installation specifications for the chosen finish.
- 6 **Perimeter strip (optional)**
- 7 **Attic (necessarily flat)**

FIXING TYPES

- I **Fixing I:** for support slab (1st slab) on 1st level structure
- II **Fixing II: Futura panel on 1st level structure** (or on support plasterboard slab) we recommend: - "flange head" screws suitable for self-drilling EPS
- III **Fixing III: for finishing slab on 1st level structure**

C2 KILMA-FUTURA SYSTEM / CEILING

Version: WITH DOUBLE FLOATING STRUCTURE on soffit floor slab. Structure pitch NOT RESTRICTED to the installation of the radiant system.
Hypothesised finish: 12,5 mm plasterboard slab

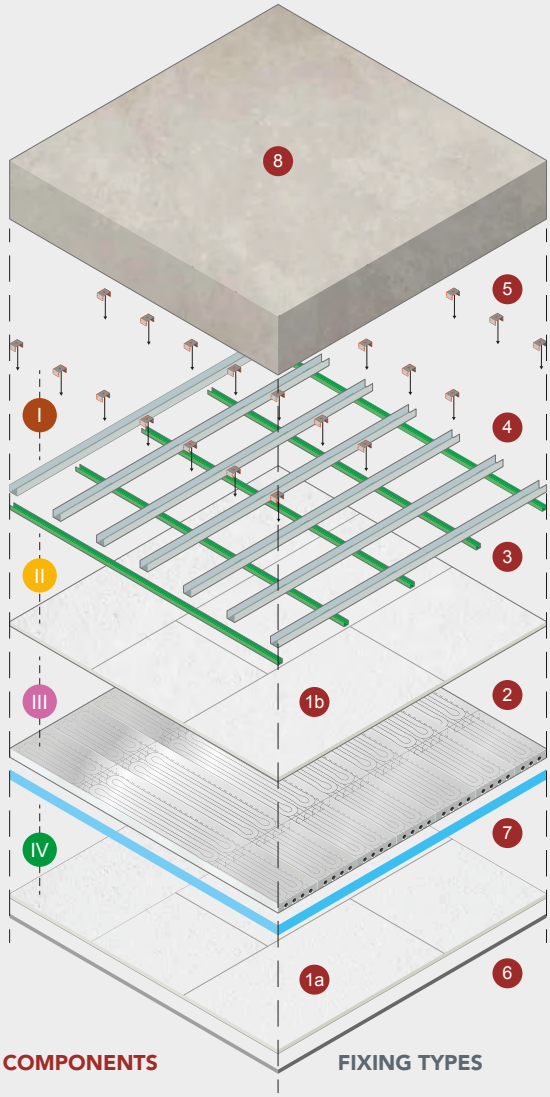

COMPONENTS

- 1a **FINISH plasterboard slab** approximately 12.5
- 1b **REINFORCEMENT plasterboard slab** approximately 12.5
- 2 **Kilma Futura Panel Th. 25 mm** (or other chosen thickness)
- 3 **1st level structure** Alternatively it is possible to use a single structure level defining an overall dimension of less than 90 mm.
- 4 **2nd level structure**
- 5 **Simple snap hooks with spacer function**
- 6 **Elastic joint for plasterboard slabs** PLEASE NOTE: Any expansion joints to be provided are the responsibility of the plasterer, in compliance with the specific installation specifications for the chosen finish.
- 7 **Perimeter strip (optional)**
- 8 **Attic (necessarily flat)**

FIXING TYPES

- I **Fixing I:** for support slab (1st slab) on 1st level structure
- II **Fixing II:** for support slab (1st slab) on 1st level structure
- III **Fixing III: for Futura panel on 1st level structure** we recommend: - "flange head" screws suitable for self-drilling EPS
- IV **Fixing IV: plasterboard finish on 1st level structure**

KILMA FUTURA

Wall mounted

The Kilma-Futura panel can also be mounted **on the wall**. It can be installed on masonry walls and on plasterboard walls, and then is covered with a plasterboard or gypsum fibre sheet. Its reduced thickness, quick installation and the use of 16x2 pipes that can be connected directly to the radiant manifold make it suitable for any installation.

MASONRY WALL

1. Wooden strip 40x25mm
2. EPS300 RBM Kilma Futura panel 25 mm thick
3. RBM Kilma Flex pipe Ø16x2 mm
4. Plasterboard panel
5. Possible buffer strip for installation of electrical sockets according to CEI 64-8

PLASTERBOARD WALL

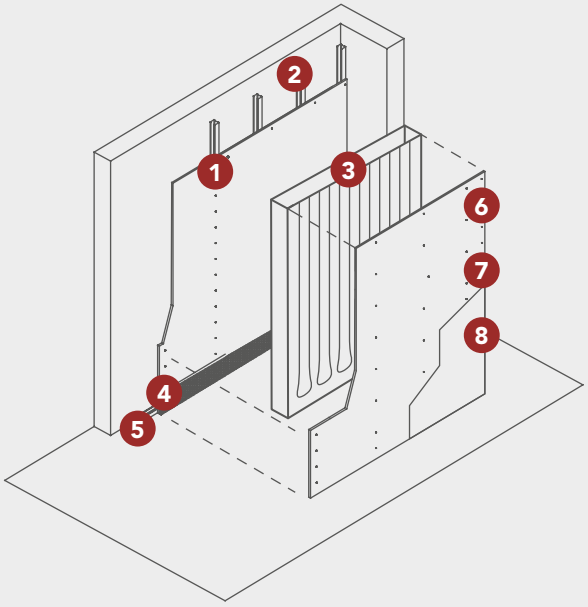

1. Single plasterboard slab (support)
2. Upright profile
3. RBM FUTURA panel
4. Clearance from floor level (for electrical sockets according to IEC 64-8)
5. Basic profile
6. Fixing the finishing sheet
7. Plasterboard sheet (system closure)
8. Levelling and finishing

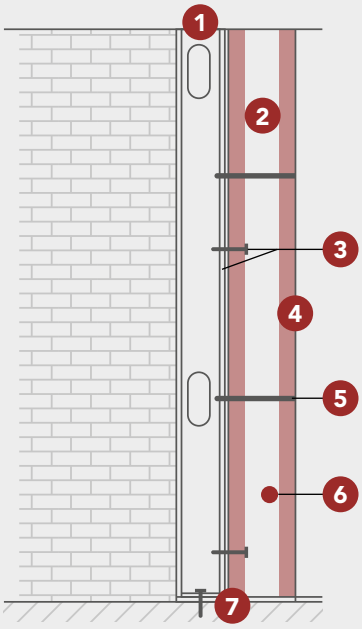

1. Metal profile (upright)
2. RBM FUTURA 25 mm panel
3. Fixing I:
   for support sheet on upright profile frame
4. Plasterboard slab + levelling
5. Fixing II:
   for finishing sheet on upright profile structure
6. RBM tube Ø16x2 mm
7. Basic profile

30.05 DRY INSULATION SYSTEM | INSULATION PANELS

KILMA FUTURA
Series 3841.A

High efficiency insulation panel for dry installations.

Installation pitch 160 mm; coil circuit placement.
Suitable for floor, wall, ceiling and false ceiling installation.

Panel obtained from EPS 300 sheet, milled to allow piping to be laid, top coating with an aluminium layer.

- Real Dim.: 1200X800 mm
- Usable floor area 0.96 m²

CERTIFICATIONS:
HBCD FREE

Code	Useful Dim. (mm)	Insul. Th. (mm)	Heat Res.	Box m²	Pallet m²	Cat.
38412000	1200x800x20	20	0,56	22,08	88,32	30.05
38412500	1200x800x25	25	0,71	18,24	72,96	30.05
38413300	1200x800x33	33	0,95	14,40	57,60	30.05
38414800	1200x800x48	48	1,41	9,60	38,40	30.05

Applicable piping type: Hi Performance Plus 16x2 polyethylene.
To install the panel, it is recommended to use specific adhesives compatible with EPS and relative substrate (use KILMA FUTURA AD code 37020002 or else glues as per technical documentation.
To prevent the pipe from coming off the retention guides and to restore the aluminised film (in case this has been removed during operations performed at the building site) use the anodised aluminium adhesive tape code 2018.00.02

KILMA FUTURA
Series 3841.B

High efficiency insulation panel for dry installations.

Installation pitch 100 mm; coil circuit laying.
Suitable for floor, ceiling and false ceiling installation.

Panel obtained from EPS 300 sheet, milled to allow piping to be laid, top coating with an aluminium layer.

- Real Dim.: 1200X800 mm
- Usable floor area 0.96 m²

CERTIFICATIONS:
HBCD FREE

Code	Useful Dim. (mm)	Insul. Th. (mm)	Heat Res.	Box	Box m²	Pallet m²	Cat.
38412010	1200x800x20	20	0,51	-	22,08	88,32	30.05
38412510	1200x800x25	25	0,53	19	18,24	72,96	30.05
38413310	1200x800x33	33	0,78	-	14,40	57,60	30.05
38414810	1200x800x48	48	1,25	-	9,60	38,40	30.05

Applicable piping type: Hi Performance Plus 16x2 polyethylene.
To install the panel, it is recommended to use specific adhesives compatible with EPS and relative substrate (use KILMA FUTURA AD code 37020002 or else glues as per technical documentation.
To prevent the pipe from coming off the retention guides and to restore the aluminised film (in case this has been removed during operations performed at the building site) use the anodised aluminium adhesive tape code 2018.00.02

phonofix
by RBM S.p.A.

Stabilising layer for parquet

Phonofix by RBM is a technological and innovative product specifically for the application of glued parquet in combination with the Kilma Futura system.

PHONOFIX is a low-thickness, desolidarising and reinforcing elastodynamic resilient acoustic layer designed for the application of parquet glued with the KILMA FUTURA system. Nominal thickness 2 mm.

INSTALLATION

STEP 1

SUBSTRATE PREPARATION

The surface of the KILMA FUTURA system onto which PHONOFIX is to be applied must be load-bearing, flat, level, clean and free of debris or oil. Check that the pipes are properly fitted into the appropriate seats in the panel and that they do not protrude from the panel. However, it will be the responsibility of the installer to assess the suitability of the surface for laying the mat.

STEP 2

LAYING OF SHEETS

Phonofix is laid floating on the KILMA FUTURA system (*). Remove any air pockets below the Phonofix sheets to achieve perfect adhesion to the surface. In this regard, it is recommended to apply adequate pressure on the sheets, preferably by using a glue roller. During laying, extreme care must be taken to place the Phonofix sheets next to each other without overlapping, so as to guarantee the continuity of the insulating layer and avoid the formation of acoustic bridges. It is also necessary to tape the joints between the sheets themselves with the joint strip included in the package.

(*) Only in the event that it is not easy to lay the sheets can they be bonded to the Kilma Futura system using, for example, an anti-slip adhesive such as D965 by Wakol or similar.

STEP 3

LAYING OF THE FLOOR

In the case of floating laying of the mat on the Kilma Futura system, the parquet laying operations can be carried out immediately, whereas when gluing the mats to the Kilma Futura panel, it will be necessary to wait for the times specified by the adhesive manufacturer before laying the flooring. The parquet (provided it is of a type compatible with the system) may be glued directly onto Phonofix by applying a layer of adhesive (excellent results have been obtained with epoxy-polyurethane glues) laid in accordance with the rules of art and according to the manufacturer's instructions. Phonofix is a water-proof covering: adequate drying times of the adhesive must be considered in relation to climate and site conditions.

STEP 4

SKIRTING BOARD LAYING

It is essential to make it known to all site operators that the excess of the perimeter strip should only be trimmed after the flooring has been laid and before the skirting board is installed. The direct contact of the floor with the walls, in fact, constitutes an acoustic bridge, causing a loss of insulation of several decibels. The perimeter strip also has the task of absorbing thermal expansion of the flooring subject to temperature differences.

- Easy to lay
- Thickness 2 mm
- Can be used in all environments
- Does not require the use of special adhesives
- Contains no volatile substances (VOC A+)
- Production with low environmental impact
- Can be recycled and disposed of according to EWC No. 170604
- Contributes to achieving credits for the environmental certification of a building according to LEED or ITACA protocols
- Complies with the requirements defined by the CAM-Building for acoustic and thermal insulation materials regarding the demand for high acoustic insulation performance, the percentage of recycled material and the absence of hazardous substances

RBM

30. RADIANT CLIMATE CONTROL SYSTEMS

30.06 PIPES

Polyethylene pipes

HI-PERFORMANCE PLUS PIPES

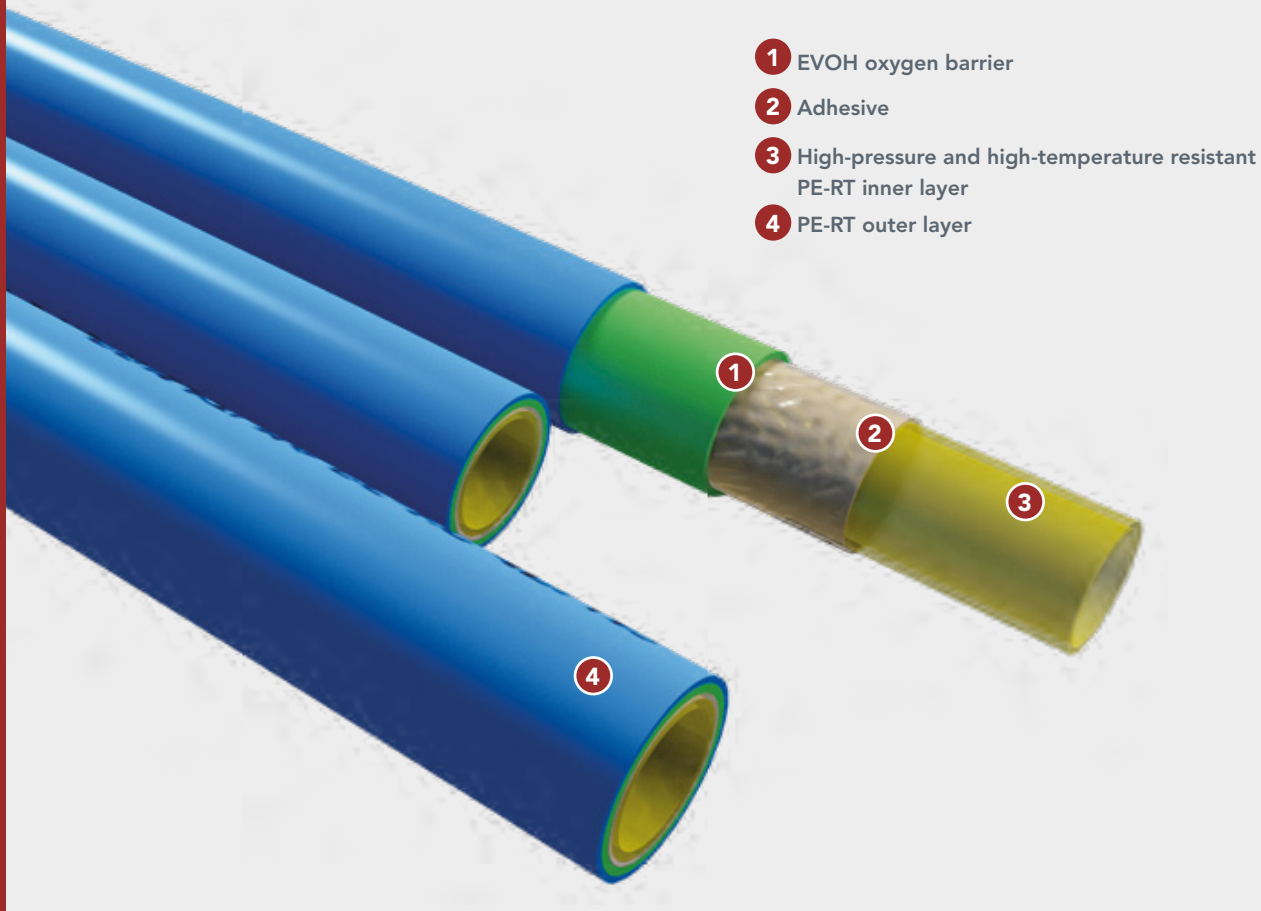

1. EVOH oxygen barrier
2. Adhesive
3. High-pressure and high-temperature resistant PE-RT inner layer
4. PE-RT outer layer

Hi Performance Plus pipes are made of a polymer resin, which has the traditional properties of polyethylene, with the addition of important extra features such as **increased resistance to high temperatures and high pressures.**

They do not require the post-extrusion cross-linking processes typical of PE-X pipes, making it possible to obtain a product that is:

- **Homogeneous** along the entire length and surface, not suject to unevenness
- **Heat-sealable**
- Extremely **flexible** in all weather conditions
- **Shape memory:** for example, in the case of crushing, just heat it up to make it perfectly circular again
- Duration **over 50 years**

4 LAYERS

Hi Performance Plus pipes consist of 4 layers, unlike conventional pipes which have only 3 layers (Polyethylene - Adhesive - Oxygen barrier).

In fact, the EVOH (oxygen barrier) layer is covered by a 4th PE-RT layer that protects its integrity from mechanical damage (e.g. from dragging or rubbing on site).

OPERATING CONDITIONS ACCORDING TO ISO 10508 AND EN ISO 22391

SIZE	OPERATING PRESSURE [BAR]			
	FOR APPLICATION CLASS			
	CLASS 1	CLASS 2	CLASS 4	CLASS 5
16X2	10	8	8	8
17X2	8	8	8	6
20X2	6	6	6	6

APPLICATION CLASS	OPERATING CONDITIONS FOR A PERIOD OF 50 YEARS AND 100 HOURS OF WHICH	FIELD OF APPLICATION
1	49 years at operating temperature (TD) of 60°C, 1 year at maximum temperature (Tmax) of 80°C and 100 hours at malfunction temperature (Tmal) of 95°C	Hot water supply (60°C)
2	49 years at operating temperature (TD) of 70°C, 1 year at maximum temperature (Tmax) of 80°C and 100 hours at malfunction temperature (Tmal) of 95°C	Hot water supply (70°C)
4	2.5 years at operating temperature (TD) of 20°C, 20 years at operating temperature (TD) of 40°C, 25 years at operating temperature (TD) of 60°C, 2.5 years at maximum temperature (Tmax) of 70°C and 100 hours at malfunction temperature (Tmal) of 100°C	Low temperature underfloor heating and radiators
5	14 years at operating temperature (TD) of 20°C, 25 years at operating temperature (TD) of 60°C, 10 years at operating temperature (TD) of 80°C, 1 year at maximum temperature (Tmax) of 90°C and 100 hours at malfunction temperature (Tmal) of 100°C	High temperature underfloor heating and radiators

CLASS 1

Hi-Performance Plus pipes can be used for sanitary installations (Class 4 and 5) and heating installations (Class 1 and 2).

Hi Performance Plus polymer resins show excellent performance in internal pressure resistance tests at elevated temperatures, making them ideal for use in hot and cold water piping systems.

Independent tests according to ISO 9080 at 20°, 80°, 95° and 110° C consistently show the absence of knee in the regression curves before 10,000 hours.

Therefore, RBM Kilma Hi Performance Plus pipes can be used for all class 1 applications in the same way as PE-Xa and PE-Xc.

Series 2517

Pipe Kilma HI-PERFORMANCE PLUS.

4-layer polyethylene pipe for underfloor heating (PE-RT Type II/EVOH/PE-RT).
The outer layer provides strong protection of the EVOH layer against the defects of mechanical agents. (e.g. scratches, gouges ...).
EVOH oxygen barrier pipe, co-extruded, DIN 4726.

CERTIFICATIONS:

Compliant with: EN ISO 22391-2

Code	Size	Model	Roll (m)	Box	Pallet m	Cat.
25171612	16x2	PE-RT Type II/EVOH/PE-RT	120	1	1680	30.06
25171602	16x2	PE-RT Type II/EVOH/PE-RT	240	1	1680	30.06
25171622	16x2	PE-RT Type II/EVOH/PE-RT	600	1	3600	30.06
25171712	17x2	PE-RT Type II/EVOH/PE-RT	120	1	1680	30.06
25171702	17x2	PE-RT Type II/EVOH/PE-RT	240	1	1680	30.06
25171722	17x2	PE-RT Type II/EVOH/PE-RT	600	1	3600	30.06
25172002	20x2	PE-RT Type II/EVOH/PE-RT	240	1	1680	30.06
25172032	20x2	PE-RT Type II/EVOH/PE-RT	500	1	2000	30.06

Size: Outside Ø x pipe thickness.

Externally protected EVOH barrier against any mechanical damage.
Full KOMO certified range available. Contact our sales department for the ordering codes.

Do not expose to direct sunlight.

Series 3954

Kilma-Flex 4 FIN pipe

4-layer pipe for underfloor and wall-mounted heating systems.
The innermost layer, in Polyethylene of raised temperature resistance (polyethylene of raised temperature resistance, not cross-linked), has an extremely smooth surface that allows a drastic reduction in head loss compared to the traditional metal pipe used in the heating and plumbing sector;
The two intermediate layers consist of a first layer of pigmented adhesive material with high strength and durability (in polyolefin polymers) and of a second film-forming and adjuvant film that increases installation flexibility;
The outermost layer consisting of a compound of polyethylene and adhesive, with a thickness of a few tens of µm, constitutes a valid protection of the internal layers against defects caused by mechanical agents (e.g. scratches, gouges, etc.).

Code	Size	Roll (m)	Box	Pallet m	Cat.
39541610	16x2	120	120	1680	30.06
39541600	16x2	240	240	1680	30.06
39541620	16x2	600	600	3600	30.06
39541710	17x2	120	120	1680	30.06
39541700	17x2	240	240	1680	30.06
39541720	17x2	600	600	3600	30.06
39542000	20x2	240	240	1680	30.06
39542030	20x2	500	500	2000	30.06

Size: Outside Ø x pipe thickness.

Series 464

KILMA-FLEX PE-Xc pipe.

3-layers polyethylene pipe for underfloor heating.
EVOH oxygen barrier pipe, co-extruded, DIN 4726.

CERTIFICATIONS:

Compliant with: EN ISO 15875-2

Code	Size	Model	Roll (m)	Box	Pallet m	Cat.
04641002	10x1,2	PE-Xc	1000	1	7000	30.06
04641612	16x2	PE-Xc	240	1	1680	30.06
04641712	17x2	PE-Xc	120	1	1680	30.06
04641702	17x2	PE-Xc	240	1	1680	30.06
04641722	17x2	PE-Xc	600	1	3600	30.06
04642002	20x2	PE-Xc	240	1	1680	30.06
04642032	20x2	PE-Xc	500	1	2000	30.06
04642502	25x2,3	PE-Xc	240	1	960	30.06
04642522	25x2,3	PE-Xc	310	1	1240	30.06

Cross-linked polyethylene according to the "C" method with Beta type rays.
Size: Outside Ø x pipe thickness.

Do not expose to direct sunlight.

Series 2009

KILMA-FLEX PE-Xa pipe

3-layers polyethylene pipe for underfloor heating.
EVOH oxygen barrier pipe, co-extruded, DIN 4726.

- Type: PE-Xa

CERTIFICATIONS:

Compliant with: EN ISO 15875-2

Code	Size	Model	Roll (m)	Box	Pallet m	Cat.
20091702	17x2	PE-Xa	600	1	2400	30.06
20092002	20x2	PE-Xa	500	1	1500	30.06

Cross-linked polyethylene according to the "A" method with peroxides.
Size: Outside Ø x pipe thickness.

Do not expose to direct sunlight.

Series 1484

KILMA-FLEX PE-RT pipe.

3-layers polyethylene pipe for underfloor heating.
EVOH oxygen barrier pipe, co-extruded, DIN 4726.

- Type: PE-RT

CERTIFICATIONS:

Compliant with: EN ISO 22391-2

Code	Size	Model	Roll (m)	Box	Pallet m	Cat.
14841622	16x2	PE-RT	120	1	1680	30.06
14841632	16x2	PE-RT	240	1	1680	30.06
14841602	16x2	PE-RT	600	1	3600	30.06
14841712	17x2	PE-RT	120	1	1680	30.06
14841702	17x2	PE-RT	240	1	1680	30.06
14841722	17x2	PE-RT	600	1	3600	30.06
14842002	20x2	PE-RT	500	1	2000	30.06
14842512	25x2,3	PE-RT	240	1	960	30.06
14842502	25x2,3	PE-RT	310	1	1240	30.06

Polyethylene of raised temperature resistance.
Size: Outside Ø x pipe thickness

Do not expose to direct sunlight.

03.
CLIMATE
COMFORT

30. RADIANT CLIMATE CONTROL SYSTEMS

30.07 COMPONENTS FOR RADIANT SYSTEMS

Components for radiant systems
Distribution accessories

PHONOFIX

Series 4120

Stabilising layer for parquet

PHONOFIX is a low-thickness, desolidarising and reinforcing elastodynamic resilient acoustic layer designed for the application of parquet glued with the KILMA FUTURA system.

- Nominal thickness 2 mm
- Supplied in 20 m rolls (covered area 20 m²)
- Compressive strength (CS): 127 kPa (0.5 mm strain)
- Thermal conductivity: = 0,037 W/mK
- Thermal resistance: Rt = 0.054 m²K/W
- Reaction to fire class: Cfl-s1 (3)

Code	Lenght (m)	Width (cm)	Box	Carton	Cat.
41200000	20	100	1	1	30.07

It provides a significant increase in impact sound insulation in both renovations and new constructions.
Can be used in all environments, both residential and tertiary.
Low thickness, does not require changes to existing dimensions.
Low thermal resistance (compatible with underfloor heating systems even when laid under the floor).
Enables glue-in installation of parquet directly onto Kilma Futura with low thickness/low inertia.

Series 483

Corrugated sheath pipe protector.

Can also be used as a pipe protector at the manifold, and at the screed dilation joints (code 472.15.12).

Code	Size	Roll (m)	Box	Carton	Cat.
04832502*	Ø 25	50	1	1	30.07
04833202**	Ø 32	25	1	1	30.07

* Ø sheathed pipe 17x2
** Ø sheathed pipe 20x2 - 25x2.3

Accessory that can be used on Kilma-Isi, Kilma-Graf, Kilma-Rete, Kilma-Industriale and Kilma-Futura radiant systems.

Series 603

Bend former.

90 ° elbow, in polyamide F.V. used as a bend former as well as to protect the pipes close to their attachment to the manifold.

Code	Suitable for pipes	Box	Carton	Cat.
06031812	Ø 17	50	500	30.07
06032012	Ø 20	50	300	30.07
06032502	Ø 25	25	150	30.07

Accessory that can be used on Kilma-Isi, Kilma-Graf, Kilma-Rete, Kilma-Industriale and Kilma-Futura radiant systems.

Series 306

Thermo-electrically controlled servo motor for valve with thermostatic option, complete with valve body clamping swivel and electric power cable.

Normally closed valve position when power missing.

- Power supply 24/230 V
- Consumption 2.5W
- Frequency 50/60 Hz
- IP54 protection rating
- Operating temperature -5 ÷ +50 °C
- 4 mm stroke
- Switch contact rating (0.5A) 1 A (if any)

CERTIFICATIONS:

Code	Power supply	Box	Carton	Cat.
03060002	230V AC	1	50	30.07
03060012	24V AC	1	50	30.07

Version without auxiliary microswitch (2 wires)

Thermo-electrically controlled actuator with auxiliary microswitch

Code	Power supply	Box	Carton	Cat.
03060042	230V AC	1	50	30.07
03060052	24V AC	1	50	30.07

Version supplied with auxiliary microswitch (4 wires)

Servo control can be combined with manifolds interaxis 50 mm series 608 - 2028 - 1410 - 1002 - 279

Series 3189

Thermo-electrically controlled servo motor for valve with thermostatic option, complete with valve body clamping swivel and electric power cable.

Normally closed position when there is no power.

- Power supply 24/230 V
- Consumption 1.2W
- IP54 protection rating
- Operating temperature 0 ÷ +60 °C
- 5 mm stroke
- Cable length 1 m

CERTIFICATIONS:

Code	Power supply	Box	Carton	Cat.
31890002	230V AC	1	100	30.07
31890012	24V AC	1	100	30.07

Version without auxiliary microswitch (2 wires)

Thermo-electrically controlled actuator with auxiliary microswitch

Code	Power supply	Box	Carton	Cat.
31890042	230V AC	1	100	30.07
31890052	24V AC	1	100	30.07

Version supplied with auxiliary microswitch (4 wires)

Servo control to be matched with modular brass SERIES 3202 manifolds with a 37 mm centre distance.
Servo control with a first-open feature to make installation easier. See the instruction manual for details.

Series 778

Vapour barrier.

Roll, sheet in PE with moisture barrier feature.

- Roll width: 1 m
- PE sheet width: 2 m (folded in the middle)
- Roll length: 100 m

Code	Thickness (mm)	Box	Box m²	Cat.
07782002	0,2	1	200	30.07

Accessory that can be used on Kilma-Isi, Kilma-Graf, Kilma-Rete, Kilma-Industriale and Kilma-Futura radiant systems.

Series 472.A

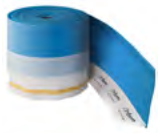

Base edging joint.

Adhesive edging dilation joint, in polythene LPDE foam containing grout.

Code	Height (mm)	Thickness (mm)	Roll (m)	Box	Carton	Cat.
04721512	150	8	60	1	5	30.07
04752512	250	8	60	60	180	30.07

Accessory that can be used on Kilma-Isi, Kilma-Graf, Kilma-Rete and Kilma-Industriale radiant systems.
Adhesive on the full height of the joint.

Series 472.B

Base edging joint.

Adhesive edging dilation joint, in polythene LPDE foam containing grout.

Code	Height (mm)	Thickness (mm)	Roll (m)	Box	Carton	Cat.
04720812	80	5	25	1	1	30.07

Accessory that can be exclusively used on the Futura radiant system.

Series 2531

Sound absorbing L-shaped base edging joint.

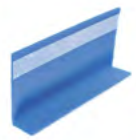

Code	Dim. (mm)	Lenght (m)	Box	Carton	Cat.
25311602	160x50x6*	2	120	120	30.07

* Strip height x width x thickness

High sound-absorbing properties.
To be provided with panel series 3464.

30.07 COMPONENTS FOR RADIANT SYSTEMS | ACCESSORIES FOR RADIANT SYSTEMS

Series 2532

Adhesive joint tape.

Adhesive joint tape which prevents the formation of acoustic bridges between 2 adjacent panels and creates a single insulating layer.

- Tape width 10 cm
- Tape length 25 m
- Thickness 3 mm
- Great sound absorbing properties.
- To be provided with 3464 series panel.

Code	Lenght (m)	Width (cm)	Box	Carton	Cat.
25321002	25	10	1	1	30.07

Series 3670

Screed expansion joint with adhesive base.

- Joint height 100 mm
- Profile length 2 m

Code	Lenght (m)	Box	Carton	Cat.
36701002	2	90	90	30.07

Accessory to be used on Kilma-Graf, Kilma-Isi and Kilma-Rete radiant systems.

Series 468

Pipe fastener clip.

Pipe anchor clip for KILMA panel
Made of plastic with anchoring lugs.

Code	Size	Box	Carton	Cat.
04684512	45x20	1000	10000	30.07
04684500*	45x20	300	300	30.07
04683902**	39x20	1050	1050	30.07
19475702***	56x20	300	300	30.07

* Pack for fixing with special fastener clip tool code 469.00.02 - Clips joined together by heat-sealing
** Pack for fixing with special fastener clip tool code 469.00.02 – Low clip to be used with thin panels (up to 20mm thick). Suitable for fixing pipes maximum ø 17 mm - Pack for fixing with special fastener clip tool code 469.00.02 - Clips joined together by heat-sealing
*** Pack for fixing with special fastener clip tool code 469.00.02 - Clips joined together by heat-sealing

Strong pipe fastener clip

Code	Size	Box	Carton	Cat.
20034202*	42x20	1050	1050	30.07

* Pack for fixing with special fastener clip tool code 469.00.02 - Strong clip to be used with aluminised panels - Clips joined together with adhesive tape

Accessory that can be used on Kilma-Isi and Kilma-Graf radiant systems.

30.07 COMPONENTS FOR RADIANT SYSTEMS | ACCESSORIES FOR RADIANT SYSTEMS

Series 476.A

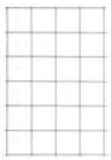

Anti-withdrawal mesh 1.5 mm wire.

Panels made of galvanized electrowelded mesh for heated floor with the function of drastically reducing the formation of any fractures in the concrete screed.
Electrolytic galvanizing.
75 mm overlap and very little waste.

- Size 2x1 m (approx)
- Wire diameter 1,5 mm

Code	Mesh (mm)	Box	Box m²	Carton	Cat.
-	58x58	-	-	-	-
04764002	75x75	1	40,80	20	30.07

* 2mm wire. Available while stocks last

Accessory that can be used on Kilma-Isi, Kilma-Graf and Kilma-Rete radiant systems.
Binding function for concrete screeds.
Supplied in bundles of 20 panels.

Series 825

Mesh fastener clip.

Clip for fixing the mesh to the Kilma panel, made of plastic with anchoring lugs.

- Centre distance 75 mm
- Height 28 mm

Code	Centre distance (mm)	Height (mm)	Box	Carton	Cat.
08250002	75	28	100	4000	30.07

Accessory that can be used on the Kilma-Isi radiant system.

KILMA-THERM

Series 475.A

Super fluidifying additive "KILMA-THERM".

Superfluidifying liquid additive for concrete screeds. Improves workability and performance characteristics. Gives the screed greater mechanical resistance and a higher thermal conductivity.

Code	Weight (kg)	Capacity (l)	Box	Carton	Cat.
04751002	10	9,80	1	60	30.07
04752502	25	24,5	1	24	30.07

Accessory that can be used on Kilma-Isi, Kilma-Graf, Kilma-Rete and Kilma-Industriale radiant systems.
Recommended dose: 1.0÷1.2 Kg additive every 100 Kg of cement.

Series 475.B

Polypropylene short fibre additive for concrete screeds.

Improves the elasticity and resistance of the screed, eliminating the risk of cracks as a result of plastic shrinkage in floors not properly wet cured.
Non-flammable product.
Excellent resistance to acids, bases and chemical agents present in cement mixes.

Code	Weight (kg)	Box	Carton	Cat.
04751012	1	1	25	30.07

Accessory that can be used on Kilma-Isi, Kilma-Graf and Kilma-Rete radiant systems.
Dosage for mixes with average cement content: 0.9 kg/1 m³ of screed.
To restore workability (concrete treated with fibre additive) combine with KILMA-THERM 0.5÷0.7 l/100kg cement.

Series 862.A

Rail for fastening of the pipe.

Profile in plastic, sections of 1m in length which can be hooked together for a custom size.

COMPATIBLE SYSTEMS:
KILMA-INDUSTRIALE

Code	Suitable for pipes	Pitch (mm)	Box	Carton	Cat.
08621600	ø 16 -17	50	80	80	30.07
08621610*	ø 16 -17	50	80	80	30.07
08622000	ø 17 - 20 - 25	100	50	50	30.07
08622010*	ø 17 - 20 - 25	100	50	50	30.07
08622442**	ø 20	50	63	63	30.07

* with fixing adhesive
** with fixing anchors

Accessory that can be used on the Kilma-Industriale radiant system.
Suitable for Kilma-flex polyethylene pipe and Tita-fix multi-layer pipe

Series 476.B

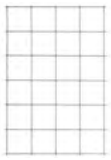

Electro-welded mesh Ø 3 mm for pipe anchoring.

Galvanised electro-welded mesh panels for underfloor heating.

- Size 1200x2100 mm
- Wire diameter 3 mm

Code	Mesh (mm)	Box	Box m²	Carton	Cat.
04761002	100x100	1	40	18	30.07

Accessory that can be used on Kilma-Rete and Kilma-Industriale radiant systems.
Pipe fastener clip anchoring function.
Supplied in bundles of 15 panels.

Series 595.A

Automatic pipe fastener clip for electro-welded mesh Ø 3 mm.

Plastic clip for anchoring the pipe to the electro-welded mesh (Code 476.10.02).
Wire diameter of 3 mm.
Fastening by clip fastener tool.

Code	Suitable for pipes	Box	Carton	Cat.
05950042	ø 17	1700	1700	30.07

Accessory that can be used on the Kilma-Rete radiant system.

Series 595.B

Manual flat pipe fastener clip for electro-welded mesh Ø 3 mm.

Plastic clip for anchoring the pipe to the electro-welded mesh (Code 476.10.02).
Wire diameter of 3 mm.

Code	Suitable for pipes	Box	Carton	Cat.
05950012	ø 17	500	500	30.07

Accessory that can be used on the Kilma-Rete radiant system.

Series 862.B

Rail for fastening of the pipe.

Profile in plastic, sections of 900 mm in length which can be hooked together for a custom size.

Code	Suitable for pipes	Pitch (mm)	Box	Carton	Cat.
08621000	Ø 10	60	6	150	30.07

Series 595.C

Manual pipe fastener clip for electro-welded mesh Ø 3 mm.

Plastic clip for anchoring the pipe to the electro-welded mesh (Code 476.10.02).
Wire diameter of 3 mm.

Code	Suitable for pipes	Box	Carton	Cat.
05950000	ø 17 - 20	200	200	30.07

Accessory to be used on Kilma-Rete and Kilma-Industriale radiant systems.

Series 595.D

Manual pipe fastener clip for electro-welded mesh Ø 6 mm.

Clip made of plastic for anchoring the pipe to the electro-welded mesh.
Wire diameter of 6 mm.

Code	Suitable for pipes	Box	Carton	Cat.
05950022	ø 20	200	200	30.07
05950052	ø 25	100	100	30.07

Accessory that can be used on the Kilma-Industriale radiant system.

Series 470

Fixing clamp.

Clamp made of plastic for fastening the pipe to the electro-welded mesh (Cod.

Code	Size A	Box	Carton	Cat.
04700002	x	1000	1000	30.07

Accessory that can be used on the Kilma-Industriale radiant system.

Series 1200

Pipe clip for mesh.

Ideal to fasten the pipe (up to Ø 25) to the industrial mesh (max Ø 8 ÷ 10 mm).

Code	Suitable for pipes	Box	Carton	Cat.
12000002	up to Ø 25	50	2000	30.07

Accessory that can be used on the Kilma-Industriale radiant system.

Series 1333

Double mesh spacer.

The ideal solution to assure maximum grip of the metal structure inside the castings, for increased resistance to compression.
It ensures that the structure is raised from the bottom (3 cm) and that there is an excellent distance between the two meshes (6 cm) and the PE-X pipes.

Code	Lenght (mm)	Height (mm)	Box	Carton	Cat.
13330002	150	95	1800	1800	30.07

Pack: 1800 pcs. on pallet wrapped with PE film.

Accessory that can be used on the Kilma-Industriale radiant system.

Series 2018

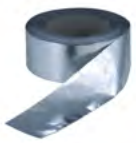

Anodised aluminium adhesive tape.

Aluminium adhesive tape to prevent the formation of acoustic bridges between 2 adjacent panels and to create a single insulating layer.

- Tape width 5 cm
- Tape length 50 m

Code	Lenght (m)	Width (cm)	Box	Carton	Cat.
20180002	50	5	1	24	30.07

For use on the head joints of Kilma-Roll rolled panels, Kilma Reel and Futura system.

KILMA FUTURA AD

Series 3702

Adhesive.

Gluing function of Kilma-Futura panels on existing substrate support.

Code	Weight (kg)	Box	Carton	Cat.
37020002	1	1	1	30.07

Accessory that can be exclusively used on the Kilma-Futura radiant system.
Average use 0.10 ÷ 0.15 kg/m².

PRIMER MF BY MAPEI®

Series 3055

Epoxy primer.

Waterproofing and protection of the aluminised surface of the panel and piping in case of subsequent laying of flooring with cement-based glues or self-levelling screeds.

Supplied as a kit consisting of 1 3-kg box (primer) + 1 1-kg box (reagent).

Code	Box	Carton	Cat.
30550012	1	1	30.07

Accessory that can be used on the Futura radiant system.
Average use 0.2 kg/m².

Series 832

Axial pressure gauge.

Pressure gauge for automatic Alinox feeder.

Code	Size	Scale (bar)	Box	Carton	Cat.
00832005	1/8" - Ø 40	0 ÷ 10	1	1	30.07

Series 3597

Compression fitting for polyethylene pipes, specifically designed for 3201 - 3202 - 3615 - 3616 series manifolds.

Brass nut, core and pipe clamping ogive.
Nickel plated nut.
Elastomer seal ring.
Standard RBM threaded F connection.

- Max operating temperature 95 °C
- Max operating pressure 10 Bar

Code	Size	Size	Box	Carton	Cat.
35971600	16x2	RBM - 16	10	100	30.07
35971700	17x2	RBM - 17	10	100	30.07

Standard RBM thread W 24.5x19 F
Size: Outside Ø x pipe thickness

Fitting to be combined exclusively with compact modular brass manifolds 37mm wheelbase series 3201.A - 3201.B - 3201.C - 3202.A - 3202.B

Serie 450.A

Air and water manual discharge terminal unit.

Code	Size	Box	Carton	Cat.
04500600	1"	1	10	30.07
04500700	1"1/4	1	10	30.07

Series 910

By-pass group with rotatable elbow fittings for the system filling.

It consists of (loose pieces) :
Automatic air vent;
By-pass adjustment group;
Fittings and connection pipe.

- G 1/8" pressure gauge holder connection (for RBM Ø 40 radial pressure gauge - scale 0÷10 bar - Code 832.005)

Code	Size	Box	Carton	Cat.
09100600	1"	1	1	30.07

For 1002 series manifold kits and Kilma controllers (Evo, Easy, Eco, Basic)

It allows for by-pass fixed adjustment.

Series 217.B

Polyethylene pipe fitting.

Euroconus G3/4" connection (UNI-EN-ISO 228)

CERTIFICATIONS:
DHW

Code	Size	Size	Box	Carton	Cat.
02171600	16x2	G 3/4" 16 EK	10	100	30.07
02171700	17x2	G 3/4" 17 EK	10	100	30.07
02172000	20x2	G 3/4" 20 EK	10	100	30.07

Size: Outside Ø x pipe thickness

KOMO certified diameter 16x2 – 17x2 and 20x2 fittings available. Contact our sales department for the ordering codes.

Series 224.B

Compression fitting for multilayer pipe.

Euroconus G3/4" connection (UNI-EN-ISO 228)

CERTIFICATIONS:
DHW

Code	Size	Size	Box	Carton	Cat.
02241600	16x2	G 3/4" 16 EK	10	100	30.07
02242000	20x2	G 3/4" 20 EK	10	100	30.07

Size: Outside Ø x pipe thickness

Series 8579

MM 1" connection fitting.

Suitable for connecting 2 1" manifolds to reach the number of required junctions.

Code	Size	Box	Carton	Cat.
08579003	1"	1	10	30.07

Series 208

Flow meter to measure the flow rate of single circuit directly.

Euroconus F threaded swivel connection for connection to manifold.
Euroconus M threaded straight connection for fittings for copper, polyethylene, multilayer pipe.

- Scale 0÷5 l/min
- Reading precision ±10%

Code	Size	Box	Carton	Cat.
02080510	G 3/4" - EK	10	10	30.07

Series 311.B

Y-shaped fitting to split copper, polyethylene and multilayer metal-plastic circuits.

Euroconus G3/4" swivel threaded connection (UNI-EN-ISO 228)
Standard RBM split threaded connections W24.5x19F
Nickel-plated brass body.
Elastomer seals.

- Max operating temperature 100 °C
- Max operating pressure 10 Bar

CERTIFICATIONS:
DHW

Code	Size A	Size B	Box	Carton	Cat.
03110500	G 3/4" - EK	RBM	10	10	30.07

Allows to split circuits deriving from Euroconus manifolds.
Use fittings with RBM Standard thread for pipe connection.

Series 215

Straight adjustment lockshield for junction circuits from Euroconus manifolds.

Euroconus F threaded swivel connection for connection to manifold.
Euroconus M threaded straight connection for fittings for copper, polyethylene, multilayer pipe.

Code	Size	Box	Carton	Cat.
02150550	G 3/4" - EK	10	10	30.07

Series 267

Straight valve with thermostatic option for junction circuits from Euroconus manifolds.

Euroconus F threaded swivel connection for connection to manifold.
Euroconus M threaded straight connection for fittings for copper, polyethylene, multilayer pipe.

Code	Size	Box	Carton	Cat.
02670550	G 3/4" - EK	10	10	30.07

Can be coupled to RBM 306 series electrothermal servomotors

Series 3930

Reversible ball valve

Nickel-plated brass body.
Thick chrome plated brass ball.
Elastomer gaskets.
UNI-EN-ISO 228 MF connections.

- Operating temperature with water 20 ÷ +120°C

Code	Size	Box	Carton	Cat.
39300600	1"	2	20	30.07

Series 451

In line fitting with thermowell and socket and dial thermometer to check the manifold's temperature.

Threaded line connections MF UNI-EN-ISO 228

- Thermometer scale 0÷80 °C

Code	Size	Box	Carton	Cat.
04510600	1"	10	10	30.07
04510700	1"1/4	10	10	30.07

Series 7469

Pressure gauge ø 40. For pressure control.

- Scale 0 ÷ 16 Bar (radial pressure gauge).
- Scale 0 ÷ 10 Bar (axial pressure gauge).

Code	Size	Box	Carton	Cat.
07469005	1/8"	1	1	30.07

Series 793

Joint connection for aligning zone valve.

Threaded line connections MF UNI-EN-ISO 228

Code	Size	Box	Carton	Cat.
07930600	1"	1	1	30.07

For the fitting of the zone valve, when using misaligned brackets cod. 792.06.00 or else 1528.06.00

Series 1529

By-pass group with rotatable elbow fittings for the system filling.

It consists of (loose pieces) :
Automatic air vent;
By-pass adjustment group;
Fittings and connection pipe.

- G 1/8" pressure gauge holder connection (for RBM Ø 40 radial pressure gauge - scale 0÷10 bar - Code 832.005)

Code	Size	Box	Carton	Cat.
15290600	1"	1	1	30.07

For manifold kit series 1410.A, 1410.B, 1410.C, 608, 2028.A, 2028.C.

It allows for by-pass fixed adjustment.
For connection to manifolds series 608 and 1410.A, please also include the fitting code 9300600.

Series 3786

Insulation shell for series 1529 bypass, made of expanded polyethylene half-bearings with external antiscratch coating.

Fire behaviour class I
Density 33 kg/m³
Max operating temperature -40 ÷ +90 °C

Code	Size	Box	Carton	Cat.
37860000	1"	1	1	30.07

Series 114.C

Motorised zone valve, 4-way, with 220 mm extension lead.

Threaded connections FF UNI-EN-ISO 228
Complete with adjustable micrometric bypass.

- Centre distance 220÷225 mm
- Misalignment 33 mm

BIM

Code	Size	Model	Box	Carton	Cat.
01140630	1"	Zone 4	1	1	30.07

Prepared for 360 series and 373 series servocontrols

Series 1360

Polyethylene pipe fitting.

1" F connection (UNI-EN-ISO 228)

Code	Size	Box	Carton	Cat.
13600010	20x2	10	40	30.07
13600030	25x2,3	10	40	30.07

Size: Outside Ø x pipe thickness

Fitting that can be combined with Kilma High Flow manifold kit 1349 series

Series 1095

Brass sealing cap with o-ring for pressurising system with air.

Code	Component	Pump	Size	Size	Model	Description	Assembly	Roll (m)	Box	Carton	Cat.

For use only on the air vent valves model Vasa - VasaTre.

30. RADIANT CLIMATE CONTROL SYSTEMS

30.08 TERMOREGULATION

Thermostats, programmable thermostats and room humidity regulator

ELECTROMECHANICAL ROOM THERMOSTAT

Series 386

Electromechanical room thermostat. Wall-mounted installation. White. Summer-Winter selector.

Setting range 5÷30 bar
Thermal differential 1.3°C (± 0.2°C)
Wall-mounted.
Size mm (lxhxd.): 83.7x82.9x30.9
Electrical protection rating: IP20

CERTIFICATIONS:

Code	Control	Colour	Box	Carton	Cat.
03860022	Daily	White	1	1	30.08

Wall mounted.

DIGITAL ELECTRONIC ROOM CHRONOTHERMOSTAT

Series 2726

Digital electronic room chronothermostat.The temperature can be programmed at any time of day and for each day of the week. Wall-mounted installation. Summer-Winter switchover.

- Power supply: 3 x 1.5V AAA alkaline batteries (not included)
- Type of setting ON/OFF or proportional
- Setting range 2÷37.7°C
- Temperature resolution 0.1°C
- Fixed thermal differential 0.3°C
- Minimum programming interval 1 hour
- 4 operating temperatures: Comfort - Economy
- Manual - Off
- Programming: 7 programmes for winter operation (editable) and 7 programmes for summer operation (editable).
- Size mm (lxhxd.): 123x86x23
- Electrical protection rating: IP40

CERTIFICATIONS:

Code	Control	Colour	Box	Carton	Cat.
27260012	Weekly	White	1	1	30.08

Wall mounted.

ELECTRONIC ROOM THERMOSTAT

Series 1552

Electronic ambient thermostat recessed installation.Summer-Winter-Off selector.

- Power supply: 2 x 1.5V AAA alkaline batteries (not included)
- Mode: summer/winter/off
- Temperature setting:
- ON/OFF with fixed differential 0.3°C
- proportional with 0.8°C band and 8 min time base.
- proportional with 1.5°C band and 15 min time base.
- Temperature setting: 5÷35°C
- (Fixed) differential: 0-3°C
- Operating temperature: 0÷50°C
- Storage temperature: -10÷+60°C
- Operating humidity: 20÷90% RH (non-condensing)
- Electrical protection rating: IP40
- Interchangeable front panel available in two colours: white and anthracite grey (included in the package)

CERTIFICATIONS:

CE

Code	Control	Colour	Box	Carton	Cat.
15520002	Daily	White/Charcoal	1	1	30.08

Flush mount installation in 503 box.
Compatibility with civil series plates
ABB S.p.a.: Chiara, Mylos.
AVE S.p.a.: S44.
BTICINO S.p.a.: Axolute, Light, Light Tech, Living, Livinglight, Luna, Matix.
GEWISS S.p.a.: Chorus.
VIMAR S.p.a.: Eikon, Eikon Evo, Idea, Plana, Arke

Series 1553

Digital electronic room chronothermostat.The temperature can be programmed at any time of day and for each day of the week. Recessed installation. Summer-Winter switchover.

- Power supply: 2 x 1.5V AAA alkaline batteries (not included)
- Mode: summer/winter/off
- Temperature setting: 2÷35°C
- Differential (adjustable): 0.1 ÷ 1 °C
- Operating temperature: 0 ÷ 50 °C
- Antifreeze temperature: 1 ÷ +10 °C, can be disabled
- Storage temperature: -10 ÷ +65 °C
- Operating humidity: 20÷90% RH (non-condensing)
- Electrical protection rating: IP40
- Interchangeable front panel available in two colours: white and anthracite grey (included in the package)

CERTIFICATIONS:

CE

Code	Control	Colour	Box	Carton	Cat.
15530002	Weekly	White/Charcoal	1	1	30.08

Flush mount installation in 503 box.
Compatibility with civil series plates
ABB S.p.a.: Chiara, Mylos.
AVE S.p.a.: S44.
BTICINO S.p.a.: Axolute, Light, Light Tech, Living, Livinglight Luna, Matix.
GEWISS S.p.a.: Chorus.
VIMAR S.p.a.: Eikon, Eikon Evo, Idea, Plana, Arke.

UMICLIMA TOUCH SCREEN

Series 2295

Wall mounted digital electronic ambient programmable thermostat with humidity sensor.

- Power supply 2 AAA 1.5V alkaline batteries
- Autonomy (Stand-by): 2 years
- Automatic battery discharge control with 2 intervention thresholds
- Graphical display of set temperature, time, measured temperature, measured relative humidity and calculated dew point
- Temperature control
- Second relay for dehumidifier summer intervention control based on dew temperature control
- LCD touch screen display
- Battery replacement without loss of data within 1 minute
- Setting range: 5°C to 30°C in WINTER programme, 15°C to 35°C in SUMMER programme
- Setting pitch: 0.2°C
- Adjustable thermal differential: 0.2 to 2.0°C (intervention range + 0.1°C to +1.0°C)
- Possibility of programming any temperature within the setting ranges at any half-hour of the day for each day of the week
- Contacts capacity: 230Vac - 5A (resistive load)
- Wall mounted
- Dimensions (LxHxD): 123.5x83.5x31mm
- Available colours: white or anthracite grey
- Class 1 temperature control device
- Contribution of the temperature control device to the seasonal efficiency of room heating: 1%. (in accordance with Directive 2010/30/EC Regulation 811/2013/EU)

CERTIFICATIONS:

CE

Code	Model	Colour	Box	Carton	Cat.
22950022	UMICLIMA TOUCH	White	1	1	30.08
22950032	UMICLIMA TOUCH	Black	1	1	30.08

Wall mounting or covering flush-mounted box 503.
Suitable for controlling room temperature and relative humidity. It also enables siciency control of room dew temperature.

UMIDAY-V AMBIENT HUMIDISTAT

Series 2294

Ambient humidistat.

- Power supply: 230Vac 50/60 Hz
- Absorption: 4Va (0.5W)
- Output with bistable relay 5(3)A/250Vac
- Setting range: 30÷90% RH
- Minimum time between one switchover and the next: 1 minute
- Operating temperature: 0÷50°C
- Storage temperature: +0÷+60°C
- Electrical protection rating: IP40
- Interchangeable front panel available in two colours: white and anthracite grey (included in the package)
- Selector with two positions: off and automatic

CERTIFICATIONS:

CE

Code	Colour	Box	Carton	Cat.
22940032	White/Charcoal	1	1	30.08

Flush mount installation in 503 box.
Suitable for room relative humidity control and adjustment.
Compatibility with civil series plates
ABB S.p.a.: Chiara, Mylos.
AVE S.p.a.: S44.
BTICINO S.p.a.: Axolute, Light, Light Tech, Living, Livinglight, Luna, Matix.
GEWISS S.p.a.: Chorus.
VIMAR S.p.a.: Eikon, Eikon Evo, Idea, Plana, Arke

RBM

06. SERVICE

GROUP		CATEGORY		LINE	
60. Service	384	**60.01** Service	385	Spare parts	385

Series 1213

Radial pressure gauge.

Pressure gauge for pressure reducing valves and self-cleaning filters.

Code	Size	Scale (bar)	Box	Carton	Cat.
01213005	1/4" - Ø 50	0 ÷ 16	1	280	60.01

*Spare part for self-cleaning filter series 126

Series 8188

Radial pressure gauge for Filler feeder series 39 – 3153

Pressure gauge for automatic Filler feeders.

Code	Size	Scale (bar)	Box	Carton	Cat.
08188005*	1/8" - Ø 40	0 ÷ 4	1	1	60.01

* Pressure gauge for Filler feeder series 39 – 3153

Series 2549

Axial pressure gauge with red index.

Pressure gauge for standards safety relief valves.

Code	Size	Scale (bar)	Box	Carton	Cat.
02549005	1/4" - Ø 50	0 ÷ 4	1	1	60.01
02574005	1/4" - Ø 50	0 ÷ 10	1	1	60.01

Series 380

Adjustable contact thermostat with spring-loaded pipe clamp.

- Temperature range +20 ÷ +90°C
- Differential 8±3K
- Electrical protection rating IP30
- Thermal gradient <1K/min.
- Maximum head temperature 80°C
- Storage temperature -15 ÷ +60°C
- Contact capacity 16(2.5)A 250V 2.5A 250V
- M20x1.5 fairlead
- Installation on piping

Code	Box	Carton	Cat.
03800002	1	1	60.01

Series 383

Immersion thermostat with manual reset.

- Triggering temperature (fixed setting): Min. 50 - Max. 120°C
- Fixed setting 100°C
- Triggering tolerance +0/-6°C
- Control head temperature limit 85°C
- Electrical protection rating IP43
- 1/2" conduit connection
- Contact capacity 16(4)A 250V

CERTIFICATIONS:
PED

Code	Box	Carton	Cat.
03830002	1	1	60.01

Spare part for 3603 Series RBM instrument holder manifold

Series 382

Dual immersion thermostat with thermometric conduit, including a manual reset locking thermostat and a regulation thermostat.

- Operating range: Min. 0 - Max. 120°C
- Triggering tolerance: Min. T ±6°C – Max T ±4°C
- Triggering temperature (fixed setting): Min. 50 - Max. 120°C
- Fixed setting 100°C
- Triggering tolerance +0/-6°C
- Control head temperature limit 85°C
- Electrical protection rating IP43
- Contact capacity 16(4)A 250V

Code	Box	Carton	Cat.
03820002	1	1	60.01

Accessory for 3603 Series RBM instrument holder manifold

Series 625

Safety pressure switch, used to protect, command and control pressure in heating systems.

- Setting range 2 ÷ 5.5 bar
- Minimum differential for reset 0.6 bar
- Maximum sensitive element pressure: 7 bar
- Maximum controlled fluid temperature 120°C
- Allowed pressure switch body temperature: -35 ÷ +80°C
- Electrical protection rating IP44
- G 1/2"F connection with dome

CERTIFICATIONS:
PED

Code	Size	Calibration (bar)	Box	Carton	Cat.
06250200	1/2"	2 ÷ 5,5	1	1	60.01

Spare part for 3603 Series RBM instrument holder manifold

Series 2240

Low pressure switch with manual reset, used to command and control pressure in heating systems.

- Setting range 0.5 ÷ 2.5 bar
- Minimum differential for reset 0.5 bar
- Factory setting 0.5 bar
- Maximum sensitive element pressure 6 bar
- Maximum controlled fluid temperature 120°C
- Allowed pressure switch body temperature: -35 ÷ +80°C
- Electrical protection rating IP44
- G 1/2"F connection with dome

Code	Size	Calibration (bar)	Box	Carton	Cat.
22400200	1/2"	0,5 ÷ 2,5	1	1	60.01

Spare part for 3603 Series RBM instrument holder manifold

Series 636

Thermometer. Compliant with INAIL requirements.

- Scale 0÷120°C
- Precision class 2
- G 1/2" radial connection

Code	Size	Scale (°C)	Box	Carton	Cat.
06360050	1/2"	0 ÷ 120	2	1	60.01

Spare part for 3603 Series RBM instrument holder manifold
Well included in supply

Series 626

Radial pressure gauge. Compliant with INAIL requirements.

- G 1/4" radial connection

Code	Size	Scale (bar)	Box	Carton	Cat.
06260200	1/4"	0 ÷ 4	1	1	60.01
06260210*	1/4"	0 ÷ 6	1	1	60.01
06260220	1/4"	0 ÷ 10	1	1	60.01

* Pressure gauge supplied with the instrument holder manifold

Spare part for 3603 Series RBM instrument holder manifold

Series 3604

Control probe holder for thermometer. Compliant with INAIL requirements.

- G 1/2" threaded connection

Code	Size	Box	Carton	Cat.
36040402	1/2"	1	1	60.01

Spare part for 3603 Series RBM instrument holder manifold

Series 891

Spare float unit for "Vasa" - "VasaTre" automatic air vent valves.

Including:
- Cap complete with float;
- Lever;
- Rod;
- Protection cap;
- Plastic protection cap, with venting holes.

Code	Size	Box	Carton	Cat.
08910000	U	10	10	60.01

U = Universal

Series 875.A

Complete cap assembly for thermostat valves and compact polymer and brass manifolds.

Code	Figure	Box	Carton	Cat.
00875003*	1	1	1	60.01
00875023*	2	1	1	60.01
35170002**	3	1	1	60.01

*Cap unit suitable for valve size 3/8" - 1/2" - 3/4"
**Brass cap unit suitable for valve size 1"

761 series

Complete cap unit for valves with thermostatic option with pre-adjustment.

6 adjustment positions.
Brass cap unit suitable for valve size 3/8" - 1/2" - 3/4" - 1"

Code	Box	Carton	Cat.
07613013	1	1	60.01

Series 426

Nut and spherical fitting for iron and copper valves, with O-Ring.

Code	Size	Box	Carton	Cat.
00426013	3/8"	1	1	60.01
00429013	1/2"	1	1	60.01

Series 3518

Kit with nut, spherical fitting and probe for series 3101 thermostatic single/double pipe valves.

Kit inclusive of:
- Nut;
- Spherical fitting;
- Flat seat gasket;
- Probe guide;
- L110 mm standard length probe.

Code	Size	Box	Carton	Cat.
35180402	1/2"	1	1	60.01
35180502	3/4"	1	1	60.01
35180602	1"	1	1	60.01
10111005*	1" SX	1	1	60.01

* Stem only

Series 307

Wrench for spherical fittings.

Code	Size	Description	Figure	Box	Carton	Cat.
03070000	3/8" - 1/2"	-	1	5	5	60.01
03070010	-	Monoflux - Uniflux	2	1	1	60.01

Series 3097

Hand wheel for thermostatically controlled valve.

Code	Size	Box	Carton	Cat.
03097003	U	1	1	60.01

U = Universal

Series 2587

Hand wheel for manual valve.

Hand wheel for manual valve, white version

Code	Size	Figure	Box	Carton	Cat.
02587093	3/8" - 1/2"	1	1	1	60.01
00331013	3/4"	2	1	1	60.01
00332013	1"	2	1	1	60.01
00333013	1"1/4	2	1	1	60.01

Hand wheel for manual valve, chrome-plated version

Code	Size	Figure	Box	Carton	Cat.
2587.053	3/8" - 1/2"	3	1	1	60.01
2587.083	3/8" - 1/2"	4	1	1	60.01

Hand wheel for manual Jet-line valve, white version

Code	Size	Figure	Box	Carton	Cat.
03512005	3/8" - 1/2" Jet-line	5	1	1	60.01

Series 2711

Cap for lockshield valve.

Cap for lockshield valve, white version

Code	Size	Box	Carton	Cat.
02711005	3/8" - 1/2"	1	1	60.01
02711095	3/8" - 1/2"	1	1	60.01
03511005*	3/4" - 1" - 1"1/4	1	1	60.01

* Valid also for Jet-line series lockshields.

Cap for lockshield valve, chrome-plated version

Code	Size	Box	Carton	Cat.
02711055	3/8" - 1/2"	1	1	60.01
02711085	3/8" - 1/2"	1	1	60.01

Cap for Jet-line lockshield valve, white version

Code	Size	Box	Carton	Cat.
3511.005*	3/4" - 1" - 1"1/4	1	1	60.01

Series 2440

Complete adjustment unit for "Mono-Zona" 433 series manifold zone valve

Code	Box	Carton	Cat.
02440013	1	1	60.01

Series 2343.B

Cap unit plus screw for zone valves.

Code	Size	Box	Carton	Cat.
02343003	U	1	1	60.01

U = Universal

Series 8780.A

1/2" screw unit to be adjusted with butterfly handwheel.

For Domestic Monoblock D.S. manifold

Code	Size	Figure	Box	Carton	Cat.
08780005	1/2"	1	1	1	60.01

Series 8780.B

1/2" screw unit with screwdriver adjustment.

For Domestic Monoblock D.S. manifold

Code	Box	Carton	Cat.
08780015	1	1	60.01

Series 929

Complete plastic box for the Domestic Monoblock D.S. manifold

Domestic Monoblock D.S. water system manifold box 5+3 branches

Code	Model	Box	Carton	Cat.
92900003*	CFF	1	1	60.01
92900013**	CCF	1	1	60.01

* Part specific for manifold code 967.00.00
** Part specific for manifold code 967.00.10

Domestic Monoblock D.S. water system manifold box 6+4 branches

Code	Model	Box	Carton	Cat.
92900053*	CFF	1	1	60.01
92900063**	CCF	1	1	60.01

* Part specific for manifold code 903.00.50
** Part specific for manifold code 903.00.60

Series 2155

Screw for closing plastic box cover

Code	L (mm)	Box	Carton	Cat.
02155035	35	1	1	60.01
02155005	60	1	1	60.01

Series 8167

Complete cartridge for RinoxPlus M RinoxPlusSmart M diaphragm pressure reducing valve.

Code	Size	Box	Carton	Cat.
08167003	1/2" - 3/4"	1	1	60.01
08201003	1"	1	1	60.01
08202003	1"1/4	1	1	60.01
08203003	1"1/2 - 2"	1	1	60.01

Series 7367

Filter for RinoxPlus M and RinoxPlusSmart M diaphragm pressure reducing valve.

Code	Size	Box	Carton	Cat.
07367005	1/2" - 3/4"	1	1	60.01
07387005	1"	1	1	60.01
07401005	1"1/4	1	1	60.01
07403005	1"1/2 - 2"	1	1	60.01

Series 8454

Cartridge for automatic flow control valve.

Manual cartridge.

Code	Colour	Flow rate (m^3/h)	Box	Carton	Cat.
08454005	B	0,100 - 0,412	1	1	60.01
08454015	G	0,157 - 0,609	1	1	60.01
08454025	RW	0,275 - 0,825	1	1	60.01
08454055	RG	0,406 - 1,270	1	1	60.01

B = Black
G = Green
RW = Red - b. white
RG = Red - b. grey

Series 8455

Cartridge for pressure independent control valve.

Cartridge can be motorised.

Code	Colour	Flow rate (m³/h)	Box	Carton	Cat.
08455005	G	0,057 - 0,575	1	1	60.01
08455055	B	0,064 - 1,110	1	1	60.01

G = O.R. Grey
B = O.R. Black

Series 8852

Cartridge for differential pressure control and regulating valve.

Code	DP (kPa)	Flow rate (m³/h)	Box	Carton	Cat.
08852025	20	0,050 - 0,960	1	1	60.01
08852035	30	0,050 - 1,419	1	1	60.01

Series 3238

Adaptor ring nut connection M28x1.5 / M30x1.5 to couple thermostatic head.

Code	Box	Carton	Cat.
32380002	1	1	60.01

Spare part for Fixed Point DN25 booster module series 3198 and series 3235

Series 590.B

Thermostatic control for fixed point mixing units and zone modules.

- Temperature adjustment range: 25÷52 °C (Model TL50) / 40÷70 °C (Model TL70S)

Code	Model	Box	Carton	Cat.
05900050*	TL50	1	1	60.01
32180012*	TL70 M	1	1	60.01
32180002**	TL70 S	1	1	60.01

*Connection M30x1.5
** Connection M28x1.5

Spare part for Fixed Point (FR) DN25 booster module
Specific accessory for Micromega MIX series 3240.

Series 3244

Safety thermostat.

Code	Box	Carton	Cat.
32440002	1	1	60.01

Spare part for Fixed Point DN25 booster module series 3198 and series 3235

Series 8519

Cartridge for MG1 magnetic sludge remover filter.

Cartridge for MG1 magnetic sludge remover filter (800 µm)

Code	Size	Box	Carton	Cat.
08519015	3/4"	1	1	60.01

Cartridge for MG1 magnetic sludge remover filter (400 µm)

Code	Size	Box	Carton	Cat.
08519035	3/4"	1	1	60.01

Series 1041

Cartridge for line filter.

Cartridge for line filter (800 µm)

Code	Size	Box	Carton	Cat.
01041005	3/8" - 1/2"	1	1	60.01
00929005	3/4"	1	1	60.01
00959005	1"	1	1	60.01
00930005	1"1/4	1	1	60.01
00931005	1"1/2 - 2"	1	1	60.01
01156003	2"1/2 - 3" - 4"	1	1	60.01

Cartridge for line filter (300 µm)

Code	Size	Box	Carton	Cat.
1041.015	3/8" - 1/2"	1	1	60.01
9290.15	3/4"	1	1	60.01
9590.15	1"	1	1	60.01
9300.15	1"1/4	1	1	60.01
9310.15	1"1/2 - 2"	1	1	60.01
1156.013	2"1/2 - 3" - 4"	1	1	60.01

Cartridge for line filter (100 µm)

Code	Size	Box	Carton	Cat.
1041.055	3/8" - 1/2"	1	1	60.01
9290.55	3/4"	1	1	60.01
9590.55	1"	1	1	60.01
9300.55	1"1/4	1	1	60.01
9310.55	1"1/2 - 2"	1	1	60.01

Cartridge for line filter (50 µm)

Code	Size	Box	Carton	Cat.
1041.025	3/8" - 1/2"	1	1	60.01
9290.25	3/4"	1	1	60.01
9590.25	1"	1	1	60.01
9300.25	1"1/4	1	1	60.01
9310.25	1"1/2 - 2"	1	1	60.01
1156.023	2"1/2 - 3" - 4"	1	1	60.01

Spare part for line filters Series 3 - 4.

Series 6065

Cartridge for Y-shaped filter.

Cartridge for Y-shaped filter (800 µm)

Code	Size	Box	Carton	Cat.
06065005	1/2"	1	1	60.01
06062005	3/4"	1	1	60.01
06059005	1"	1	1	60.01
06068005	1"1/4	1	1	60.01
06071005	1"1/2	1	1	60.01
06074005	2"	1	1	60.01

Cartridge for Y-shaped filter (300 µm)

Code	Size	Box	Carton	Cat.
06065015	1/2"	1	1	60.01
06062015	3/4"	1	1	60.01
06059015	1"	1	1	60.01
06068015	1"1/4	1	1	60.01
06071015	1"1/2	1	1	60.01
06074015	2"	1	1	60.01

Cartridge for Y-shaped filter (100 µm)

Code	Size	Box	Carton	Cat.
06065055	1/2"	1	1	60.01
06062055	3/4"	1	1	60.01
06059055	1"	1	1	60.01
06068055	1"1/4	1	1	60.01
06071055	1"1/2	1	1	60.01
06074055	2"	1	1	60.01

Spare part for Y-shaped filter Series 858.

Series 1171

Self-cleaning filter cartridge.

Cartridge for self-cleaning filter (800 µm)

Code	Size	Box	Carton	Cat.
01171003	3/8" - 1/2"	1	1	60.01
01172003	3/4"	1	1	60.01
01173003	1"	1	1	60.01
01200003	1"1/4	1	1	60.01
01201003	1"1/2 - 2"	1	1	60.01
01215003	2"1/2 - 3" - 4"	1	1	60.01

Self-cleaning filter cartridge (300 µm)

Code	Size	Box	Carton	Cat.
1171.013	3/8" - 1/2"	1	1	60.01
1172.013	3/4"	1	1	60.01
1173.013	1"	1	1	60.01
1200.013	1"1/4	1	1	60.01
1201.013	1"1/2 - 2"	1	1	60.01
1215.013	2"1/2 - 3" - 4"	1	1	60.01

Self-cleaning filter cartridge (100 µm)

Code	Size	Box	Carton	Cat.
1171.023	3/8" - 1/2"	1	1	60.01
1172.023	3/4"	1	1	60.01
1173.023	1"	1	1	60.01
1200.023	1"1/4	1	1	60.01
1201.023	1"1/2 - 2"	1	1	60.01
1215.023	2"1/2 - 3" - 4"	1	1	60.01

Spare part for self-cleaning filter Series 126.

Series 3696

Metal cover and frame for unit boxes Kilma-Evo, Kilma-Econblock, Kilma-Basic2 and Kilma-Easy2.

Code	LxH (mm)	Box	Carton	Cat.
36968052	800 x 580	1	1	60.01
36961052	1000 x 580	1	1	60.01
36961252	1200 x 580	1	1	60.01

Spare part for box series 9241

Series 2606.B

Plastic cover for BOX1 boxes.

Code	LxH (mm)	Box	Carton	Cat.
26064000	400 x 500	1	1	60.01
26066000	600 x 500	1	1	60.01
26068000	800 x 500	1	1	60.01
26061000	1000 x 500	1	1	60.01

Use 5 plastic screws series 2155 to fasten cover (see page 392)

Series 2261

Plastic cover for Quickbox boxes.

Code	LxH (mm)	Box	Carton	Cat.
22615502	550 x 450	1	1	60.01
22617002	700 x 450	1	1	60.01
22618502	850 x 450	1	1	60.01

Use 6 plastic screws series 2155 to fasten cover.

Series 4566

Mixing unit with by-pass.

For Kilma-Evo-RF and Kilma-Evo-RM control units.

Code	Box	Carton	Cat.
04566003	1	1	60.01

Series 875.B

Cap group and rod/ring nut group.

For mixing unit code 4566.003

Cap group

Code	Box	Carton	Cat.
00875033	1	1	60.01

Rod/ring nut group

Code	Box	Carton	Cat.
04622003	1	1	60.01

To be combined with mixing unit series 4566 for Kilma Evo RF and Kilma Evo RM mixing units

Series 8041

Modulating actuator.

For Kilma-Evo-RM control unit.

- 24V AC 0÷10V power supply

Code	Box	Carton	Cat.
08041005	1	1	60.01

To be combined with 4566 series mixing assembly for Kilma Evo RM, Kilma Easy 2 and Kilma Basic mixing controllers

Series 373.B

Modulating actuator.

For Kilma-Evo-RM control unit.

- 230V AC power supply
- 4W consumption
- Frequency 50Hz
- Electric protection IP42
- Operating temperature -5 ÷ +60 °C
- Triggering time 240 seconds

CERTIFICATIONS:

CE

Code	Box	Carton	Cat.
03730020	1	1	60.01

Series 3612

Digital electronic temperature controller with climatic compensation function.

For Kilma-Evo-RM - Kilma Basic2 control unit.

CERTIFICATIONS:

Code	Model	Box	Carton	Cat.
36120002	Kilma EVO2 HC	1	1	60.01

Series 2001

Fixed-point electrical unit.

Electric control unit for electrical power supply of the thermostat, the pump and the safety thermostat;
contact without power supply (potential-free contact).

Including housing box, pump connection cable and safety thermostat connection.

CERTIFICATIONS:

Code	Model	Box	Carton	Cat.
20010000*	Without Microprocessor	1	1	60.01
20010060**	With Microprocessor	1	1	60.01

* Suitable for polymer Econblock RF control units.
Suitable for RF copper control units and sub-control units.

Series 577

Fixed-point electrical board.

Electrical circuit for the thermostat, pump, safety thermostat power supply connection; free-voltage contact (potential-free contact).

CERTIFICATIONS:

Code	Model	Box	Carton	Cat.
05770002*	Without Microprocessor	1	1	60.01
05770012**	With Microprocessor	1	1	60.01

* Suitable for polymer Econblock RF control units.
Suitable for RF copper control units and sub-control units.

Series 4021.B

Safety thermostat and connector for safety thermostat connection.

Well insertion.
Bimetallic type.

- Tripping temperature 55 °C

Code	Model	Box	Carton	Cat.
04021015*	Thermostat	1	1	60.01
04800002**	Thermostat	1	1	60.01
02659005	Connector	1	1	60.01

* Suitable for polymer Econblock RF control units.
** Suitable for RM / RF copper control units and sub-control units.

Series 3404.B

1/2" probe holder well with copper conduit.

For Kilma-Evo-RM control unit.

Code	Box	Carton	Cat.
03404005	1	1	60.01

Series 2448

1/2" probe holder well with copper conduit for TL50 thermostatic head.

For Kilma-Evo/Econblock RF control unit.

Code	Box	Carton	Cat.
02448023	1	1	60.01

Series 303

Two dial thermometers complete with thermowell.

- Thermometer scale 0 ÷ 80°C
- G1/2" connection (UNI-EN-ISO 228)

Code	Size	Box	Carton	Cat.
03030400	Ø 40	1	1	60.01

Series 875.C

Complete cap unit for valves with thermostatic option and Kilma Zone manifolds.

Complete cap assembly for thermostatically controlled valves (fig.1)

Code	Figure	Box	Carton	Cat.
00875023*	2	1	1	60.01

Can be used for a 1-way manifold

Cap assembly (fig.2)

Code	Figure	Box	Carton	Cat.
00875073	2	1	1	60.01

Can be used for 2,3,4 and 5-way manifolds.

Rod/ring nut group

Code	Figure	Box	Carton	Cat.
09119003	3	1	1	60.01

Can be used for 2,3,4 and 5-way manifolds.

Series 2250

Flow meter with lockshield valve function and flow rate indicator.

- Temperature range 0 ÷ 80 °C
- Max operating pressure 10 Bar

Code	Adjustment (l/min)	Box	Carton	Cat.
22500002	1 ÷ 2	10	10	60.01
22500012*	1 ÷ 4	10	10	60.01
22500022	0 ÷ 2,5	10	10	60.01

* Flow meter provided with pre-assembled kits

Series 1528

Pair of polymer brackets for offset fixing of polymer manifolds, complete with collar series 1410.

- Centre distance 220 mm

Code	Box	Carton	Cat.
15280600	1	1	60.01

For pipes to be assembled with no overlaps.
Suitable with housing boxes series 2606.
Standard in polymer compact manifolds 1410 series.

Series 1000

Pair of polymer brackets for aligned fixing of polymer anti-condensation 1002 series manifolds, complete with collar.

- Centre distance 220 mm

Code	Box	Carton	Cat.
10000600	1	1	60.01

Suitable with housing boxes series 2606.
Standard in polymer compact manifolds 1002 series.

Series 792

Pair of polymer brackets for offset fixing of polymer manifolds, complete with compact brass collar series 2028.

- Centre distance 220 mm

Code	Box	Carton	Cat.
07920600	1	1	60.01

For pipes to be assembled with no overlaps.
Suitable with housing boxes series 2606.
Standard in brass compact polymer manifolds 2028 series.

Series 810

Pair of polymer brackets for aligned fixing of polymer manifolds, complete with collar series.

- Centre distance 220 mm

Code	Box	Carton	Cat.
08100600	1	1	60.01

Brackets used to assemble Kilma control units.
Brass manifolds aligned fixing.

Series 8629

Thermometer with collar for brackets for 1410 - 2028 and 608 series manifold kits.

- Thermometer scale 0 ÷ 80°C

Code	Box	Carton	Cat.
08629005	1	1	60.01

Series 829.A

Multi-way compact manifold complete with valves with thermostatic option and hand wheel.

- Temperature range 0 ÷ 100 °C
- Max operating pressure 10 Bar

Code	Size	Ways	Box	Carton	Cat.
08292630	1"	2	1	1	60.01
08290630	1"	3	1	1	60.01
08300630	1"	4	1	1	60.01
08310630	1"	5	1	1	60.01
08320630	1"	6	1	1	60.01
08340630	1"	8	1	1	60.01
08350630	1"	9	1	1	60.01
08360630	1"	10	1	1	60.01
08370630	1"	11	1	1	60.01
08371230	1"	12	1	1	60.01
08371330	1"	13	1	1	60.01

Centre distance connections through 50mm distribution -EUROCONUS G3/4" UNI-EN-ISO 228 threading

Series 829.B

Multi-way compact manifold, complete with micrometric lockshield regulating valves with graduated hand wheel.

- Temperature range 0 ÷ 100 °C
- Max operating pressure 10 Bar

Code	Size	Ways	Box	Carton	Cat.
08292610	1"	2	1	1	60.01
08290610	1"	3	1	1	60.01
08300610	1"	4	1	1	60.01
08310610	1"	5	1	1	60.01
08320610	1"	6	1	1	60.01
08330610	1"	7	1	1	60.01
08340610	1"	8	1	1	60.01
08350610	1"	9	1	1	60.01
08360610	1"	10	1	1	60.01
08370610	1"	11	1	1	60.01
08371210	1"	12	1	1	60.01
08371310	1"	13	1	1	60.01

Centre distance connections through 50mm distribution -EUROCONUS G3/4" UNI-EN-ISO 228 threading

Series 829.C

Compact manifold, multi-way, complete with flow meters, with lockshield valve and flow indicator function.

- Temperature range 0 ÷ 80 °C
- Max operating pressure 10 Bar

Code	Size	Ways	Box	Carton	Cat.
08292600	1"	2	1	1	60.01
08290600	1"	3	1	1	60.01
08300600	1"	4	1	1	60.01
08310600	1"	5	1	1	60.01
08320600	1"	6	1	1	60.01
08330600	1"	7	1	1	60.01
08340600	1"	8	1	1	60.01
08350600	1"	9	1	1	60.01
08360600	1"	10	1	1	60.01
08370600	1"	11	1	1	60.01
08371200	1"	12	1	1	60.01
08371300	1"	13	1	1	60.01

Centre distance connections through 50mm distribution -EUROCONUS G3/4" UNI-EN-ISO 228 threading

Series 67.E

Full bore ball valve kit for manifolds.

Knob operated complete with immersion thermometer with removable rear bulb, MF connections, with OR seal fitting.
Suitable for water, water+glycol.

- Operating temperature with water -20 ÷ +120 °C
- Thermometer scale 0 ÷ +80 °C

CERTIFICATIONS:

Code	Size	Box	Carton	Cat.
00670630	1"	1	1	60.01

Fitting with OR seal connection.

Series 450.B

Air and water manual discharge terminal unit.

Brass and polymer manifolds kits standard installation.

- Pressure gauge holder connection G 1/8" (for RBM Ø 40 radial pressure gauge - scale 0 ÷ 16 bar - Code 7469.005)

Code	Size	Box	Carton	Cat.
04500650	1"	1	1	60.01

Series 449

Air and water manual discharge terminal.

Standard installation on delivery line of brass and polymer manifold kits.

- Pressure gauge holder connection G 1/8" (for RBM Ø 40 radial pressure gauge - scale 0 ÷ 16 bar - Code 7469.005)

Code	Size	Box	Carton	Cat.
04490650	1"	1	1	60.01

Series 221

Ball discharge cock, with hose connection and rotating cap.

- Threaded connection M UNI-EN-ISO 228

Code	Size	Box	Carton	Cat.
02210400	1/2"	10	10	60.01

Series 913

Electric board for MZ6 modules.

Electric board for the electric connection of the room thermostat and power supply of the pump.

Code	Box	Carton	Cat.
09130012	1	1	60.01

1016 series

New hand wheel for thermostatically controlled valve.

Code	Size	Box	Carton	Cat.
10166003	U	1	1	60.01

U = Universal

Series 7504

On-Off electro-mechanical actuator for zone valve on the Modular hydraulic group.

- Auxiliary micro switch with potential-free contacts
- Power supply cable 6 X 0,50 mm² L=100 mm
- Power supply voltage 230V 50/60Hz - 24V 50/60 Hz
- 4VA absorption
- Operating temperature 0 ÷ 50 °C
- IP44 protection rating

CERTIFICATIONS:

Code	Power supply	Box	Carton	Cat.
07504005	230V AC	1	1	60.01
07504015	24V AC	1	1	60.01

Series 2414

Modular hydraulic unit filter (300 µm)

Code	Box	Carton	Cat.
24140000	1	1	60.01

Series 2683

Modular hydraulic unit template on fixing plate.

Code	Size	Box	Carton	Cat.
26830500	3/4"	1	1	60.01
26830600	1"	1	1	60.01

Series 939

Probe holder fitting FF.

Double female connection (1"1/4), conical seat.
"O-Ring" seal with rotating nuts.

Code	Size	L (mm)	Box	Carton	Cat.
09390510	1" F	73	2	2	60.01
09390610	1" 1/4 F	80	2	2	60.01

Zone modules Mz spare parts old version.
Probe holder fittings to be used with PT500 probes wet assembly code 1567.00.02 (3m) and 1567.00.22 (10m).

Series 4666

Reduction for probe holder connection.

Code	Box	Carton	Cat.
04666003	1	1	60.01

Zone modules Mz spare parts old version.
To be coupled to probe holder fittings series 939 for the probe assembly.

Series 3218

Thermostatic control for Micromega MIX zone modules.

- Temperature adjustment range: 40÷70 °C (Model TL70M)

Code	Model	Box	Carton	Cat.
32180012*	TL70 M	1	1	60.01

Specific accessory for Micromega MIX series 3240.

Series 1092

Turbine volumetric meter, domestic water, without impulse-sender.

The turbine volumetric meter is single-jet, dry quadrant type; it is supplied to meter the volume of the cold domestic water used. This version comes without impulse-sender device.

Printed brass case, protected with nickel galvanic treatment
Clock device inserted in a hermetically sealed vacuum case
Double mounting by means of anti-magnetic stainless steel pins; it allows the turbine to rotate in all flow rate and installation conditions

- Protection against the action of external magnets
- Adequate surface inlet filter
- Installation on HORIZONTAL and VERTICAL pipes
- Operating temperature max 50 °C (DCW) - 90 °C (DHW)
- Nominal pressure (PN) 16 Bar

CERTIFICATIONS:

Certified for use with drinking water, in accordance with It. Ministerial Decree 174/2004

FEATURES:

DCW domestic cold water turbine volumetric meter (cannot be remotely controlled)

Code	Model	Size	L (mm)	Q3 (m³/h)	Box	Carton	Cat.
10920500*	VC15	3/4"	80	2,5	1	1	60.01
10920532**	VC15	3/4"	110	2,5	1	1	60.01
10920602	VC25	1"	-	4	1	1	60.01

* L = 80 mm
** L = 110 mm

DCW domestic hot water turbine volumetric meter (cannot be remotely controlled)

Code	Model	Size	L (mm)	Q3 (m³/h)	Box	Carton	Cat.
10920510	VH15	3/4"	80	2,5	1	1	60.01
10920522	VH15	3/4"	110	2,5	1	1	60.01
10920612	VH25	1"	-	4	1	1	60.01

* L = 80 mm
** L = 110 mm

Ready for installing an impulse-sender device code 2258.00.02

Series 2258

Impulse-sender device for domestic water meter.

Reed cable length 1m

Code	Box	Carton	Cat.
22580002	1	1	60.01

Series 2554

Impulse-sender device for Woltmann meter.

Reed cable length 1m

Code	Box	Carton	Cat.
25540002	1	1	60.01

Series 2551.A

Compact radio module with built-in inductive sensor, 868 MHz Wireless M-Bus.

- IP68 protection rating
- Optical interface radio 868 MHz Wireless M-Bus
- Battery life up to 12 + 1 years

CERTIFICATIONS:

Wireless M-Bus radio module compliant with the EN 13757-4 standard

Code	Box	Carton	Cat.
25510002	1	1	60.01

It can be installed on the meter at any time and sealed for protection.

Series 2551.B

Arrow radio module.

- IP68 protection rating
- Optical interface radio 868 MHz Wireless M-Bus
- Battery life up to 12 years

Code	Box	Carton	Cat.
25510012	1	1	60.01

Combined to the impulse-sender, it makes it possible to remotely read the meter it is coupled with.

Series 3584

Battery for Single Block and Split meter HC-S electronic module.

Code	Box	Carton	Cat.
35840000	1	1	60.01

Battery for Single Block meter, series 2561 - 2950 - 2571 - 2953 - 3577 - 3578 - 3579
Battery for Split meter series 2562 - 2573 - 2952 - 2956 (new HC-S electronic module model available in the 2019 catalogue)

Series 3585

External feeder for Single Block meter and Split HC-S electronic module meter.

- Input power supply: 230V - 50Hz / 24V (two different versions)
- Output power supply: 3.0V – 40mA

Code	Power supply	Box	Carton	Cat.
35850000	230V	1	1	60.01
35850010	24V	1	1	60.01

External feeder for Single Block meter, series 2561 - 2950 - 2571 - 2953 - 3577 - 3578 - 3579
External feeder for Split meter series 2562 - 2573 - 2952 - 2956 (new HC-S electronic module model available in the catalogue from 2019)

Series 8853

Capillary pipe for differential pressure control and balancing valve.

Code	Box	Carton	Cat.
08853005	1	1	60.01

Series 2968

External feeder for Split meter HC-S electronic module.

- Input power supply: 230V - 50Hz (two different versions)
- Output power supply: 3.0V – 60mA

Code	Power supply	Box	Carton	Cat.
29680002	230V	1	1	60.01

External feeder for Ultrasound Split HC-S electronic module series 1568 - 2568 - 2954
External feeder for Split meter series 2562 - 2573 - 2952 - 2956 (obsolete HC-S electronic module model available in the catalogue until 2018)

Series 3581

Various accessories for Single Block heat meter.

Module with 2 pulse outputs

Code	Figure	Box	Carton	Cat.
35810000	1	1	1	60.01

M-Bus module

Code	Figure	Box	Carton	Cat.
35820000	2	1	1	60.01

Cable with 3 impulsive inputs

Code	Figure	Box	Carton	Cat.
35820010	3	1	1	60.01

868 W-mbus radio module

Code	Figure	Box	Carton	Cat.
35830000	4	1	1	60.01

For Single block meter series 2561 - 2950 - 2571 - 2953 - 3577 - 3578 - 3579 - and for Split meter series 2562 - 2573 - 2952 - 2956 (new HC-S electronic module model available in the catalogue from 2019).

Series 2717

Transparent plastic ring nut for press fitting.

Ring nut for RBM Tita-fix water distribution fitting

Code	Size	Box	Carton	Cat.
02722015	16x2	1	1	60.01
02725015	18x2	1	1	60.01
02729015	20x2	1	1	60.01
02909015	26x3	1	1	60.01
02912015	32x3	1	1	60.01
04162005	40x3,5	1	1	60.01
04164005	50x4	1	1	60.01
04166005	63x4,5	1	1	60.01

Ring nut for RBM Tita-gas gas distribution fitting

Code	Size	Box	Carton	Cat.
02722055	16x2	1	1	60.01
02729055	20x2	1	1	60.01
02909055	26x3	1	1	60.01
02912055	32x3	1	1	60.01

Series 2718

Stainless steel pipe clamping bush for press fitting.

Code	Size	Box	Carton	Cat.
02723004	16x2	1	1	60.01
02726004	18x2	1	1	60.01
02730004	20x2	1	1	60.01
02910004	26x3	1	1	60.01
02913004	32x3	1	1	60.01
04161005	40x3,5	1	1	60.01
04163005	50x4	1	1	60.01
04165005	63x4,5	1	1	60.01

Series 7362

Swivel joint and hose connection for curved cock code 3255 - 3256.

Code	Size	Box	Carton	Cat.
73621200	1/2"	10	10	60.01
73623400	3/4"	5	5	60.01
73621000	1"	5	5	60.01

Series 7366

Lever and lock nut for ball valve code 3371 - 3373

Code	Size	Box	Carton	Cat.
736614N0	1/4"	10	10	60.01
736622N0	2"1/2	1	1	60.01
736630N0	3"	1	1	60.01
736640N0	4"	1	1	60.01

Series 7370

Butterfly and lock nut for ball valve code 3372 - 3374.

Code	Size	Box	Carton	Cat.
737014N0	1/4"	10	10	60.01
737038N0	3/8"	10	10	60.01
737012N0	1/2"	10	10	60.01
737034N0	3/4"	5	5	60.01
737002N0	1"1/2	5	5	60.01
737020N0	2"	5	5	60.01

Series 7419

Butterfly and lock nut for code 3386.

Code	Size	Box	Carton	Cat.
741912N0	1/2"	10	10	60.01
741934N0	3/4"	10	10	60.01
741910N0	1"	5	5	60.01

Series 2729

Aluminium lever and lock nut for ball valves series RBM NILO and RBM IRO.

Black aluminium lever

Code	Size A	Size B	Box	Carton	Cat.
27291120	3/4" - 1" - 1"1/4	1" - 1"1/4	10	10	60.01
27291620	1"1/2 - 2"	1"1/2 - 2"	5	5	60.01

Red aluminium lever

Code	Size A	Size B	Box	Carton	Cat.
27299510	3/8"	3/8"	10	10	60.01
27299511	1/2"	1/2" - 3/4"	10	10	60.01
27291110	3/4"-1"-1"1/4	1"-1"1/4	10	10	60.01
27291610	1"1/2 - 2"	1"1/2 - 2"	5	5	60.01

Size A: suitable for RBM NILO series ball valves
Size B: suitable for RBM IRO series ball valves

Series 2048

Rubber coated steel lever and lock nut for RBM NILO and RBM IRO series ball valves.

Black rubber coated steel lever

Code	Size A	Size B	Box	Carton	Cat.
20488521	1/2"	1/2" - 3/4"	10	10	60.01
20481020	3/4" - 1" - 1"1/4	1" - 1"1/4	10	10	60.01

Size A: suitable for RBM NILO series ball valves
Size B: suitable for RBM IRO series ball valves

Red rubber coated steel lever

Code	Size A	Size B	Box	Carton	Cat.
20488510	3/8"	3/8"	10	10	60.01
20488511	1/2"	1/2" - 3/4"	10	10	60.01
20481010	3/4" - 1" - 1"1/4	1" - 1"1/4	10	10	60.01
20481510	1"1/2 - 2"	1"1/2 - 2"	5	5	60.01

Size A: suitable for RBM NILO series ball valves
Size B: suitable for RBM IRO series ball valves

Series 2049

Aluminium butterfly and lock nut for RBM NILO and RBM IRO series ball valves.

Black aluminium butterfly

Code	Size A	Size B	Box	Carton	Cat.
20494820	3/8"	3/8"	10	10	60.01
20494821	1/2"	1/2" - 3/4"	10	10	60.01
20497020	1" - 1"1/4	1" - 1"1/4	5	5	60.01

Size A: suitable for RBM NILO series ball valves
Size B: suitable for RBM IRO series ball valves

Red aluminium butterfly

Code	Size A	Size B	Box	Carton	Cat.
20494810	3/8"	3/8"	10	10	60.01
20494811	1/2"	1/2" - 3/4"	10	10	60.01
20496010	3/4"	-	5	5	60.01
20497010	1" - 1"1/4	1" - 1"1/4	5	5	60.01

Size A: suitable for RBM NILO series ball valves
Size B: suitable for RBM IRO series ball valves

Series 8783

Spacer fitting with chrome-plated plug for recessed shut-off cock.

Code	Figure	Box	Carton	Cat.
08783003*	1	1	1	60.01

Spare part for series 20.A and 20.B recessed shut-off cock.

Series 3516

Extension lead kit for recessed shut-off cock.

Code	Size	Figure	Box	Carton	Cat.
35160002	30	1	1	1	60.01
00556004*	25	2	1	1	60.01
01063004*	35	2	1	1	60.01

*only extending the chrome-plated cap

Accessory for series 20.A and 20.B recessed shut-off cock.

Series 8780.C

Screw unit for recessed shut-off cock.

Code	Size	Figure	Box	Carton	Cat.
08780005	1/2"	1	1	1	60.01
08782005	3/4"	1	1	1	60.01

Spare part for series 20.A and 20.B recessed shut-off cock.

General Terms of sale

Scope

These sales terms apply to all the products shown in the price list sold by R.B.M. spa or by other companies of the R.B.M. Group (hereafter "R.B.M."). Should these terms and conditions not be consistent with the terms and conditions agreed in individual sales contracts concluded between R.B.M. and its customers, the latter will prevail. R.B.M. will not be bound by the customer's general purchase terms (hereafter "CGA") regardless of them being mentioned or included in the orders or in any other documentation coming from the customer, unless expressly accepted in writing by R.B.M. R.B.M. reserves the right to add, change or eliminate any of the provisions included in these sales terms and these additions, changes or cancellations will apply to all orders made by the customer, starting from the day following the date when the relevant notification concerning the new sales terms was made to him.

Orders

All orders are considered as bookings and do not result in a commitment for R.B.M. to deliver the goods ordered either partially or totally. The goods referring this order confirmation may possibly be sold, as well as for supplying related technical assistance, to third parties exclusively in strict compliance with all national and international legislation and, in particular, in strict compliance with, by way of example and not exhaustive, Regulation (EU) 833/2014, as amended, and to any and other sanctions and embargoes in force from time to time.

Prices

Unless agreed otherwise, the prices valid on the date of the order will apply. The prices refer to goods supplied ex works in Nave Incoterms 2020. Packaging costs are at the purchaser's expense.

Deliveries

Usual conditions: prompt delivery, if in stock.

Special terms: to be defined from time to time. The seller is not liable to pay compensation for direct damage resulting from delayed deliveries.

Transport

Goods, even if they are sold postage paid by special agreement, are transported with delivery obligations and risks governed by Art. 1510, 2nd para., It. Civil Code

Payments

Unless agreed otherwise, payments are considered as settled on the date of receipt of the invoice. Payments are due within the deadlines agreed, even when the goods arrive late and in the case of malfunctioning, partial and total loss during transport and when the purchaser does not collect the goods for which collection on his side has been agreed. In the case of non-payment, 10 days after the submittal of the invoice or after the deadline established, the seller will be entitled to issue a sight draft and to debit the relevant costs. Furthermore, after the deadline established has been exceeded, interest will be calculated at the rate established in Decree Law 231/2002.

Tolerances

Wear tolerances both on finished products and on their individual elements they consist of, are admitted.

Suspension of orders

45 days after the delivery date established has been exceeded the purchaser will be entitled to request the cancellation of the order. The relevant notification must be made by registered letter and no rights will arise from the cancellation. If the seller establishes that the purchaser has difficulties settling payments, he/she will be entitled to suspend or delay further deliveries after the agreed payment deadlines.

Returns

Returns will be accepted only with our prior authorization and must be only DAP (Nave) Incoterms 2020.

Complaints and Claims

Complaints concerning the quantity or quality of the goods supplied must be notified by the purchaser to the seller within 8 days after receiving the goods.

Modifications

R.B.M. reserves the right to make all the changes it may deem necessary to the Products without prior notice.

Applicable law and Jurisdiction

The sales terms and each individual sales contract will be regulated and interpreted according to Italian Law, unless otherwise agreed in writing between R.B.M. and the Customer.
All disputes resulting from or connected with, these sale terms and/or individual sales contracts are subject to the exclusive jurisdiction of the Court of Brescia.
However, R.B.M. reserves the right to start legal action also as plaintiff in the customer's country, either in Italy or abroad.

R.B.M. spa

Quality certificate

At R.B.M. raw materials undergo rigorous checks. We guarantee a careful product selection and use cutting-edge manufacturing techniques.

Manufacturer's liability for damage from defective products.

DURATION

R.B.M. is liable for the system for 10 years from its sale within the limits and conditions as per art. 114 and ss. Legislative Decree 06.09.2005 n. 206 . The replacement or repair of the Product or of one of its components does not extend the duration, which remains unchanged.

THE SERVICE PROVIDED BY R.B.M.

The service covers the damages that R.B.M. is required to pay for compensation as civilly liable by law for material damage and/or bodily harm accidentally caused to third parties due to a defect of the products, after their delivery to third parties and thereby benefiting from third-party liability insurance on products with a limit of €10m for each damage and per year. Expenses for product replacements and repairs, costs for inquiries by anyone not authorised beforehand by RBM, property damage deriving from non-compliance of the product with its intended use, damage caused by the infringement of patents and/or trademarks, and penalties are excluded.

LIABILITY OPERABILITY AND EFFECT

An essential condition is to ensure that the installation of the product has been carried out according to the provisions for the design, installation and operation of the system, which must be installed by a specialised heating and plumbing installer. Furthermore, the product must be installed in accordance with applicable laws and the highest professional standards and the installer must provide a system certification. Finally, the instructions and warnings for the use and maintenance of the system must be complied with.

EXCLUSIONS

R.B.M. shall not be liable in case of damage or malfunctions that are due, among other reasons, to facts and faults not attributable to the manufacturer and in any case to the following causes:

- use of non-original parts and/or products and/or components and accessories or not recommended by R.B.M.;
- failure to comply with rules, regulations, use;
- installation defects or failure to take the necessary precautions to ensure execution to a professional standard;
- maintenance defects, negligence and careless use;
- failure to comply with the instructions and warnings provided by R.B.M. and/or by the installer;
- tampering, maintenance in general, work by unauthorised personnel;
- anomalous use, use of aggressive liquids or otherwise unsuitable for correct storage and use;
- damage caused by incorrect or avoidable work in the attempt to remedy the defect;
- anomalies or malfunction of non-R.B.M components;
- corrosion, encrustations or failures caused by stray currents, condensation, aggressive or acid water, descaling treatments carried out incorrectly, lack of water, sludge deposits or limescale;
- accidents, force majeure such as frost, overheating, fires, natural events (hail, tornadoes, lightning, floods, earthquakes), etc.;
- hydraulic and/or electrical systems that do not comply with current standards.

Technical work to eliminate the above defects and resulting damage must be agreed with R.B.M., which reserves the right to accept or refuse the assignment. In any case, it must be specifically agreed upon and according to the workers or best rates or quotes for the work to be carried out.

RBM

RBM SpA
Via S. Giuseppe, 1
25075 Nave (Brescia)
Italy
Tel. +39 030 2537211 ric. aut.
Fax +39 030 2531799
info@rbm.eu
www.rbm.eu

RBM France
1200 Avenue Olivier Perroy
Les Portes de Rousset Bat B
13790 Rousset
France
Tél. +33 (0)4 42298120
Fax +33 (0)4 42533867
info@rbmfrance.fr

RBM Benelux
Slingerweg, 13
B-3600 Genk
Belgium
Tel. +32 (0)89 303565
info@rbm.be
www.rbm.eu

RBM SpA
Reprezentanta Romania
+40 (0)729019733
info.romania@rbm.eu

RBM РФ & СНГ
Info & contacts:
info@rbm.com.ru

RBM Cooling and Heating Equipment Ltd. Co
Block 1041, Thames Town,
No.900 North Sanxin Road,
Songjiang District, Shanghai
kobe.wang@rbm.eu

RBM SYSTEM PTY LTD.
Unit 22,25 Ingleston Road
QLD 4173 Tingalpa
Australia
Tel. 0061 7 30732428
hello@rbmsystems.com.au

RBM

rbm.eu