MAXA HEATING & COOLING

# General Price List 2026

Residential, Commercial, Industrial

Ver 26.04

| DEP00000100000 | | General Price List Residential, Commercial, Industrial |
|---|---|---|
| Rev. | Date | Modifications |
| 1 | 07/01/2026 | **First issue** |
| 2 | 27/04/2026 | **Phase out of the Calido 110, 200 and 300 ranges**<br>**Airmust 3V A1 Compatibility Update**<br>**Phase out the OTA range with AC motors**<br>**Phase out the PCUS and PCUSM OTA range; phase in the NECS OTA range**<br>**Phase-out of the CVB machine-mounted control unit**<br>**Phase out WGC8**<br>**Update for the Double, Triple and Quadruple versions (residential)**<br>**Update to the Total-One range** |
| 3 | 19/05/2026 | **Phase Out Ceiling-Floor Multi-split (SPV53R-SPV71R)** |
| 4 | 8/06/2026 | **Update on dimensions and mountings for the Calido 190/250**<br>**Phase out of the 3V2 accessory and phase in of the 3V2-25-1NO for the VE range** |

# Index


## Inverter Heat Pumps & Chillers

### R290 10

i-290 0106÷0118 ..... 10
i-290 0121÷0127 ..... 17
i-290 0240÷0250 ..... 23

### R32 30

i-32V5 ..... 30
i-32V5C Midi ..... 38
i-32V5H Midi ..... 43
ACT ..... 49
ACT 120/220 ..... 51
i-HPV5H ..... 53

## Hybrid Systems

Atria ..... 60

## Heat pump water heater

Calido 105 NEW ..... 64
Calido 190/250 NEW ..... 68

## Storage Tanks, DHW Cylinders & Instantaneous DHW Heaters

Puffroller & PuffrollerOut ..... 72
B-Puffroller ..... 74
Caddy ..... 76
Barrel ..... 78
Hybridroller ..... 80
Hydrofull ..... 82
Aqua Speedy ..... 87

## On/Off Heat Pumps & Chillers

### R290 NEW 88

HWA2-A 0270÷04170 ..... 90
HWA2-AH 0270÷04170 ..... 97

### R410A 104

HWA1-A 0140÷0285 ..... 104
HWA1-A/H 0140÷0285 * ..... 104
HWA1-A 02106÷04349 ..... 110
HWA1-A/H 02109÷04345 ..... 118

## Heat Pump & Chiller Controls/Supervisors

e-Pro ..... 130
e-Lite ..... 131
Hi-TV415 ..... 132
i-CR2 ..... 133
Connect Box ..... 134
Maxa Das ..... 135

## Hydronic Terminals

Controls for hydronic terminals ..... 136
Grimper Fan ..... 141
VE: VMI, VMF, OMP, OMI ..... 145
VE: VII, VIF, OIP, OII ..... 149
MI A3 ..... 162
HCA1 - HCA1/4 ..... 164
HCN ..... 167
HCNP ..... 170
HCNA ..... 175

## Heat Recovery Units

OTAE-1 40÷500 ..... 180
OTAE-1 V 40÷500 ..... 182
OTAE-1 P 40÷320 ..... 184
OTAE1-RHP 35÷450 ..... 188
OTA1 micro E 25÷130 ..... 191

## Air-to-Air Heat Pumps

Nevalis Monosplit NEW ..... 194
Lys R3 Monosplit ..... 196
Total-One ..... 198
Total-One Outdoor Units ..... 200
DHW Tanks Total-One ..... 201
Outdoor Multisplit Units ..... 205
Nevalis Multisplit NEW ..... 207
Lys R3 Multisplit ..... 208
Multisplit Cassette ..... 209
Ducted multisplit ..... 210
Multisplit Console ..... 211
Commercial Monosplit Outdoor Units ..... 217
Commercial Monosplit Cassette ..... 219
Ducted Commercial Monosplit ..... 221
Commercial Monosplit Console NEW ..... 223
Ceiling Floor Commercial Monosplit ..... 224
Commercial Monosplit Column ..... 225
Dimensional Drawings ..... 226

# A clear vision, a solid path
# Technology and innovation for over 30 years

At Maxa, we design, build, and distribute heating and air conditioning systems with a clear goal in mind: to offer solutions that improve people's comfort and contribute to a more sustainable future.
This is not just a statement of intent, but the mission that has guided every decision we have made since the company was founded.

Founded in 1992 thanks to the entrepreneurial intuition of Luciano Tredicesimo Ferroli, Maxa has grown to become one of the top five Italian companies in the production of heat pumps. A journey built on innovation, quality, and strategic vision.
Today, under the leadership of his sons Paolo, David, and Simone, Maxa continues to evolve, maintaining its original values and focusing on cutting-edge technologies, Made in Italy production, and attention to the environment.

Every day, our team works passionately to develop solutions that combine energy efficiency, comfort, and sustainability, responding to the needs of a constantly changing market.

**1992**

### The Beginnings

In 1992, the MAXA project began, entering the residential air conditioning sector, which was in its infancy at the time.
The first warehouse and workshop is inaugurated in Villanova di San Bonifacio.
Growth continues thanks to the economic development of the air conditioning market, and in 2004 we become a joint-stock company.

**2005**

### The Expansion

Since 2005, the decision has been made to expand sales activities abroad, thus beginning a process of growth that has led Maxa to become a well-known brand on international markets.

**2010**

### Our production

In 2010, the first production line for 5 to 15 kW inverter heat pumps was opened, riding the first signs of renewal in the heating market with alternative products to boilers, and supported by the possibility of exploiting new environmentally friendly technologies.
Since 2011, Maxa has been equipped with an M1 climate chamber for testing units with up to 100 kW of cooling capacity on chillers and heat pumps.

**2016**

### The expansion

A process of growth and expansion began in Maxa's production department, leading us in 2016, following the construction of the fifth line, to develop the production of heat pumps up to 115 kW.
All this makes it necessary to expand the company and build a new 7,100 m² factory, in addition to the existing 7,800 m².

**2024**

### Innovation

In 2019, we inaugurated eight production lines.
In 2023, three new lines of heat pumps using R290 gas were introduced and the new M2 climate chamber was inaugurated for in-depth performance testing.
In 2024, the historic payoff line "Air Conditioning" is replaced with the more appropriate and modern "Heating and Cooling."
The reason for the change lies in the need to further strengthen our identity as a Made in Italy manufacturer in the heating and cooling sector.

**2025**

### The New Plant

At the beginning of 2025, work began on the construction of a new 7,100 m² facility, which will house the new logistics center and electronics production laboratories. The expansion of the facility represents a concrete step toward the future.

# Innovation, Performance, Reliability
# Our commitment to the future of air conditioning

With a vision focused on excellence and sustainability, we design and manufacture solutions for residential, commercial, industrial, and tertiary air conditioning.

Thanks to a department **Research & Development** At the cutting edge, our product range is among the most comprehensive and competitive in Europe, offering increasingly efficient and sustainable technologies.

What truly sets us apart is our production capacity. We have:

- **8 production lines** dedicated to the production of inverter heat pumps, designed to respond flexibly and quickly to market demands;
- **2 climate-controlled rooms** (M1 and M2) capable of testing units up to 800 kW, ensuring maximum precision in performance verification. A strategic asset that allows us to confidently declare what our products are capable of doing.

## A strategic investment in the future

Our headquarters in Arcole covers a total area of 42,000 square meters, housing offices, a 7,000-square-meter warehouse for storing finished products and spare parts, and a 7,800-square-meter production area that houses our eight production lines.

Between 2025 and 2026, this industrial hub will undergo a major expansion: an additional 6,600 square meters will be added to further enhance production and logistics capacity.
A strategic investment that not only strengthens our operational efficiency, but also allows us to respond more quickly and flexibly to market needs, integrate new technologies, and consolidate our role as a leader in the HVAC sector.

The expansion of the plant represents a concrete step towards the future, with the aim of guaranteeing quality, innovation, and constant availability of our products.

Maxa constantly invests in quality control through modern testing procedures and advanced monitoring systems to ensure maximum performance, efficiency and reliability of all HVAC units.
Among the main Eurovent *(Verification of certificate validity: www.eurovent-certification.com)*, EHPA, HP Keymark, ISO 9001:2015, Heat Pump Austria.

# Professional Service
## Expertise at your side, in every phase of the project

With Maxa, you're not just buying a product: you're choosing a partner who will accompany you through every stage of your project.
Our Pre-Sales and After-Sales teams are at your side from the initial consultation to the commissioning of the system, right through to technical support and ongoing training.

## Pre-sale

### Preliminary study and technical consultancy
We carefully analyse the project, assess system requirements and propose the most suitable HVAC solution to ensure maximum compatibility between system and product.

### Support in system design
We work closely with HVAC engineers during the design phase, supporting the sizing of the units, hydraulic and refrigerant layouts and control logics, to simplify every stage of the job.

### On-site inspections
For new buildings or renovation projects, our engineers carry out on-site inspections to verify installation conditions, technical feasibility and the correct integration of our solutions.

### Regulatory consultancy
We provide the documentation required to meet design and installation requirements, facilitating access to incentive schemes and ensuring project compliance.

### Technical documentation
Manuals, technical data sheets, certifications, and much more are just a click away in our reserved area, providing everything you need to design and install safely and in compliance with regulations.

**Reserved area dedicated to professionals:**
**docs.maxa.it**

## After-Sales S

### Continuous training
Our **Maxa Service** network is constantly updated through technical courses and product training, ensuring a high level of technical expertise and knowledge of the latest product developments.

### Warranty extension
We offer the possibility to extend the warranty on spare parts and labour, an option that provides additional security and added value to your investment.

### Dedicated customer support
A team that is always available to respond to all requests, providing assistance, documentation and information quickly and directly.

Service MAXA

## Warranty extensions

In addition to the 2-year warranty required by current regulations (DIR 99/44/EC, Legislative Decree 24/2002 and Legislative Decree 206/2005), Maxa offers various services:

### +3 3-Year Warranty Extension

Warranty extension up to 3 years on spare parts in addition to the 2 years provided for under current regulations. Valid for the residential, commercial and Calido ranges, to be requested before the expiry of the product's standard warranty. Conditions, details and exclusions relating to the general product warranty conditions are available in the warranty brochure, which can be downloaded from the page www.maxa.it/en/assistance.

### King Warranty Extension

Total extension of the warranty by an additional 12, 24, 36, 48 months (labor plus spare parts) for products marked with the icon.
Conditions, details and exclusions relating to the general product warranty conditions are available in the warranty brochure, which can be downloaded from the page www.maxa.it/en/assistance.

| | |
|---|---|
| + 12 months | 2.5% on the list price |
| + 24 months | 3.5% on the list price |
| + 36 months | 5% on the list price |
| + 48 months | 6.5% on the list price |

## Initial start-ups, pre-inspection visit and first commissioning

### Initial start-up operations

Operations performed by Maxa technical service:

- Verification of correct product operation
- Setting operating parameters according to requirements
- Our technical service will provide the information necessary for the proper operation of the product.

### Pre-inspection visit

The pre-inspection visit, when requested in the order, includes the initial start-up service. It comprises:

- Consulting on electrical and hydraulic connections regarding the product
- Verification of compliance with Maxa specifications.

### How to request the first start-up commissioning

Mandatory initial start-up service. The initial start-up entitles you to a full warranty extension of an additional 12 months beyond the general warranty conditions. To request the heat pump start-up, you can:

- connect to the support page of our website, fill in the commissioning form and send it
- fill in the form supplied with the product and send it to the nearest service center.

# i-290 Inverter Heat Pumps
## Efficiency, Comfort and Environmental Sustainability

Solutions that maximize energy efficiency for heating, cooling, and domestic hot water production, ensuring a high level of environmental sustainability.
The use of **natural refrigerant R290** enables high performance with full respect for the environment, ensuring comfort and energy savings in residential, commercial and industrial applications.
The range is designed to adapt to diverse application contexts: **14 models** are available, with capacities from **6 to 50 kW**, offering versatility, reliability, and tailored performance.

### 78°C
Maximum water supply temperature up to 78°C, guaranteed on a continuous basis.

### -20/+46°C
Perfect for any climate thanks to the wide operating range from -20°C to +46°C.

### 350 kW
Single units from 6 to 50 kW, which, when configured in **cascade**, can reach a maximum of 350 kW.

### A+++
Energy efficiency class up to A+++.

### GWP = 0,02
Environmentally friendly R290 refrigerant with a very low climate impact, for sustainable applications.

### Design
The unique **design** and modern aesthetics facilitate architectural integration in any context.

### Made In Italy
Range conceived, designed and manufactured by Maxa at the Arcole (Italy) plant.

### Easy Plug
All components have been arranged to maximize ease of installation.

## Maximum respect for the environment

**The eco-friendly gas R290,** with an extremely low GWP of just 0.02 (Global Warming Potential), drastically reduces environmental impact compared to traditional gases, delivering a concrete improvement in environmental sustainability. This means that the environmental impact of R290 gas on global warming is very low.

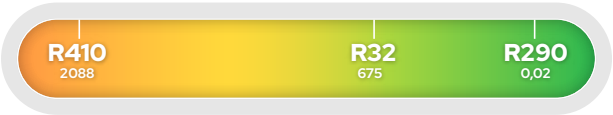

## Ease of Installation

The heat pumps in the i-290 range are designed for quick and straightforward commissioning. Thanks to the hydraulic connections located at the rear of the heat pump, where the electrical service terminal blocks are also positioned, installation and commissioning are significantly simplified.

## Solution suitable for every system

The i-290 range can be perfectly and rapidly integrated both into new buildings and in combination with existing systems, allowing highly efficient operation with both radiant underfloor systems and traditional systems with high-temperature water. Numerous accessories and configurations make it possible to customize the equipment of each heat pump.

## Reduced refrigerant charge

The i-290 heat pumps ensure a significantly reduced refrigerant charge compared to traditional R32 solutions. For the same heating capacity, the amount of R290 required is considerably lower, with values that remain limited even in the higher-capacity models.

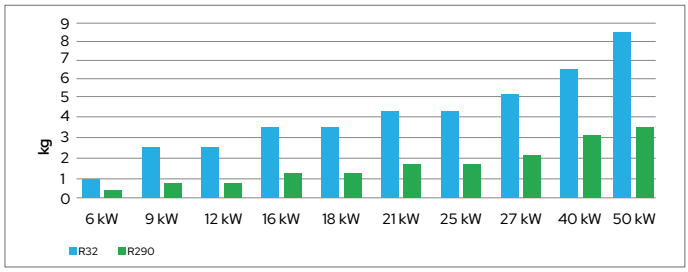


## High level of safety

The i-290 heat pumps guarantee high safety standards. In sizes from 0106 to 0127, the use of **antispark components** always ensures safe operation of the heat pump. In the larger sizes, 0240 and 0250, the use of **leak detection sensors**, installed directly inside the heat pumps, determines their overall safety.

The i-290 heat pumps up to size 0127 are also equipped as standard with a **air separator** that continuously removes any air and gas present in the hydraulic circuit.
The internal filter creates turbulence, promoting the separation of micro-bubbles, which are then automatically expelled by a float valve. This component improves efficiency, reduces noise and extends the service life of the system.

## Assured performance all year round

The indispensable comfort ensured by domestic water systems, and the resulting increase in demand for domestic hot water, are perfectly met by i-290 technology, which confirms and extends the application range of heat pumps designed for this purpose. The i-290 range makes it possible to produce technical hot water under any outdoor temperature condition, from +46°C down to -20°C.

# i-290 0106÷0118

## Monobloc inverter air-to-water reversible heat pump with R290

6 kW÷18 kW

The latest evolution of MAXA's full inverter heat pump technology uses the eco-friendly refrigerant gas R290. This new evolutionary step further simplifies the design of systems fully managed by the heat pump alone. In fact, thanks to the 75°C maximum water temperature achievable with the i-290 range, application on systems requiring high supply temperatures is also very straightforward. Finally, the direct replacement of existing systems that previously operated with combustion appliances is very manageable.

MADE IN ITALY

REFRIGERANT 0.02 GWP

75°C OUTLET WATER Supply Temperature

A+++ ENERGY EFFICIENCY CLASS

WI-FI AS STANDARD WITH E-PRO CONTROL

CASCADE MANAGEMENT FOR UP TO 7 UNITS

MODBUS AVAILABLE AS STANDARD

FULL INVERTER SYSTEM

SILENCED VERSION

COIL ANTICORROSION TREATMENT

### Construction Features

- Proprietary control system with microcontroller-based regulation, superheat control logic via electronic expansion valve.
- Compressor: Twin Rotary DC inverter.
- Fans: axial type with brushless DC motor.
- Source heat exchanger: finned coil with copper tubes and aluminum fins with hydrophilic coating.
- User plate heat exchanger with AISI 304 stainless steel brazed plates, featuring low pressure drop on the water side.
- Refrigerant circuit made of copper tubing, including: condensing pressure control, electronic thermostatic valve, reversing valve, high-pressure switch, liquid separator, pressure tapping point, bidirectional metal mesh filters, high- and low-pressure transducers.
- Integrated hydraulic circuit with high-efficiency variable-speed brushless circulator, flow meter, deaerator with air vent valve, 3-bar overpressure valve, and system filling and drain cock.
- The SL version ensures reduced sound emissions, particularly with regard to standard EN12102-1:2022. The reduction of the sound power level under A7/W55 conditions is between 2 and 4 dB(A).

### Logics and Controls:

- All units can operate in three different modes: heating, cooling, and domestic hot water, with specific programs that maximize performance in all conditions, including optional control via climatic compensation curve.
- The i-290 series units are capable of managing mixing valves, diverting valves and secondary-side circulation pumps; they are also able to control the solar thermal system, any integration with external heat sources, and integration with external Home/Building Automation or Home Automation systems.
- ModBus RTU available as standard.
- All units in the i-290 series (0106/0118) are supplied as standard with the e-Pro wired controller, providing complete control of the heat pump both locally and remotely via connectivity, once connected to the Wi-Fi network.
- Thanks to the MyMaxa app, you can associate one or more MAXA heat pump installations with your user profile and thus obtain full remote control of them.

## Operating Areas

**Hot**

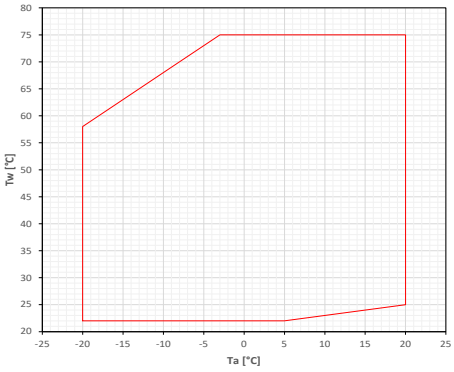


**Cold**

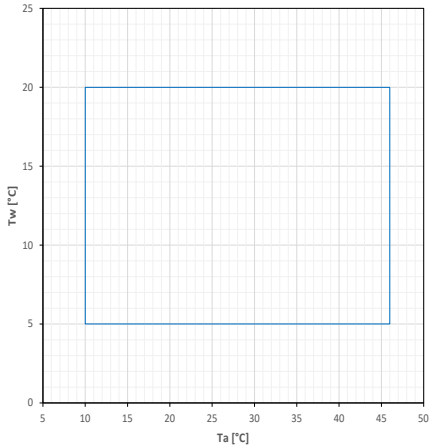


**DHW**

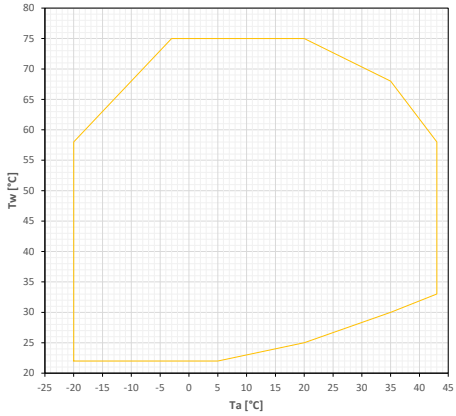


Tw: water temperature - Ta: outdoor air temperature

# Accessories

## Factory-installed

- **KA** - Antifreeze kit (heat exchanger + base) – includes the use of a self-heating cable that is glued to the base of the unit near the condenser coil, and a PET heater positioned on the plate heat exchanger face.
- **KA3** - Antifreeze kit (base only) - provides exclusively for the use of a self-heating cable that is applied to the base of the unit near the condensing coil.
- **TR2** - Anti-corrosion treatment for coils – thanks to the treatment, the coil becomes flexible to withstand thermal expansion and contraction, mechanically resistant, protected against UV rays and dirt-repellent. Heat transfer losses are very limited. The treatment ensures coil protection in virtually all environmental conditions: from coastal to rural areas, from industrial to urban zones. The treatment withstands 6000 h according to ASTM B117.
- **TR2C4** - Anti-corrosion treatment on coil and sheet metal – includes a TR2-type treatment on the coil and, in addition, the hot-dip galvanized steel panels are painted so as to make them suitable for unit installation in C4H environments, in accordance with UNI EN 12944. The external fastening hardware is made of AISI 304 material, class A2. The treatment also includes the fan protection grille, while the galvanized sheets inside the unit (electrical panel casing and inductances) are excluded.
- **RP** - Coil protective grilles – wire mesh to prevent foreign objects from entering the coil and to protect the coil from accidental contact with objects or people.

## Provided separately

- **SAS** - Domestic hot water probe / Remote system probe – in some system configurations (e.g. heat pump in parallel with the boiler on the same hydronic circuit and diverter valve for boiler exclusion), it may be necessary to enable a system temperature probe so that the unit controller can correctly manage the operation. The remote system probe controls the heat pump temperature only during the compressor start-up phase; shutdown is managed by the probe located on the heat pump flow line.
- **SPS** - Solar panel probe for GI3 – probe required to measure the temperature of the solar panels when the unit is integrated with a solar thermal system.
- **AG** - Anti-vibration kit – designed to prevent transmission of vibrations to the structure; must be installed under the unit, in the dedicated mounting holes.
- **VRC** - Condensate drip tray – galvanized sheet metal container to be installed at the base of the unit for collecting condensate water.
- **FY** - Y-strainer – contains a stainless steel mesh screen (500 µm filtration) that collects solid materials present in the water. Filtration prevents blockage and/or damage to the devices installed downstream of the strainer. Alternatively, it is possible to install a dirt separator that ensures a filtration level not greater than 1 mm (in this case, it is no longer necessary to install the Y-strainer).
- **FD** - Dirt separator – allows the heavier impurities present in the hydraulic circuit to be stopped and retained, as they are captured by a synthetic filter mesh and collected in a settling chamber. A magnetic device located inside the body of the dirt separator also makes it possible to trap ferromagnetic particles.
- **VDIS2** - Diverting valve – 3-way motorized ball valve DN (1"1/4) Kvs 19.2, 1" ½ MMM connections, complete with actuator.
- **ACT** - Technical storage tank (see dedicated section).
- **VSA** - Anti-freeze thermal discharge valve – a valve capable of opening at 0°C to prevent ice formation inside the pipes.
- **RP** - Coil protection grilles – wire mesh to prevent foreign objects from entering the coil and to protect the coil from accidental contact with objects or people (supplied as a separate accessory and to be installed by the installer).
- **e-LITE**** - Color touch-screen wired controller, which can be used as a remote keypad for the heat pump, as it replicates the functions of the on-board unit display. It is equipped with local temperature sensing and time scheduling.
- **Hi-TV415**** - Color touchscreen wired remote controller for centralized management of a chiller/heat pump cascade, for up to 7 units.
- **Connect Box**** - Wi-Fi communication gateway for the Maxa Connect App.
- **GI3**** - External system management module - enables management of the following functions: recirculation pump control, plant-side mixing valve control, solar thermal integration control.
- **ISK**** - USB/RS485 serial converter – interface device capable of reading and writing control registers via the RS485 standard and converting them to a USB port that can be connected to any supervision system.
- **LNC**** - LAN-Wi-Fi router – device that allows the unit to be connected to a local network via Ethernet cable or Wi-Fi coverage for remote monitoring.
- **OVPN**** - 4G LAN-Wi-Fi router with VPN tunnelling – a device that allows you to connect the unit remotely to an industrial router using the secure OPENVPN service.

** Accessories not usable simultaneously

**e-PRO**
Wi-Fi multifunction remote controller
**STANDARD**

**e-LITE**
Multifunction remote controller
**ACCESSORY**

**Hi-TV415**
Touch screen remote controller for cascade management (max 7 units)
**ACCESSORY**

| | | | 0106 | 0109 | 0109 T ** | 0112 |
|---|---|---|---|---|---|---|
| **Cooling** | Cooling capacity (1) | kW | 5,43 | 8,57 | 8,57 | 10,7 |
| | Power input (1) | kW | 1,95 | 2,77 | 2,77 | 3,75 |
| | EER (1) | W/W | 2,79 | 3,09 | 3,09 | 2,85 |
| | Cooling capacity (2) | kW | 5,62 | 9,15 | 9,15 | 12,6 |
| | Power input (2) | kW | 1,25 | 1,93 | 1,93 | 2,83 |
| | EER (2) | W/W | 4,48 | 4,75 | 4,75 | 4,44 |
| | SEER (5) | W/W | 4,77 | 5,41 | 5,41 | 4,72 |
| | Water flow rate (1) | L/s | 0,26 | 0,40 | 0,40 | 0,49 |
| | Pressure drops in the heat exchanger on the user side (1) | kPa | 7,8 | 5,1 | 5,1 | 7,5 |
| | Nominal available head (1) | kPa | 65,7 | 57,3 | 57,3 | 81,2 |
| **Heating** | Heating capacity (3) | kW | 6,24 | 9,07 | 9,07 | 12,6 |
| | Input power (3) | kW | 1,31 | 1,99 | 1,99 | 2,61 |
| | COP (3) | W/W | 4,76 | 4,56 | 4,56 | 4,83 |
| | Heating capacity (4) | kW | 5,97 | 8,74 | 8,74 | 11,6 |
| | Power input (4) | kW | 1,91 | 2,85 | 2,85 | 3,60 |
| | COP (4) | W/W | 3,12 | 3,07 | 3,07 | 3,22 |
| | Heating capacity (12) | kW | 4,50 | 7,93 | 7,93 | 8,52 |
| | Power input (12) | kW | 1,61 | 2,66 | 2,66 | 3,01 |
| | COP (12) | W/W | 2,81 | 2,98 | 2,98 | 2,84 |
| | Heating capacity (11) | kW | 5,87 | 9,05 | 9,05 | 12,0 |
| | Power input (11) | kW | 2,29 | 3,40 | 3,40 | 4,60 |
| | COP (11) | W/W | 2,57 | 2,66 | 2,66 | 2,62 |
| | SCOP (6) | W/W | 4,74 | 5,07 | 5,07 | 4,71 |
| | Water flow rate (3) | L/s | 0,29 | 0,44 | 0,44 | 0,58 |
| | Pressure drops in the user-side heat exchanger (3) | kPa | 9,6 | 6,2 | 6,2 | 10,5 |
| | Nominal useful head (3) | kPa | 63,6 | 53,0 | 53,0 | 79,5 |
| | Energy efficiency water 35°C / 55°C | Class | A+++/A++ | A+++/A+++ | A+++/A+++ | A+++/A++ |
| **Compressor** | Type | | Twin Rotary DC Inverter | | | |
| | Refrigerant oil (type) | A | PZ46M | PZ46M | PZ46M | PZ46M |
| | Number of compressors | no. | 1 | 1 | 1 | 1 |
| | Oil charge (quantity) | L | 0,45 | 0,52 | 0,52 | 0,90 |
| **Refrigerant** | Type | | R290 | | | |
| | Refrigerant charge (7) | kg | 0,43 | 0,75 | 0,75 | 1,00 |
| | Refrigerant quantity in tonnes of $CO_2$ equivalent (7) | Ton | 0,000009 | 0,000015 | 0,000015 | 0,000020 |
| | Design pressure (high/low) heat pump mode | bar | 30,3/0,3 | 30,3/0,3 | 30,3/0,3 | 30,3/0,3 |
| | Design pressure (high/low) chiller mode | bar | 30,3/2 | 30,3/2 | 30,3/2 | 30,3/2 |
| **Outdoor zone fans** | Type | | Brushless DC Motor | | | |
| | Number | no. | 1 | 1 | 1 | 2 |
| **Internal heat exchanger** | Internal heat exchanger type | | Plate type | | | |
| | No. of indoor heat exchangers | no. | 1 | 1 | 1 | 1 |
| | Water content | L | 0,94 | 1,69 | 1,69 | 1,69 |
| **Hydraulic circuit** | Water content of the hydronic circuit | L | 2,2 | 2,2 | 2,2 | 3,7 |
| | Maximum water-side pressure | bar | 3 | 3 | 3 | 3 |
| | Hydraulic connections | inch | G1" | G1" | G1" | G1" |
| | Minimum water volume (8) | L | 65 | 95 | 95 | 125 |
| | Maximum circulator power | kW | 0,095 | 0,095 | 0,095 | 0,14 |
| | Maximum absorbed current of circulator | A | 0,7 | 0,7 | 0,7 | 1,2 |
| **Sound data** | Sound power level Lw (9) | dB(A) | 57 | 57 | 57 | 59 |
| | Sound pressure at 1 m distance Lp1 (10) | dB(A) | 42 | 43 | 43 | 44 |
| | Sound pressure at 10 m distance Lp10 (10) | dB(A) | 26 | 27 | 27 | 28 |
| **Sound data SL version** | Sound power level Lw (9) | dB(A) | 55 | 55 | 55 | 57 |
| | Sound pressure at 1 m distance Lp1 (10) | dB(A) | 40 | 40 | 40 | 42 |
| | Sound pressure at 10 m distance Lp10 (10) | dB(A) | 24 | 26 | 26 | 26 |
| **Electrical data** | Power supply | | 230V/1/50Hz | | 400V/3/50Hz | 230V/1/50Hz |
| | Maximum absorbed power | kW | 2,9 | 4,4 | 4,4 | 5,1 |
| | Maximum absorbed current | A | 14,4 | 21,4 | 6,7 | 25,8 |
| | Maximum power input with antifreeze kit | kW | 3,0 | 4,6 | 4,6 | 5,3 |
| | Maximum current draw with antifreeze kit | A | 15,0 | 22,0 | 7,3 | 26,4 |

(1) Cooling: outdoor air temperature 35 °C; inlet/outlet water temperature 12/7 °C.
(2) Cooling: outdoor air temperature 35 °C; inlet/outlet water temperature 23/18 °C.
(3) Heating: outdoor air temperature 7 °C d.b. 6 °C w.b.; inlet/outlet water temperature 30/35 °C.
(4) Heating: outdoor air temperature 7 °C d.b. 6 °C w.b.; water inlet/outlet temp. 47/55 °C.
(5) Cooling: low temperature, variable output, constant flow rate.
(6) Heating: average climate conditions; Tbiv = -7 °C; low temperature, variable output, constant flow rate.
(7) Indicative data, subject to change. For the correct data, always refer to the technical nameplate on the unit.
(8) Calculated for a 10 °C decrease in system water temperature with a defrost cycle lasting 6 minutes.
(9) Sound power: heating mode according to EN 12102:2022 Annex A; value determined on the basis of measurements carried out in accordance with UNI EN ISO 9614-1, in compliance with Eurovent certification requirements.
(10) Sound pressure: value calculated from the sound power level in condition (9) using standard UNI EN ISO 3744:2010.
(11) Heating: outdoor air temperature 7 °C d.b. 6 °C w.b.; inlet/outlet water temperature 55/65 °C.
(12) Heating: outdoor air temperature -7 °C d.b. -8 °C w.b.; water inlet/outlet temp. 30/35 °C.
** Preliminary data. Available from: summer 2026

| | | | 0112 T ** | 0114 ** | 0115 | 0118 |
|---|---|---|---|---|---|---|
| **Cooling** | Cooling capacity (1) | kW | 10,6 | 11,7 | 12,4 | 13,8 |
| | Power input (1) | kW | 4,01 | 3,63 | 3,71 | 4,34 |
| | EER (1) | W/W | 2,65 | 3,24 | 3,35 | 3,16 |
| | Cooling capacity (2) | kW | 12,4 | 12,2 | 12,9 | 13,9 |
| | Power input (2) | kW | 3,08 | 2,41 | 2,40 | 2,69 |
| | EER (2) | W/W | 4,02 | 5,07 | 5,37 | 5,18 |
| | SEER (5) | W/W | 4,49 | 5,01 | 5,02 | 5,04 |
| | Water flow rate (1) | L/s | 0,49 | 0,57 | 0,57 | 0,66 |
| | Pressure drops in the heat exchanger on the user side (1) | kPa | 7,5 | 10,6 | 11,7 | 16,0 |
| | Nominal available head (1) | kPa | 81,2 | 85,0 | 79,7 | 73,5 |
| **Heating** | Heating capacity (3) | kW | 12,1 | 14,8 | 16,3 | 18,7 |
| | Input power (3) | kW | 2,67 | 3,19 | 3,30 | 4,05 |
| | COP (3) | W/W | 4,54 | 4,64 | 4,94 | 4,62 |
| | Heating capacity (4) | kW | 11,3 | 13,8 | 15,2 | 17,4 |
| | Power input (4) | kW | 3,66 | 4.34 | 4,52 | 5,32 |
| | COP (4) | W/W | 3,09 | 3,17 | 3,37 | 3,27 |
| | Heating capacity (12) | kW | 8,68 | 10,7 | 12,94 | 12,56 |
| | Power input (12) | kW | 3,02 | 3,49 | 4,44 | 4,38 |
| | COP (12) | W/W | 2,87 | 3,07 | 2,91 | 2,88 |
| | Heating capacity (11) | kW | 12,0 | 14,2 | 14,7 | 16,7 |
| | Power input (11) | kW | 4,83 | 5,34 | 5,17 | 6,04 |
| | COP (11) | W/W | 2,48 | 2,66 | 2,83 | 2,76 |
| | SCOP (6) | W/W | 4,47 | 4,70 | 4,85 | 4,76 |
| | Water flow rate (3) | L/s | 0,58 | 0,72 | 0,78 | 0,87 |
| | Pressure drops in the user-side heat exchanger (3) | kPa | 10,5 | 17,4 | 22,0 | 27,8 |
| | Nominal useful head (3) | kPa | 79,5 | 77,2 | 66,8 | 59,8 |
| | Energy efficiency water 35°C / 55°C | Class | A+++/A++ | A+++/A++ | A+++/A++ | A+++/A++ |
| **Compressor** | Type | | Twin Rotary DC Inverter | | | |
| | Refrigerant oil (type) | A | VG60 | VG60 | PZ46M | PZ46M |
| | Number of compressors | no. | 1 | 1 | 1 | 1 |
| | Oil charge (quantity) | L | 0,9 | 0,9 | 0,9 | 0,9 |
| **Refrigerant** | Type | | R290 | | | |
| | Refrigerant charge (7) | kg | 1,00 | 1,27 | 1,27 | 1,27 |
| | Refrigerant quantity in tonnes of $CO_2$ equivalent (7) | Ton | 0,000020 | 0,000025 | 0,000025 | 0,000025 |
| | Design pressure (high/low) heat pump mode | bar | 30,3/0,3 | 30,3/0,3 | 30,3/0,3 | 30,3/0,3 |
| | Design pressure (high/low) chiller mode | bar | 30,3/2 | 30,3/2 | 30,3/2 | 30,3/2 |
| **Outdoor zone fans** | Type | | Brushless DC Motor | | | |
| | Number | no. | 2 | 2 | 2 | 2 |
| **Internal heat exchanger** | Internal heat exchanger type | | Plate type | | | |
| | No. of indoor heat exchangers | no. | 1 | 1 | 1 | 1 |
| | Water content | L | 1,69 | 1,69 | 1,69 | 1,69 |
| **Hydraulic circuit** | Water content of the hydronic circuit | L | 3,7 | 3,7 | 3,7 | 3,7 |
| | Maximum water-side pressure | bar | 3 | 3 | 3 | 3 |
| | Hydraulic connections | inch | G1" | G1" | G1" | G1" |
| | Minimum water volume (8) | L | 125 | 155 | 155 | 155 |
| | Maximum circulator power | kW | 0,14 | 0,14 | 0,14 | 0,14 |
| | Maximum absorbed current of circulator | A | 1,2 | 1,2 | 1,2 | 1,2 |
| **Sound data** | Sound power level Lw (9) | dB(A) | 59 | 62 | 62 | 62 |
| | Sound pressure at 1 m distance Lp1 (10) | dB(A) | 44 | 47 | 47 | 47 |
| | Sound pressure at 10 m distance Lp10 (10) | dB(A) | 28 | 31 | 31 | 31 |
| **Sound data SL version** | Sound power level Lw (9) | dB(A) | 57 | 57 | 57 | 57 |
| | Sound pressure at 1 m distance Lp1 (10) | dB(A) | 42 | 42 | 42 | 42 |
| | Sound pressure at 10 m distance Lp10 (10) | dB(A) | 26 | 26 | 26 | 26 |
| **Electrical data** | Power supply | | 400V/3/50Hz | 230V/1/50Hz | 400V/3/50Hz | |
| | Maximum absorbed power | kW | 5,2 | 6,4 | 7,7 | 8,2 |
| | Maximum absorbed current | A | 9,5 | 28,5 | 15,8 | 16,5 |
| | Maximum power input with antifreeze kit | kW | 5,3 | 6,5 | 7,9 | 8,3 |
| | Maximum current draw with antifreeze kit | A | 10,1 | 29,1 | 16,4 | 17,1 |

(1) Cooling: outdoor air temperature 35 °C; inlet/outlet water temperature 12/7 °C.
(2) Cooling: outdoor air temperature 35 °C; inlet/outlet water temperature 23/18 °C.
(3) Heating: outdoor air temperature 7 °C d.b. 6 °C w.b.; inlet/outlet water temperature 30/35 °C.
(4) Heating: outdoor air temperature 7 °C d.b. 6 °C w.b.; water inlet/outlet temp. 47/55 °C.
(5) Cooling: low temperature, variable output, constant flow rate.
(6) Heating: average climate conditions; Tbiv = -7 °C; low temperature, variable output, constant flow rate.
(7) Indicative data, subject to change. For the correct data, always refer to the technical nameplate on the unit.
(8) Calculated for a 10 °C decrease in system water temperature with a defrost cycle lasting 6 minutes.
(9) Sound power: heating mode according to EN 12102:2022 Annex A; value determined on the basis of measurements carried out in accordance with UNI EN ISO 9614-1, in compliance with Eurovent certification requirements.
(10) Sound pressure: value calculated from the sound power level in condition (9) using standard UNI EN ISO 3744:2010.
(11) Heating: outdoor air temperature 7 °C d.b. 6 °C w.b.; inlet/outlet water temperature 55/65 °C.
(12) Heating: outdoor air temperature -7 °C d.b. -8 °C w.b.; water inlet/outlet temp. 30/35 °C.
** Preliminary data. Available from: summer 2026

# Dimensional Drawings

## i-290 0106 / 0109 / 0109 T

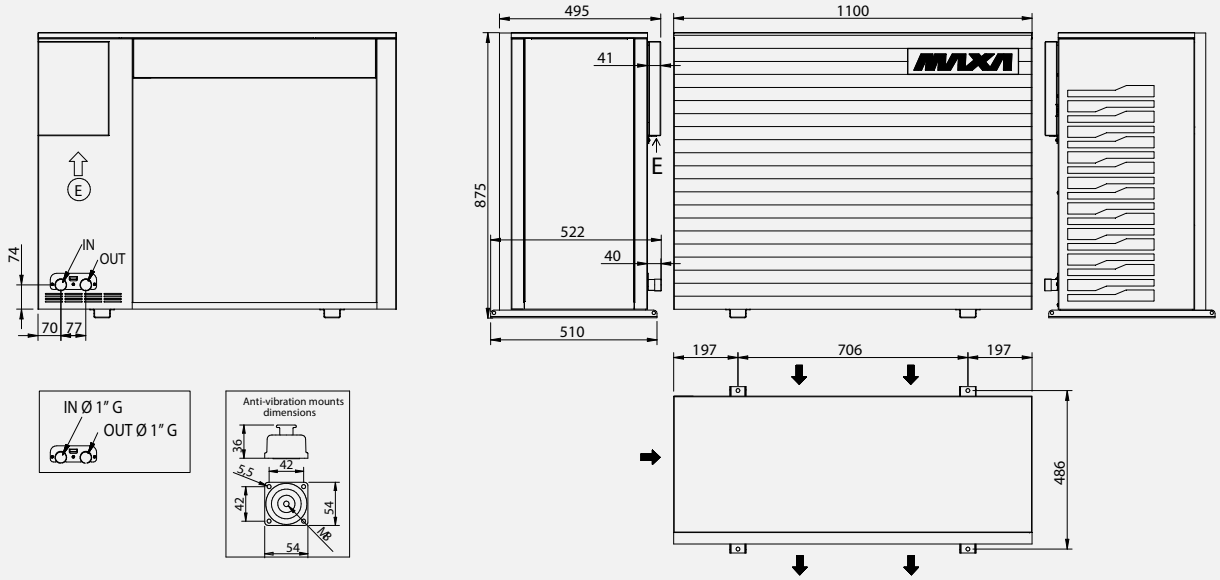


## i-290 0112 / 0112 T / 0114 / 0115 / 0118

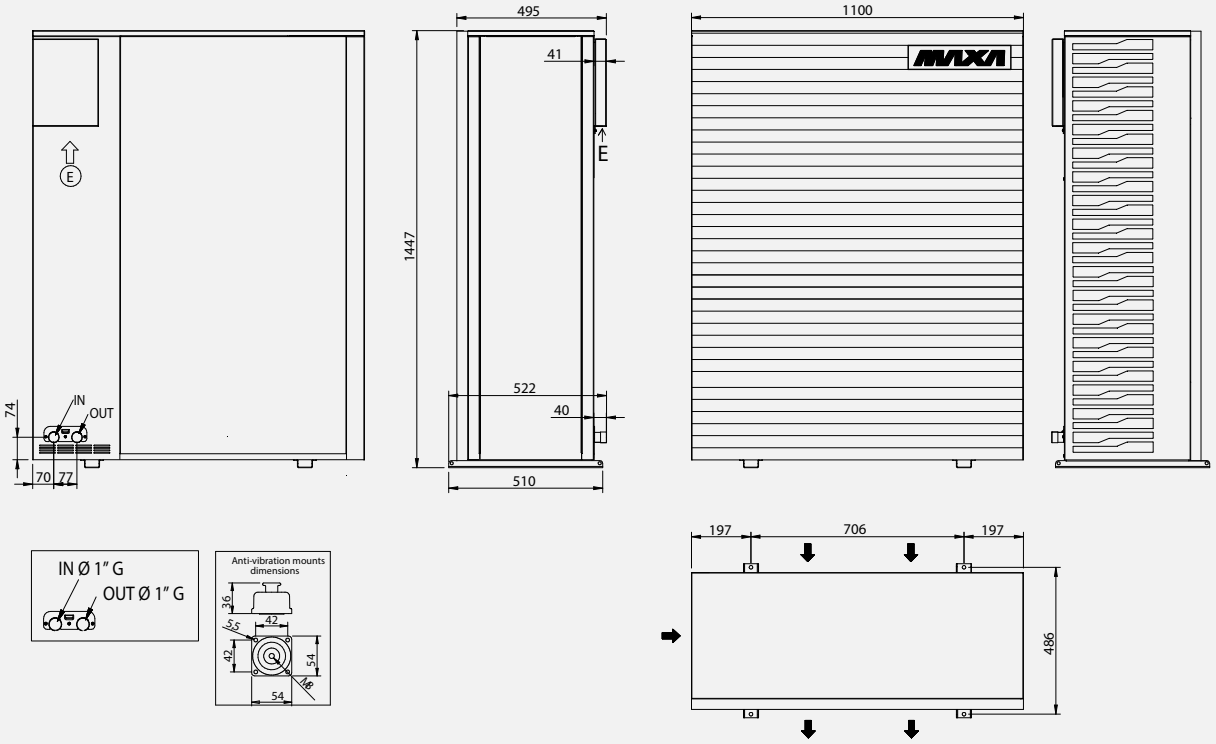


| | | 0106 | 0109 | 0109 T | 0112 | 0112 T | 0114 | 0115 | 0118 |
|---|---|---|---|---|---|---|---|---|---|
| L | mm | 1105 | 1105 | 1105 | 1105 | 1105 | 1105 | 1105 | 1105 |
| P | mm | 512 | 512 | 512 | 512 | 512 | 512 | 512 | 512 |
| H | mm | 870 | 870 | 870 | 1440 | 1440 | 1440 | 1440 | 1440 |
| Shipping weight | Kg | 117 | 119 | 129 | 170 | 179 | 184 | 188 | 188 |

E: Power supply input

Dimensions in mm

# System Diagram - Standard Application

| | | | | | | | |
|---|---|---|---|---|---|---|---|
| 1 | i-290 heat pump | 7 | Expansion vessel | 15 | Y-strainer / Dirt separator filter (FD) | 22 | Mixed circuit pump (zone 2) |
| 2 | 3-way DHW/system valve (VDIS) | 10 | Water connection | 19 | Degasser | 22bis | Direct circuit pump (zone 1) |
| 3 | DHW electric heater | 11 | Local thermostat (zone 1) | 20 | Mixing valve | 24 | Technical water tank (Puffroller) |
| 4 | DHW temperature sensor (SAS) | 11bis | Local thermostat (zone 2) | 21 | Mixed circuit water sensor | 30 | GI3 - External extension module |
| 5 | DHW Tank (Caddy) | 13 | e-PRO control | | | | |

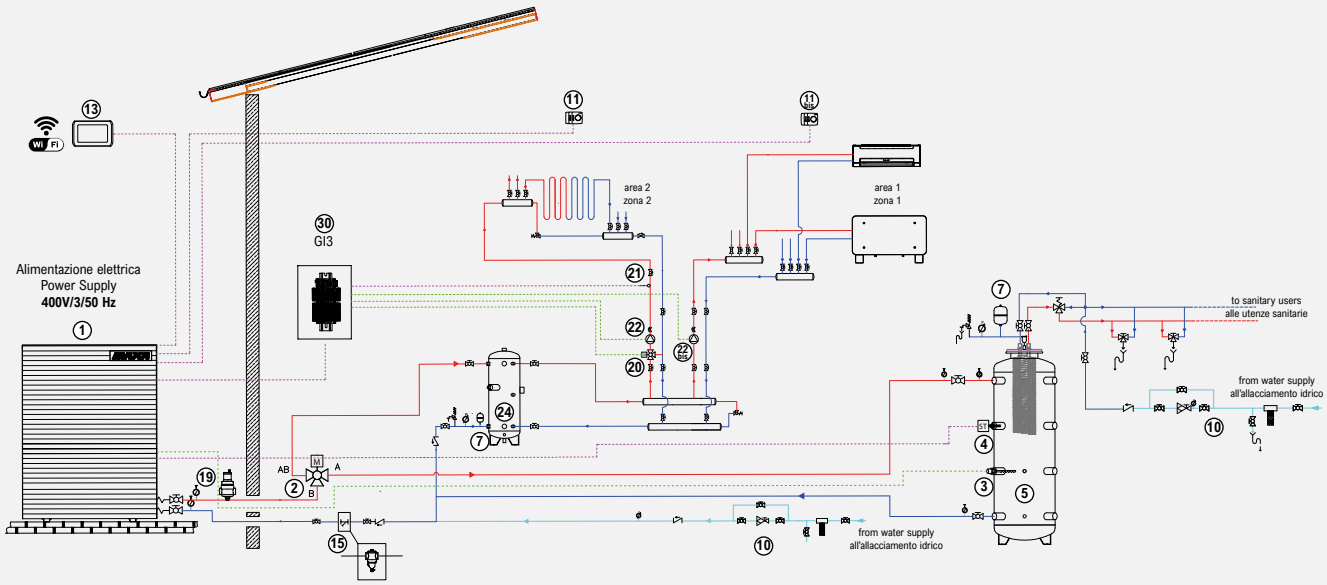


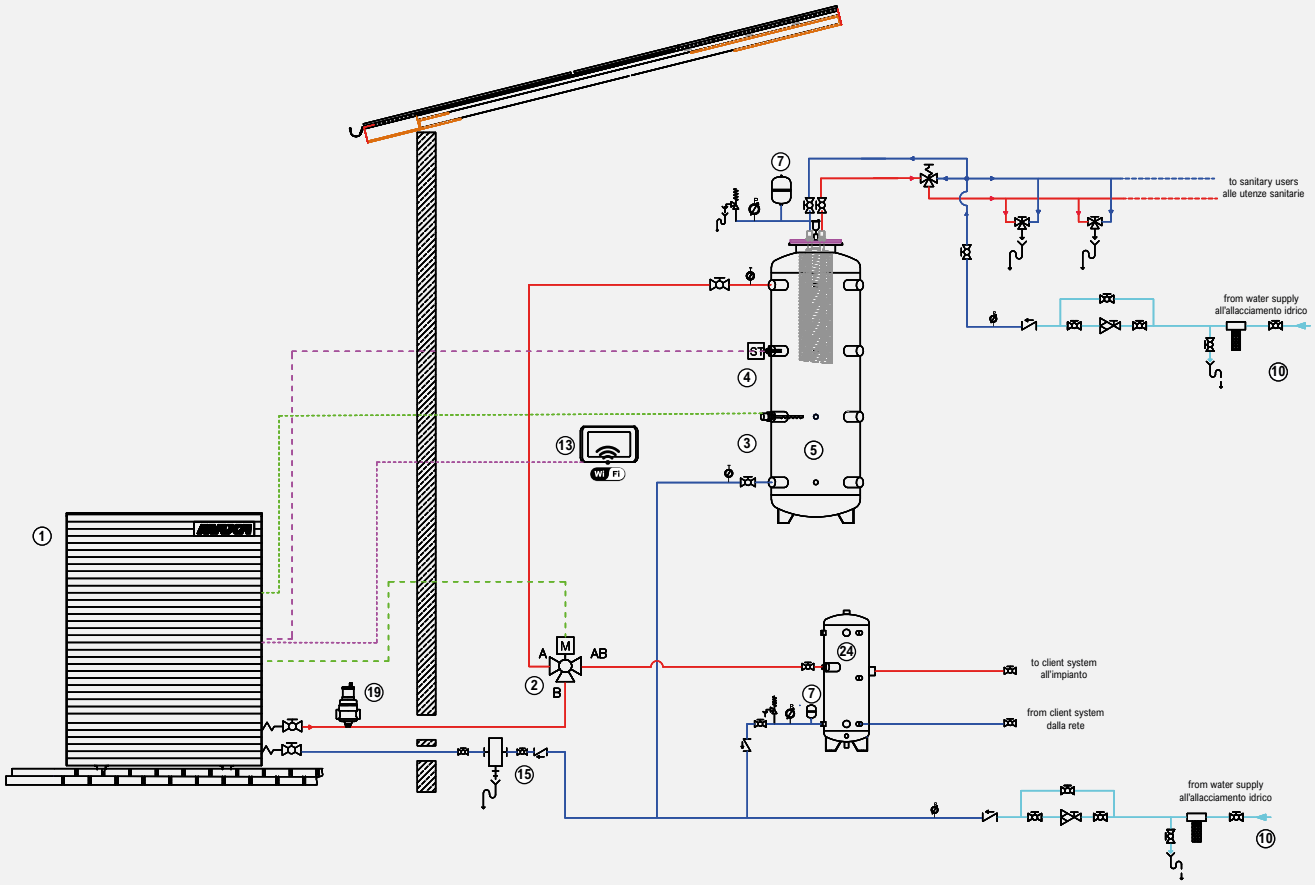


Purely indicative and non-binding diagram; for the construction of the system, it is necessary to refer to a design prepared by a qualified technician.

# Price list

| | | i-290 | i-290 SL |
|---|---|---|---|
| 0106 | code | 0112422#20350000D01 | 0112422#60350000D01 |
| | € | 6.892 * | 7.428 * |
| 0109 | code | 0112422#20360000D01 | 0112422#60360000D01 |
| | € | 7.459 * | 7.995 * |
| 0109 T | code | 0112422#21360000D01 | 0112422#61360000D01 |
| | € | 8.700 * | 9.236 * |
| 0112 | code | 0112422#20370000D01 | 0112422#60370000D01 |
| | € | 9.524 * | 10.060 * |
| 0112 T | code | 0112422#21370000D01 | 0112422#61370000D01 |
| | € | 10.000 * | 10.536 * |
| 0114 | code | 0112422#20540000D01 | 0112422#60540000D01 |
| | € | 10.400 * | 10.936 * |
| 0115 | code | 0112422#21380000D01 | 0112422#61380000D01 |
| | € | 10.605 * | 11.141 * |
| 0118 | code | 0112422#21390000D01 | 0112422#61390000D01 |
| | € | 11.204 * | 11.740 * |

| i-290 | | | 0106 | 0109 | 0109 T | 0112 | 0112 T | 0114 | 0115 | 0118 |
|---|---|---|---|---|---|---|---|---|---|---|
| **FACTORY-MOUNTED ACCESSORIES** | | | | | | | | | | |
| CM | Serial communication module for Modbus | € | Standard | | | | | | | |
| KA | Anti-freeze kit (heat exchanger + base) | € | 399 | 399 | 399 | 399 | 399 | 399 | 399 | 399 |
| KA3 | Adhesive base heater | € | 247 | 247 | 247 | 247 | 247 | 247 | 247 | 247 |
| RP | Battery protection nets | € | 227 | 227 | 227 | 278 | 278 | 278 | 278 | 278 |
| TR2 | Cu/Al coil with anti-corrosion treatment | € | 1.215 | 1.411 | 1.411 | 1.504 | 1.504 | 1.700 | 1.700 | 1.700 |
| TR2C4 | Cu/Al coil and sheet metal with anti-corrosion treatment | € | 1.813 | 2.009 | 2.009 | 2.101 | 2.101 | 2.297 | 2.297 | 2.297 |
| **ACCESSORIES SUPPLIED SEPARATELY** | | | | | | | | | | |
| e-PRO* | Wired Remote control, Wi-Fi connected | code | 0100225#20010 | | | | | | | |
| | | € | 463 | | | | | | | |
| e-LITE* | Multifunction touch screen wired control | code | 011049#0101 | | | | | | | |
| | | € | 463 | | | | | | | |
| Hi-TV415* | Centralised multifunction touchscreen remote control | code | 0103123#00001 | | | | | | | |
| | | € | 659 | | | | | | | |
| Connect Box ** | Heat pump communication gateway and MAXA CONNECT | code | 011049#0103 | | | | | | | |
| | | € | 318 | | | | | | | |
| VSA | Anti-freeze thermal discharge valve | code | 0101125#32500010 | | | | | | | |
| | | € | 402 | | | | | | | |
| GI3 ** | Hardware expansion module | code | 018210000#01 | | | | | | | |
| | | € | 886 | | | | | | | |
| AG | Anti-vibration support | code | 015908#010045 | | | | | | | |
| | | € | 175 | | | | | | | |
| RP | Battery protection nets | code | 0103023#2001 | | | 0103023#2101 | | | | |
| | | € | 227 | | | 278 | | | | |
| FD | Dirt separator filter | code | 0119100075 | | | 0119100076 | | | | |
| | | € | 118 | | | 280 | | | | |
| FY | Y-strainer | code | 017121#2401 | | | | | | | |
| | | € | 92 | | | | | | | |
| SAS | DHW storage sensor - Remote sensor | code | 0110321000001 | | | | | | | |
| | | € | 48 | | | | | | | |
| SPS | Solar panel sensor | code | CH-CC-EN-ST-0015 | | | | | | | |
| | | € | 104 | | | | | | | |
| VDIS2 | Three-way diverting valve for domestic hot water production in a thermal storage tank | code | 011049#0077 | | | | | | | |
| | | € | 411 | | | | | | | |

* Remote control connected and degasser included
* Accessories that cannot be used simultaneously
** Accessories not usable simultaneously

# i-290 0121÷0127

## Monobloc inverter air-to-water reversible heat pump with R290

21 kW÷27 kW

Range of heat pumps from 21 to 27 kW, equipped with eco-friendly R290 refrigerant gas, representing the most advanced evolution of full inverter technology.
The 21 to 27 kW range is able to reach a maximum water temperature of 78°C; this feature allows it to be combined with a wide variety of heating systems. Ideal for replacing combustion-based systems, it ensures simple installation and optimal energy efficiency, with a reduced environmental impact.

MADE IN ITALY | REFRIGERANT 0.02 GWP | 78°C OUTLET WATER Supply Temperature | A+++ ENERGY EFFICIENCY CLASS | WI-FI AS STANDARD WITH E-PRO CONTROL | CASCADE MANAGEMENT FOR UP TO 7 UNITS | FULL INVERTER SYSTEM | SUPER SILENCED VERSION | SCROLL INVERTER

### Construction Features

- Proprietary control system with microcontroller-based regulation, superheat control logic via electronic expansion valve.
- Compressors: DC inverter scroll.
- Fans: axial type with brushless DC motor.
- Source heat exchanger: optimized with a finned coil circuit, copper tubes and aluminum fins.
- User plate heat exchanger with AISI 304 stainless steel brazed plates, featuring low pressure drop on the water side.
- Refrigerant circuit made of copper tubing, including: condensation control, electronic thermostatic valve, reversing valve, high-pressure switch, liquid separator, liquid receiver, pressure tapping point, unidirectional filter-drier, high- and low-pressure transducers.
- Integrated hydraulic circuit with high-efficiency variable-speed brushless circulator, flow meter, deaerator with air vent valve, 6 bar overpressure valve, and system filling and drain cock.

### Logics and Controls:

- All units can operate in three different modes: heating, cooling, and domestic hot water, with specific programs that maximize performance in all conditions, including optional control via climatic compensation curve.
- The i-290 series units are capable of managing mixing valves, diverting valves and secondary-side circulation pumps; they are also able to control the solar thermal system, any integration with external heat sources, and integration with external Home/Building Automation or Home Automation systems.
- ModBus RTU available as "CM" accessory.
- All units in the i-290 (0121/0127) series are equipped as standard with the e-Pro wired controller, providing full control of the heat pump both locally and remotely via connectivity, once connected to the Wi-Fi network.
- Thanks to the MyMaxa app, you can associate one or more MAXA heat pump installations with your user profile and thus obtain full remote control of them.

## Operating Areas

**Hot**

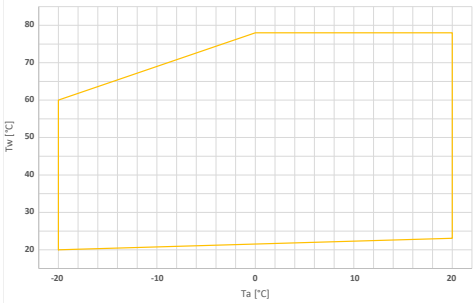


**Cold**

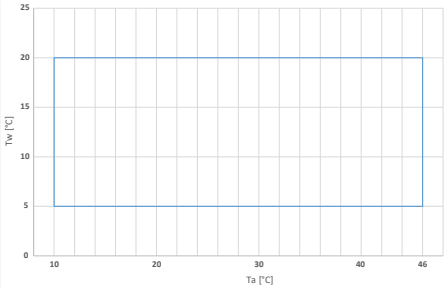


**DHW**

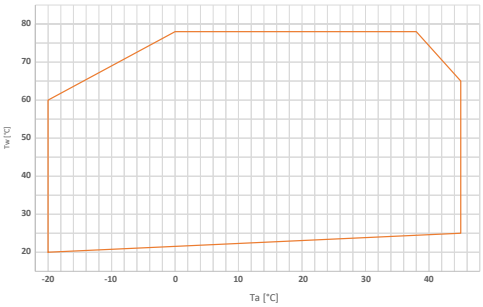


Tw: water temperature - Ta: outdoor air temperature

# Accessories

## Factory-installed

- **KA *** - Anti-freeze kit (heat exchanger + base) – uses a self-heating cable that is bonded to the base of the unit near the condensing coil, and a PET heater positioned on the plate heat exchanger face.
- **KA3 *** - Anti-freeze kit (base only) - provides exclusively for the use of a self-heating cable applied to the base of the unit near the condenser coil.
- **TR2** - Anti-corrosion treatment for coils – thanks to the treatment, the coil becomes flexible to withstand thermal contractions and expansions, mechanically resistant, protected against UV rays and repellent to dirt. Heat transfer losses are very limited. The treatment guarantees protection of the coils under virtually all environmental conditions: from coastal to rural areas, from industrial to urban zones. The treatment withstands 6000 h in accordance with ASTM B117.
- **TR2C4** - Anti-corrosion treatment on coil and sheet metal – includes a TR2-type treatment of the coil and, in addition, the hot-dip galvanized steel panels are painted to make them suitable for unit installation in C4H environments, in accordance with UNI EN 12944. The external fastening hardware is made of AISI 304, class A2. The treatment also includes the fan protection grille, while the galvanized sheet metal inside the unit (electrical panel casing and inductors) is excluded.
- **RP** - Coil protective grilles – wire mesh to prevent foreign objects from entering the coil and to protect the coil from accidental contact with objects or people.
- **CM** - BMS connectivity setup – ModBus protocol included – accessory that enables the connection of the unit to external controllers via serial cable with RS-485 electrical standard and ModBus RTU protocol.
- **SSL** - thanks to the use of dedicated acoustic panels, ensures low noise emissions, particularly with regard to the EN12102-1:2022 standard. The reduction of the sound power level under A7/W55 conditions reaches 7 dB(A).

## Provided separately

- **SAS** - DHW sensor / Remote system sensor – in some system configurations (e.g. heat pump in parallel with the boiler on the same hydronic circuit and diverter valve for exclusion) it may be necessary to enable a system temperature sensor so that the unit-mounted controller can correctly manage operation.

  The remote system sensor controls the heat pump temperature only during the compressor start-up phase; shutdown is managed by the sensor installed on the heat pump flow line.
- **SPS** - Solar panel probe for GI3 – probe required to measure the temperature of the solar panels when the unit is integrated with a solar thermal system.
- **AG** - Anti-vibration kit – designed to prevent transmission of vibrations to the structure; must be installed under the unit, in the dedicated mounting holes.
- **VRC** - Condensate drip tray – galvanized sheet metal container to be installed at the base of the unit for collecting condensate water.
- **FY** - Y-strainer – contains a stainless steel mesh screen (500 µm filtration) that collects solid materials present in the water. Filtration prevents blockage and/or damage to the devices installed downstream of the strainer. Alternatively, it is possible to install a dirt separator that ensures a filtration level not greater than 1 mm (in this case, it is no longer necessary to install the Y-strainer).
- **FD** - Dirt separator – allows the heavier impurities present in the hydraulic circuit to be stopped and retained, as they are captured by a synthetic filter mesh and collected in a settling chamber. A magnetic device located inside the body of the dirt separator also makes it possible to trap ferromagnetic particles.
- **VDIS3** - Diverter valve – 3-way motorized ball valve Kvs 20.8, 1" 1/4 F connections, complete with actuator.
- **ACT** - Technical storage tank (see dedicated section)
- **VSA** - Anti-freeze thermal discharge valve – a valve capable of opening at 0°C to prevent ice formation inside the pipes.
- **RP** - Coil protection grilles – wire mesh to prevent foreign objects from entering the coil and to protect the coil from accidental contact with objects or people (supplied as a separate accessory and to be installed by the installer).
- **e-LITE**** - Color touch-screen wired controller, which can be used as a remote keypad for the heat pump, as it replicates the functions of the on-board unit display. It is equipped with local temperature sensing and time scheduling.
- **Hi-TV415**** - Color touchscreen wired remote controller for centralized management of a chiller/heat pump cascade, for up to 7 units.
- **Connect Box**** - Wi-Fi communication gateway for the Maxa Connect App.
- **GI3**** - External system management module - enables management of the following functions: recirculation pump control, plant-side mixing valve control, solar thermal integration control.
- **ISK**** - USB/RS485 serial converter – interface device capable of reading and writing control registers via the RS485 standard and converting them to a USB port that can be connected to any supervision system.
- **LNC**** - LAN-Wi-Fi router – device that allows the unit to be connected to a local network via Ethernet cable or Wi-Fi coverage for remote monitoring.
- **OVPN**** - 4G LAN-Wi-Fi router with VPN tunnelling – a device that allows you to connect the unit remotely to an industrial router using the secure OPENVPN service.

* Accessories that cannot be used simultaneously
** Accessories not usable simultaneously

**e-PRO**
Wi-Fi multifunction remote controller
**STANDARD**

**e-LITE**
Multifunction remote controller
**ACCESSORY**

**Hi-TV415**
Touch screen remote controller for cascade management (max 7 units)
**ACCESSORY**

| | | | 0121 | 0123 | 0125 | 0127 |
|---|---|---|---|---|---|---|
| **Cooling** | Cooling capacity (1) | kW | 17,4 | 18,9 | 19,8 | 22,3 |
| | Power input (1) | kW | 5,26 | 5,89 | 6,19 | 7,19 |
| | EER (1) | W/W | 3,31 | 3,21 | 3,20 | 3,10 |
| | Cooling capacity (2) | kW | 19,6 | 21,0 | 25,3 | 27,9 |
| | Power input (2) | kW | 4,02 | 4,38 | 5,32 | 6,43 |
| | EER (2) | W/W | 4,88 | 4,79 | 4,76 | 4,34 |
| | SEER (5) | W/W | 5,27 | 5,27 | 4,94 | 4,84 |
| | Water flow rate (1) | L/s | 0,83 | 0,90 | 0,95 | 1,07 |
| **Heating** | Heating capacity (3) | kW | 21,0 | 22,8 | 24,8 | 27,0 |
| | Input power (3) | kW | 4,31 | 4,78 | 5,37 | 6,21 |
| | COP (3) | W/W | 4,87 | 4,77 | 4,62 | 4,35 |
| | Heating capacity (4) | kW | 19,6 | 21,6 | 23,2 | 26,3 |
| | Power input (4) | kW | 6,13 | 6,79 | 7,66 | 8,74 |
| | COP (4) | W/W | 3,20 | 3,18 | 3,03 | 3,01 |
| | Heating capacity (12) | kW | 19,7 | 21,2 | 24,1 | 25,8 |
| | Power input (12) | kW | 7,38 | 7,97 | 9,56 | 10,3 |
| | COP (12) | W/W | 2,67 | 2,66 | 2,52 | 2,50 |
| | Thermal power (13) | kW | 17,5 | 18,6 | 19,5 | 21,1 |
| | Power input (13) | kW | 6,05 | 6,71 | 7,19 | 7,55 |
| | COP (13) | W/W | 2,89 | 2,77 | 2,71 | 2,79 |
| | SCOP (6) | W/W | 4,86 | 4,72 | 4,49 | 4,46 |
| | Water flow rate (4) | L/s | 0,59 | 0,65 | 0,69 | 0,79 |
| | Energy efficiency - water 35°C / 55°C - low / medium temperature | Class | A+++ / A++ | A+++ / A++ | A+++ / A++ | A+++ / A++ |
| **Compressor** | Type | - | Scroll DC Inverter | | | |
| | Number | - | 1 | 1 | 1 | 1 |
| | Refrigerant oil (type) | - | PZ46M | PZ46M | PZ46M | PZ46M |
| | Refrigerant oil (quantity) | mL | 900 | 900 | 900 | 900 |
| | Refrigerant circuits | - | 1 | | | |
| **Refrigerant** | Type | - | R290 | | | |
| | Refrigerant quantity (7) | kg | 1,7 | 1,7 | 2,1 | 2,1 |
| | Refrigerant quantity in tons of $CO_2$ equivalent (7) | Ton | 0,000034 | 0,000034 | 0,000042 | 0,000042 |
| | Operating pressure in chiller (high/low) | bar | 30,3 / 1,7 | | | |
| | Operating pressure in heat pump mode (high/low) | bar | 30,3 / 0,7 | | | |
| **Ventilation** | Type | - | EC | | | |
| | Number | - | 1 | | | |
| | Rated power (1) | kW | 0,40 | 0,43 | 0,59 | 0,58 |
| | Maximum absorbed power | kW | 0,83 | 0,83 | 0,83 | 0,83 |
| | Maximum absorbed current | A | 1,2 | 1,2 | 1,2 | 1,2 |
| | Nominal air flow rate | m³/h | 12520 | 12810 | 13770 | 13780 |
| **Internal heat exchanger** | Internal heat exchanger type | - | Plate / BPHE | | | |
| | No. of indoor heat exchangers | - | 1 | 1 | 1 | 1 |
| | Water content | L | 1,71 | 1,71 | 2,07 | 2,07 |
| **Hydraulic circuit** | Available head (1) | kPa | 128 | 121 | 128 | 117 |
| | Available head (4) | kPa | 150 | 146 | 149 | 142 |
| | Water content of hydronic circuit | L | 3,6 | 3,6 | 4,0 | 4,0 |
| | Maximum hydronic circuit pressure (safety valve setting) | bar | 6 | 6 | 6 | 6 |
| | Hydraulic connections | inch | 1” 1/4 M | 1” 1/4 M | 1” 1/4 M | 1” 1/4 M |
| | Minimum water volume (8) | L | 175 | 175 | 220 | 225 |
| | Rated pump power (1) | kW | 0,350 | 0,350 | 0,350 | 0,350 |
| | Maximum absorbed pump power | kW | 0,350 | 0,350 | 0,350 | 0,350 |
| | Maximum absorbed pump current | A | 2,5 | 2,5 | 2,5 | 2,5 |
| **Sound data** | Sound power level Lw (9) std / SSL | dB(A) | 72 / 70 | 73 / 71 | 75 / 73 | 76 / 74 |
| | Sound pressure Lp1 (10) std / SSL | dB(A) | 41 / 39 | 42 / 40 | 44 / 42 | 45 / 43 |
| | Sound power Lw (11) std / SSL | dB(A) | 64 / 57 | 64 / 57 | 65 / 58 | 65 / 58 |
| **Electrical data** | Power supply | - | 400V/3P+N+T/50Hz | | | |
| | Maximum absorbed power | kW | 11 | 11 | 13 | 13 |
| | Maximum absorbed current | A | 19 | 19 | 21 | 21 |
| | Maximum power input with antifreeze kit | kW | 11 | 11 | 13 | 13 |
| | Maximum current draw with antifreeze kit | A | 19 | 19 | 22 | 22 |

Performance referred to the following conditions, in accordance with standard UNI EN 14511:2022:
(1) Cooling: outdoor air temperature 35 °C; inlet/outlet water temperature 12/7 °C.
(2) Cooling: outdoor air temperature 35 °C; inlet/outlet water temperature 23/18 °C.
(3) Heating: outdoor air temperature 7 °C d.b. 6 °C w.b.; inlet/outlet water temperature 30/35 °C.
(4) Heating: outdoor air temperature 7 °C d.b. 6 °C w.b.; water inlet/outlet temp. 47/55 °C.
(5) Cooling: low temperature, variable output, constant flow rate.
(6) Heating: average climate conditions; Tbiv = -7 °C; low temperature, variable output, constant flow rate.
(7) Indicative data subject to change. For the correct data, always refer to the technical nameplate on the unit.
(8) Calculated for a 10 °C decrease in system water temperature with a defrost cycle lasting 6 minutes.
(9) Sound power: mode (1); value determined on the basis of measurements carried out in accordance with standard UNI EN ISO 9614-1.
(10) Sound pressure: value calculated from the sound power level in condition (9) using standard UNI EN ISO 3744:2010.
(11) Sound power: heating mode according to EN 12102:2022 Annex A; value determined on the basis of measurements carried out in accordance with UNI EN ISO 9614-1, in compliance with the requirements of Eurovent certification.
(12) Heating: outdoor air temperature 7 °C d.b. 6 °C w.b.; water inlet/outlet temp. 55/65 °C.
(13) Heating: outdoor air temperature -7 °C d.b. -8 °C w.b.; inlet/outlet water temp. 30/35 °C.
Note: the performance data shown are indicative and may be subject to change. Furthermore, the capacities declared at points (1), (2), (3) and (4) refer to the instantaneous output according to UNI EN 14511:2022. The data declared at points (5) and (6) are determined according to UNI EN 14825:2022.

# Dimensional Drawings

## i-290 0121 / 0127

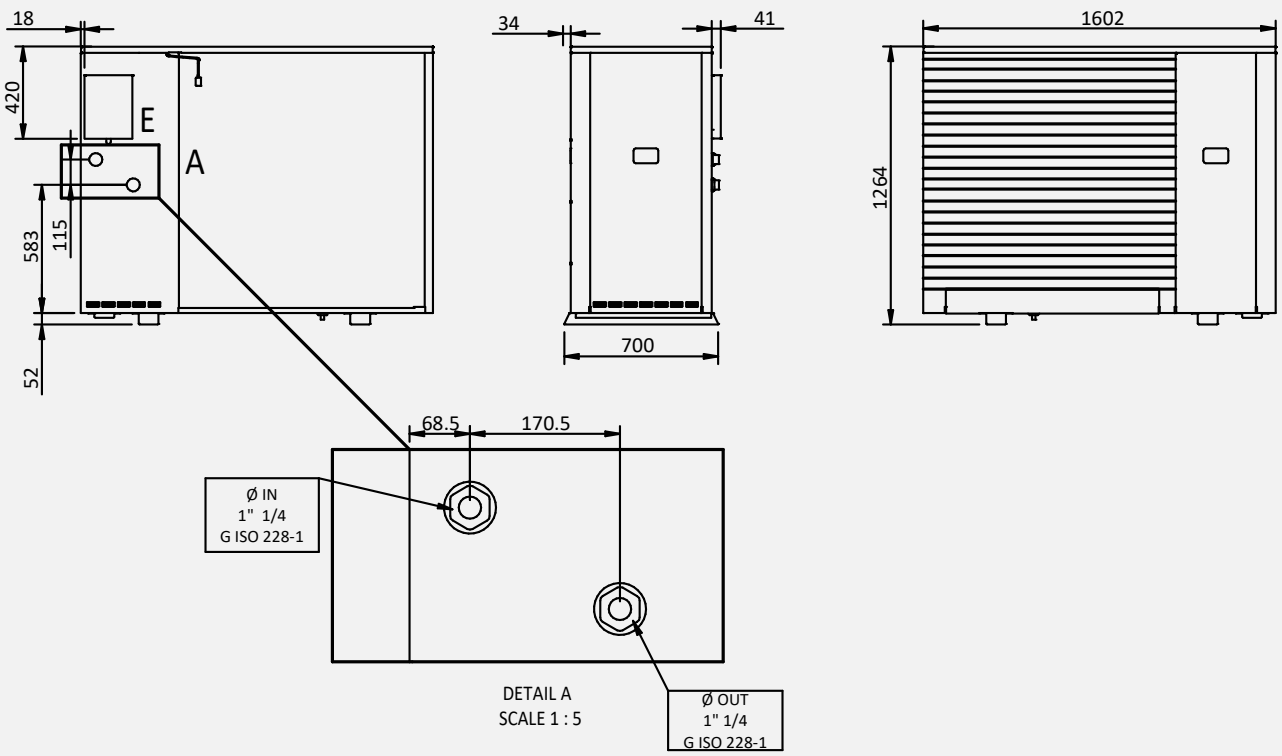


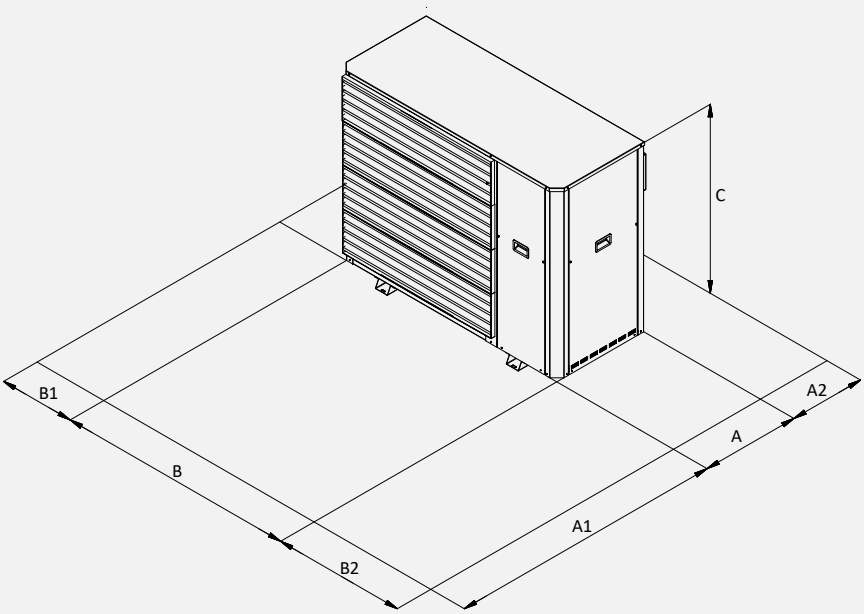


| Clearances | | A1 | A2 | B1 | B2 |
|---|---|---|---|---|---|
| 0121 | mm | 1500 | 400 | 400 | 500 |
| 0123 | mm | 1500 | 400 | 400 | 500 |
| 0125 | mm | 1500 | 400 | 400 | 500 |
| 0127 | mm | 1500 | 400 | 400 | 500 |

| | | 0121 | 0123 | 0125 | 0127 |
|---|---|---|---|---|---|
| L | mm | 1610 | 1610 | 1610 | 1610 |
| P | mm | 710 | 710 | 710 | 710 |
| H | mm | 1270 | 1270 | 1270 | 1270 |
| Shipping weight | kg | 276 | 276 | 285 | 285 |

Dimensions in mm

# System Diagram - Standard Application

| | | | | | | | |
|---|---|---|---|---|---|---|---|
| 1 | i-290 0123 heat pump | 7 | Expansion vessel | 15 | Y-strainer / Dirt separator filter (FD) | 22 | Mixed circuit pump (zone 2) |
| 2 | 3-way DHW/system valve (VDIS3) | 10 | Water connection | 19 | Degasser | 22bis | Direct circuit pump (zone 1) |
| 3 | DHW electric heater | 11 | Local thermostat (zone 1) | 20 | Mixing valve | 24 | Technical water tank |
| 4 | DHW temperature sensor (SAS) | 11bis | Local thermostat (zone 2) | 21 | Mixed circuit water sensor | 30 | GI3 - External extension module |
| 5 | DHW Tank (Caddy) | 13 | e-PRO control | | | | |

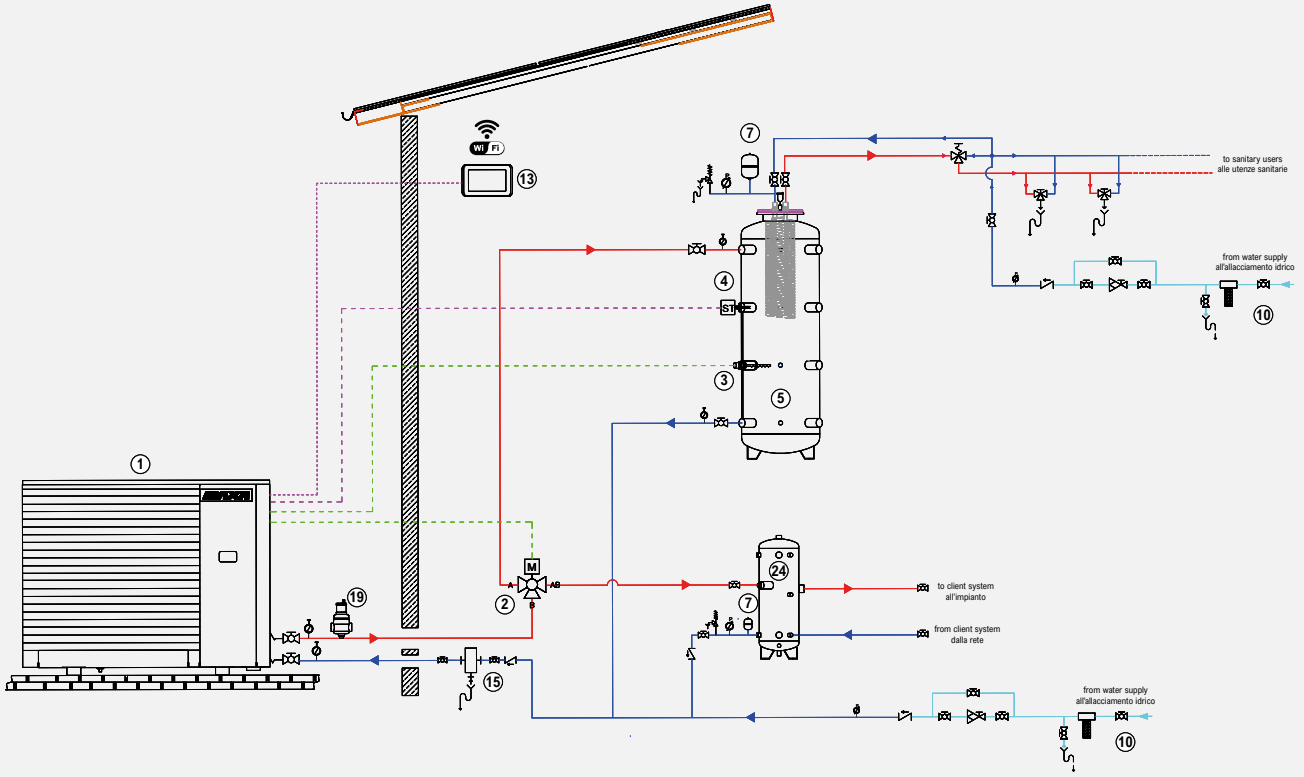


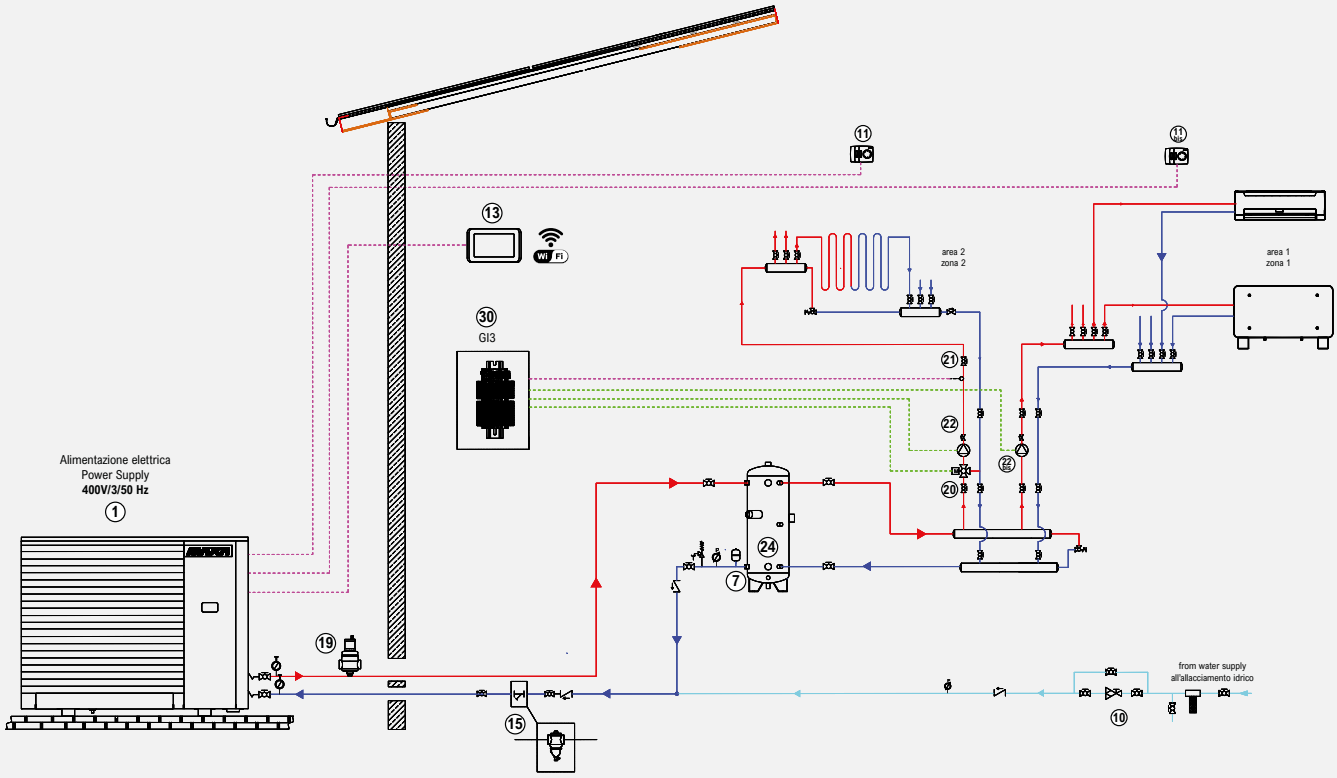


Purely indicative and non-binding diagram; for the construction of the system, it is necessary to refer to a design prepared by a qualified technician.

# Price list

| i-290 | | | 0121 | 0123 | 0125 | 0127 |
|---|---|---|---|---|---|---|
| i-290 | Reversible heat pump | € | 19.150 * | 19.436 * | 20.777 * | 21.160 * |
| e-PRO | Wired Remote control, Wi-Fi connected | € | included | | | |

| FACTORY-MOUNTED ACCESSORIES | | | | |
|---|---|---|---|---|
| SSL | Super silencing | € | 700 | |
| CM | Serial communication module for Modbus | € | 837 | |
| KA | Anti-freeze kit (heat exchanger + base) | € | 411 | |
| KA3 | Adhesive base heater | € | 254 | |
| RP | Battery protection nets | € | 511 | |
| TR2 | Cu/Al coil with anti-corrosion treatment | € | 1.973 | 2.154 |
| TR2C4 | Cu/Al coil and sheet metal with anti-corrosion treatment | € | 4.668 | 4.848 |
| **ACCESSORIES SUPPLIED SEPARATELY** | | | | |
| e-PRO* | Wired Remote control, Wi-Fi connected | code | 0100225#20010 | |
| | | € | 463 | |
| e-LITE* | Multifunction touch screen wired control | code | 011049#0101 | |
| | | € | 463 | |
| Hi-TV415* | Centralised multifunction touchscreen remote control | code | 0103123#00001 | |
| | | € | 659 | |
| Connect Box ** | Heat pump communication gateway and MAXA CONNECT | code | 011049#0103 | |
| | | € | 318 | |
| VSA | Anti-freeze thermal discharge valve | code | 0101125#32490010 | |
| | | € | 402 | |
| GI3 ** | Hardware expansion module | code | 018210000#01 | |
| | | € | 886 | |
| AG | Anti-vibration support | code | 015908#010050 | |
| | | € | 240 | |
| RP | Battery protection nets | code | 0101525#3501 | |
| | | € | 511 | |
| FD | Dirt separator filter | code | 0119100081 | |
| | | € | 424 | |
| FY | Y-strainer | code | 017121#4901 | |
| | | € | 92 | |
| SAS | DHW storage sensor - Remote sensor | code | 0110321000001 | |
| | | € | 48 | |
| SPS | Solar panel sensor | code | CH-CC-EN-ST-0015 | |
| | | € | 104 | |
| VDIS3 | Three-way diverting valve for domestic hot water production in a thermal storage tank | code | 011049#0102 | |
| | | € | 449 | |

* Remote control connected and air vent included
* Accessories that cannot be used simultaneously
** Accessories not usable simultaneously

# i-290 0240÷0250

## Monobloc inverter air-to-water reversible heat pump with R290

40 kW÷50 kW

Sizes i-290 0240 and 0250 represent the latest evolution in MAXA full inverter heat pump technology. By using the environmentally friendly R290 refrigerant, it is possible to achieve the final evolutionary step that further simplifies the design of systems fully managed by the heat pump alone. In fact, thanks to a maximum temperature of 78°, direct application on systems requiring high supply temperatures is also very straightforward.

MADE IN ITALY | REFRIGERANT 0.02 GWP | 78°C OUTLET WATER Supply Temperature | A++ ENERGY EFFICIENCY CLASS | WI-FI OPTIONAL | CASCADE MANAGEMENT FOR UP TO 7 UNITS | SUPER SILENCED VERSION | SCROLL INVERTER

### Construction Features

- Proprietary control system with microcontroller-based regulation, superheat control logic via electronic expansion valve.
- Compressors: DC inverter scroll.
- Fans: axial type with brushless DC motor.
- Source heat exchanger: copper tubes and aluminum fins with hydrophilic coating.
- User plate heat exchanger with AISI 304 stainless steel brazed plates, featuring low pressure drop on the water side.
- Refrigerant circuit made of copper tubing, including: 4-way reversing valve, electronic expansion valve, liquid separator, liquid receiver, high-pressure switch, pressure transducers, filter-drier, liquid sight glass with moisture indicator.
- Hydraulic circuit includes: plate heat exchanger, flow switch, safety valve (6 bar) and manual air vent valve.
- On request (optional), additional components such as a tank and circulation pump can be installed on board the unit.
- Electrical circuit equipped with a three-phase relay for overvoltage and undervoltage monitoring plus phase loss/sequence control. It indicates the presence of all three phases in the correct sequence and whether all three line-to-line voltages are within the set limits.
- Electrical circuit equipped with a digital input that can be activated by an external contact to reduce the sound power level by acting on the ventilation. This mode is particularly recommended for night-time operation.
- Presence of a leak detection sensor that ensures a high level of safety

### Logics and Controls:

- All units can operate in three different modes: heating, cooling, and domestic hot water, with specific programs that maximize performance in all conditions, including optional control via climatic compensation curve.
- The i-290 series units are capable of managing mixing valves, diverting valves and secondary-side circulation pumps; they are also able to control the solar thermal system, any integration with external heat sources, and integration with external Home/Building Automation or Home Automation systems.
- The i-290 0240-0250 series can be fully managed via the onboard unit display.
- The range is compatible with the various MAXA remote control models, in particular: **e-Lite**, suitable for local control of a single heat pump; **Hi-TV415**, suitable for local control of a cascade of heat pumps; **e-Pro**, which enables both local and remote control of a single heat pump; or **CONNECT BOX**, which functions as a gateway between the heat pump and the local Wi-Fi network.

## Operating Areas

**Hot**

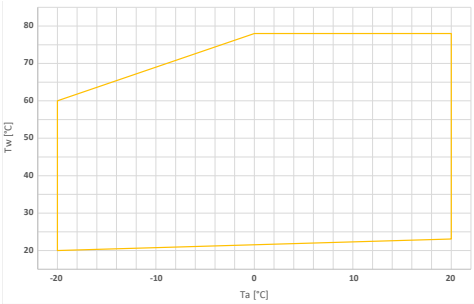


**Cold**

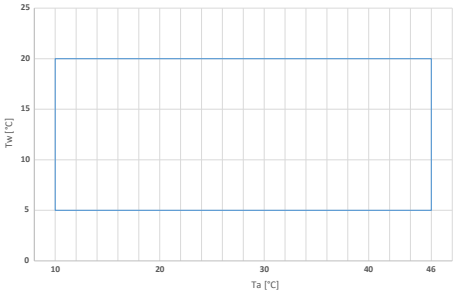


**DHW**

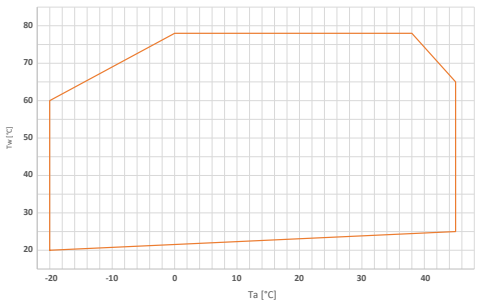


Tw: water temperature - Ta: outdoor air temperature

# Accessories

## Factory-installed

- **KA1** - Anti-freeze heater on: heat exchanger and pump - Electric heater installed on the front side of the plate heat exchanger, which is activated when the water temperature inside the exchanger drops below +4°C. If the selected hydronic kit includes the pump, this component will also be equipped with a heater that protects it from ice formation.
- **TR2** - Cu/Al coil with Silver Line surface treatment. Finned coil heat exchangers with copper tubes and aluminium fins, subjected to treatment with a special polyurethane-based paint for corrosion protection. The protection provides the coil with flexibility to withstand thermal contraction and expansion, UV resistance, and makes it dirt-repellent. The treatment ensures coil protection under virtually all environmental conditions: from marine to rural environments, from industrial to urban areas. For specific instructions on cleaning coils treated in this way, refer to the relevant chapter in the user-installer manual. The treatment withstands 6000 h according to ASTM B117.
- **TR2C4** - Anti-corrosion treatment on coil and sheet metal – includes a TR2-type treatment of the coil and, additionally, the hot-dip galvanized steel panels are painted so as to make them suitable for installation of the unit in C4H environments, in accordance with UNI EN 12944. The fastening hardware is suitable for installation in C4H environments.
- **RP** - Coil protection grid. Grids installed to protect finned coils. The grilles are used to protect the heat exchanger from accidental contact. They are especially recommended in locations where people or animals could damage, or be injured by, the finned heat exchanger. They can also be installed after the unit has been delivered.
- **CM** - BMS connectivity setup – ModBus protocol included – accessory that enables the connection of the unit to external controllers via serial cable with RS-485 electrical standard and ModBus RTU protocol.
- **IM** - Circuit breakers on compressors - Overcurrent switches applied to compressors, protecting components from faults caused by possible current spikes.
- **PS** - Fixed-speed AC circulation pump.
- **PSI** - AC circulation pump controlled via external inverter installed in the electrical panel.
- **PSEC** - Single EC pump equipped with integrated frequency converter (high head).
- **PS-SI** - Fixed-speed AC circulation pump with integrated 400-liter tank and 24-liter expansion vessel.
- **PSI-SI** - AC circulation pump controlled via external inverter installed in the electrical panel, with integrated 400-litre tank and 24-litre expansion vessel.
- **PSEC-SI** - Single EC pump equipped with integrated frequency converter (high head), with integrated 400-liter tank and 24-liter expansion vessel.
- **GL** - Packaging with wooden crate. Special packaging consisting of a wooden crate to protect the unit during transport. Optional; it is recommended for long-distance shipments (for example, container transport) or when the unit is stored in a warehouse where it may be subject to accidental damage. The boards that make up the structure comply with ISPM15 regulations.
- **SL** - Silenced Version. Involves the installation of sound-absorbing covers on the compressors, significantly reducing the unit's sound pressure level and ensuring quieter operation without altering performance.
- **SSL** - Super Silent Version. Maintains the features of the SL and incorporates an optimized diffuser that increases fan efficiency. This allows the fan speed to be reduced, lowering sound pressure and optimizing energy consumption, ensuring improved acoustic comfort.
- **EXSL** - Extra Silenced Version. Adds an additional sound-absorbing cover on the tandem compressors to the SL configuration, achieving a further noise reduction for applications that are particularly sensitive to acoustic impact.
- **EXSSL** - Extra Super Silenced version. Includes all SSL solutions and adds additional sound-absorbing cladding on the tandem compressors, for the maximum level of noise reduction available in the range.

## Provided separately

- **SAS** - Domestic hot water probe / Remote system probe – in some system configurations (e.g. heat pump in parallel with the boiler on the same hydronic circuit and diverter valve for boiler exclusion), it may be necessary to enable a system temperature probe so that the unit controller can correctly manage the operation. The remote system probe controls the heat pump temperature only during the compressor start-up phase; shutdown is managed by the probe located on the heat pump flow line.
- **SPS** - Solar panel probe for GI3 – probe required to measure the temperature of the solar panels when the unit is integrated with a solar thermal system.
- **AG** - Anti-vibration kit – designed to prevent transmission of vibrations to the structure; must be installed under the unit, in the dedicated mounting holes.
- **FY** - Y-strainer – contains a stainless steel mesh screen (500 µm filtration) that collects solid materials present in the water. Filtration prevents blockage and/or damage to the devices installed downstream of the strainer. Alternatively, it is possible to install a dirt separator that ensures a filtration level not greater than 1 mm (in this case, it is no longer necessary to install the Y-strainer).
- **FD-DA** - Air Separator Kit - Use as air separator (installation in the system supply line): component that allows continuous capture and expulsion of air and any other gases dissolved in the water of the hydraulic circuit. The removal efficiency of this device is very high, allowing the elimination of non-condensable gases present in the circuits down to the level of microbubbles. Use as dirt separator (installation in the return pipe, before the inlet to the heat pump): allows blocking and retaining the heavier impurities present in the hydraulic circuit, which are captured by a synthetic filter mesh and collected in a settling chamber. A magnetic device located inside the body of the dirt separator also allows interception of ferromagnetic particles.
- **VDIS4** - Three-way diverting valve for DHW production. Valve that diverts the water flow produced by the heat pump between the system and a buffer tank for the production of domestic hot water. Three-way motorized ball valve, DN (1"1/2), Kvs 28, complete with actuator, insulation shell and spacer, ensuring correct operation even with glycolated water. The power cable from the actuator is 1 metre long.

## Provided separately

- **VSA** - Anti-freeze thermal discharge valve – a valve capable of opening at 0°C to prevent ice formation inside the pipes.

** Accessories not usable simultaneously

## Accessories

- **RP** - Coil protection grilles – wire mesh to prevent foreign objects from entering the coil and to protect the coil from accidental contact with objects or people (supplied as a separate accessory and to be installed by the installer).
- **RV** - Grooved connection joint. Carbon steel stub pipe featuring, on one side, a grooved connection complete with clamp for connection to the heat pump, and on the other side a G 1" 1/2 M threaded connection. The kit consists of 2 stub pipes and 2 grooved clamps.
- **GI3**** - External system management module - enables management of the following functions: recirculation pump control, plant-side mixing valve control, solar thermal integration control.
- **ISK**** - USB/RS485 serial converter – interface device capable of reading and writing control registers via the RS485 standard and converting them to a USB port that can be connected to any supervision system.
- **LNC**** - LAN-Wi-Fi router – device that allows the unit to be connected to a local network via Ethernet cable or Wi-Fi coverage for remote monitoring.
- **OVPN**** - 4G LAN-Wi-Fi router with VPN tunnelling – a device that allows you to connect the unit remotely to an industrial router using the secure OPENVPN service.
- **e-LITE**** - Color touch-screen wired controller, which can be used as a remote keypad for the heat pump, as it replicates the functions of the on-board unit display. It is equipped with local temperature sensing and time scheduling.
- **e-Pro**** - Color touch-screen Wi-Fi wired controller that allows both local and remote control via the MyMaxa app.
- **Hi-TV415**** - Color touchscreen wired remote controller for centralized management of a chiller/heat pump cascade, for up to 7 units.
- **Connect Box**** - Wi-Fi communication gateway for the Maxa Connect App.

** Accessories not usable simultaneously

**e-PRO***
Wi-Fi multifunction remote controller
ACCESSORY

**e-LITE**
Multifunction remote controller
ACCESSORY

**Hi-TV415**
Touch screen remote controller for cascade management (max 7 units)
ACCESSORY

* Energy measurements not available

| | | | 0240 | 0250 |
|---|---|---|---|---|
| **Cooling** | Cooling capacity (1) | kW | 28,9 | 34,1 |
| | Power input (1) | kW | 9,20 | 11,0 |
| | E.E.R. (1) | W/W | 3,14 | 3,10 |
| | Cooling capacity (2) | kW | 34,5 | 37,0 |
| | Power input (2) | kW | 8,1 | 8,5 |
| | E.E.R. (2) | W/W | 4,26 | 4,34 |
| | SEER (5) | W/W | 4,86 | 4,80 |
| | Water flow rate (1) | L/s | 1,38 | 1,63 |
| | Pressure drops on the hydronic circuit side (1) | kPa | 24 | 26 |
| **Heating** | Heating capacity (3) | kW | 40,1 | 50,0 |
| | Input power (3) | kW | 9,8 | 11,9 |
| | C.O.P. (3) | W/W | 4,10 | 4,20 |
| | Heating capacity (4) | kW | 38,0 | 47,9 |
| | Power input (4) | kW | 13,1 | 16,5 |
| | C.O.P. (4) | W/W | 2,90 | 2,90 |
| | Heating capacity (12) | kW | 38,4 | 45,8 |
| | Power input (12) | kW | 16,0 | 18,8 |
| | C.O.P. (12) | W/W | 2,40 | 2,44 |
| | Thermal power (13) | kW | 34,6 | 38,1 |
| | Power input (13) | kW | 13,78 | 15,2 |
| | C.O.P. (13) | W/W | 2,51 | 2,52 |
| | SCOP (6) | W/W | 4,19 | 4,19 |
| | Water flow rate (4) | L/s | 1,14 | 1,43 |
| | Pressure drops on the hydronic circuit side (4) | kPa | 20 | 26 |
| | Energy efficiency - water 35°C / 55°C | Class | A++ / A++ | A++ / A++ |
| **Compressor** | Type | | Scroll DC Inverter | |
| | Number | | 2 | 2 |
| | Refrigerant oil (type) | | PZ46M | PZ46M |
| | Refrigerant oil (quantity) | mL | 1800 | 1800 |
| | Refrigerant circuits | | 1 | 1 |
| **Refrigerant** | Type | | R290 | |
| | Refrigerant quantity (7) | kg | 3,15 | 3,50 |
| | Refrigerant quantity in tons of $CO_2$ equivalent (7) | Ton | 0,000063 | 0,000070 |
| | Design pressure (high/low) chiller model | bar | 30,3 / 1,7 | |
| | Design pressure (high/low) heat pump model | bar | 30,3 / 0,7 | |
| **Outdoor zone fans** | Type | | EC | |
| | Number | | 1 | |
| | Rated power (1) | kW | 0,62 | 0,69 |
| | Maximum absorbed power | kW | 1,95 | 1,95 |
| | Maximum absorbed current | A | 3,3 | 3,3 |
| | Nominal air flow rate | m³/h | 17080 | 18490 |
| **Internal heat exchanger** | Internal heat exchanger type | | Plate / BPHE | |
| | No. of indoor heat exchangers | | 1 | 1 |
| | Water content | L | 2,80 | 3,48 |
| **Hydraulic circuit** | Water content of the hydronic circuit | L | 4,5 | 5,2 |
| | Maximum pressure of hydronic kit (safety valve setting) | bar | 6 | 6 |
| | Hydraulic connections | inch | 1" 1/2 (DN 40) | 1" 1/2 (DN 40) |
| | Minimum water volume (8) | L | 365 | 415 |
| **Sound data** | Sound power (9) | dB(A) | 82 | 83 |
| | Sound power level Lw SL configuration (9) | dB(A) | 81 | 82 |
| | Sound power level Lw EXSL configuration (9) | dB(A) | 80 | 81 |
| | Sound power level Lw SSL configuration (9) | dB(A) | 79 | 80 |
| | Sound power level Lw EXSSL configuration (9) | dB(A) | 78 | 79 |
| | Sound pressure level (10) at 1 m | dB(A) | 64/63/62/62/61 | 64/64/63/62/62 |
| | Sound power (11) STD-SL-EXSL | dB(A) | 74 | 75 |
| | Sound power level Lw configuration SSL-EXSSL (11) | dB(A) | 73 | 74 |
| **Electrical data** | Power supply | | 400V/3P+N+T/50Hz | |
| | Maximum absorbed power | kW | 23 | 27 |
| | Maximum absorbed current | A | 37 | 44 |
| | Maximum power input with antifreeze kit | kW | 23 | 27 |
| | Maximum current draw with antifreeze kit | A | 38 | 45 |

(1) Cooling: outdoor air temperature 35°C; inlet/outlet water temperature 12/7°C.
(2) Cooling: outdoor air temperature 35°C; inlet/outlet water temperature 23/18°C
(3) Heating: outdoor air temperature 7°C (dry bulb) 6°C (wet bulb); inlet/outlet water temperature 30/35°C.
(4) Heating: outdoor air temperature 7°C (dry bulb) 6°C (wet bulb); inlet/outlet water temperature 47/55°C
(5) Cooling: low temperature, variable output, constant flow rate.
(6) Heating: average climatic conditions; Tbiv = -7°C; low temperature, variable water outlet, fixed flow rate.
(7) Indicative data, subject to change. For the correct data, always refer to the technical nameplate on the unit.
(8) The indicated volume refers to the total required; the designer must ensure this requirement is met by taking into account the amount already present inside the unit, depending on the selected hydronic kit (please check this value in the technical data sheet).
(9) Sound power: mode (1); value determined on the basis of measurements carried out in accordance with standard UNI EN ISO 9614-1.
(10) Sound pressure: calculated from the sound power level using ISO 3744:2010, considering the units operating in free field conditions.
(11) Sound power: heating mode according to EN 12102:2022 Annex A; value determined on the basis of measurements carried out in accordance with UNI EN ISO 9614-1, in compliance with the requirements of Eurovent certification.
(12) Heating: outdoor air temperature 7 °C d.b. 6 °C w.b.; water inlet/outlet temp. 55/65 °C.
(13) Heating: outdoor air temperature -7 °C d.b. -8 °C w.b.; inlet/outlet water temp. 30/35 °C.

# Dimensional Drawings

## i-290 0240 / 0250

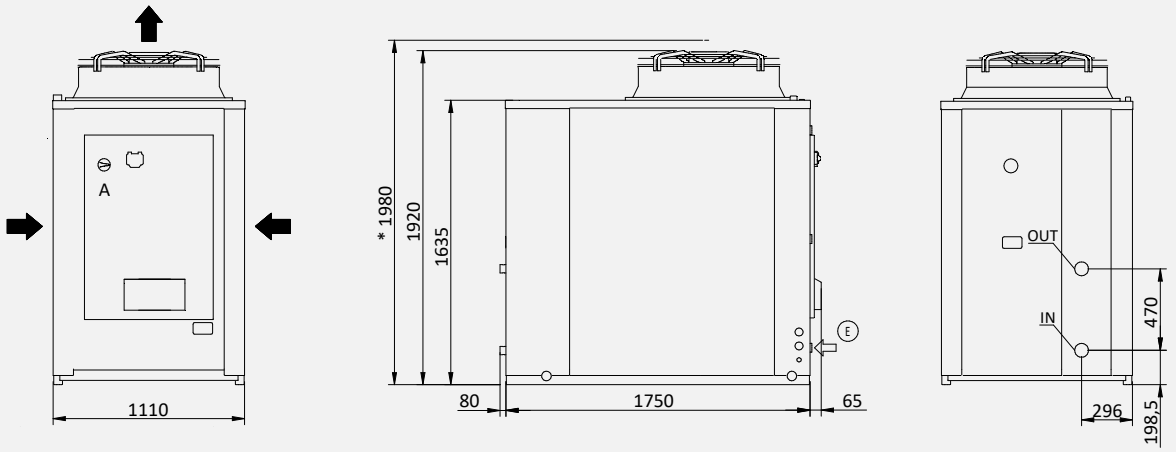


Version with tank kit

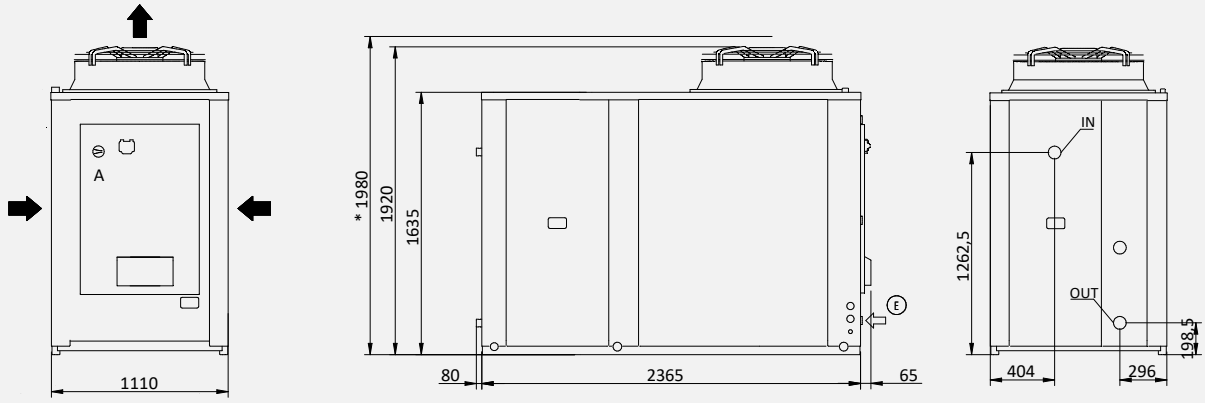


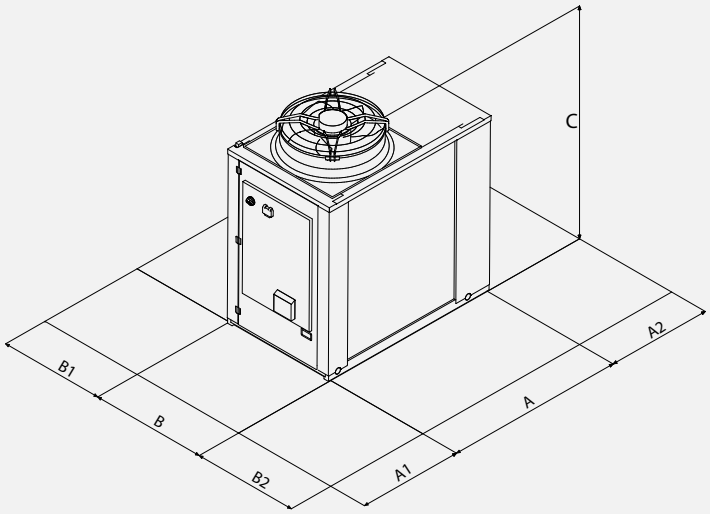


| Clearances | | A1 | A2 | B1 | B2 |
|---|---|---|---|---|---|
| 0240 | mm | 1200 | 1000 | 1500 | 1500 |
| 0250 | mm | 1200 | 1000 | 1500 | 1500 |

| | | 0240 | 0250 |
|---|---|---|---|
| L | mm | 1895 | 1895 |
| L (with tank) | mm | 2510 | 2510 |
| P | mm | 1110 | 1110 |
| H | mm | 1920 | 1920 |
| H (SSL) | mm | 1980 | 1980 |
| Shipping weight | kg | 510 | 525 |

IN/OUT: 1" 1/2 Grooved
E: Power supply input

Dimensions in mm

# System Diagram - Standard Application

| | | | | | | | |
|---|---|---|---|---|---|---|---|
| 1 | i-290 0240-0250 heat pump | 5 | DHW tank (Puffroller) | 10 | Water connection | 15 | Y-strainer |
| 2 | 3-way DHW/system valve (VDIS4) | 6 | Fast DHW heater | 12 | Hi-TV415 Control | 19 | FD-DA |
| 4 | DHW temperature sensor (SAS) | 7 | Expansion vessel | 13 | e-PRO control | 24 | Technical water tank (Puffroller) |

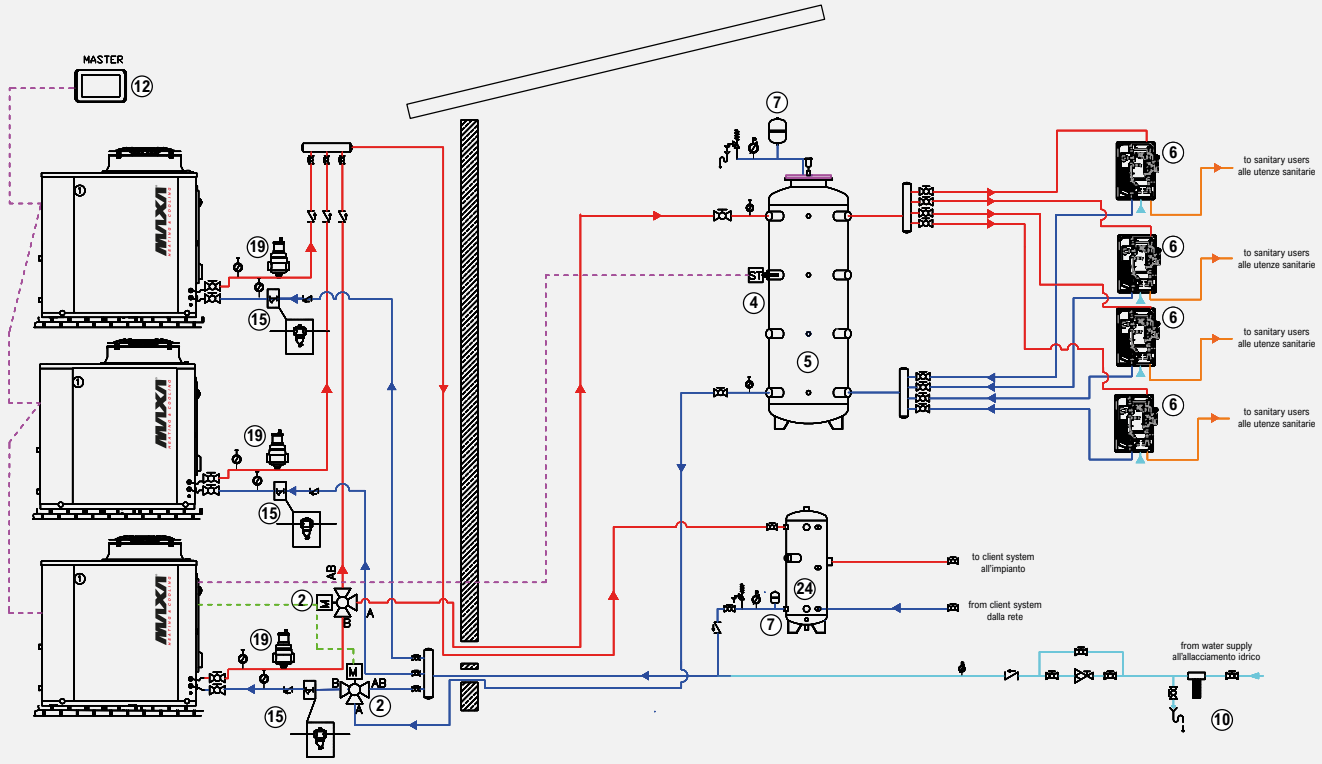


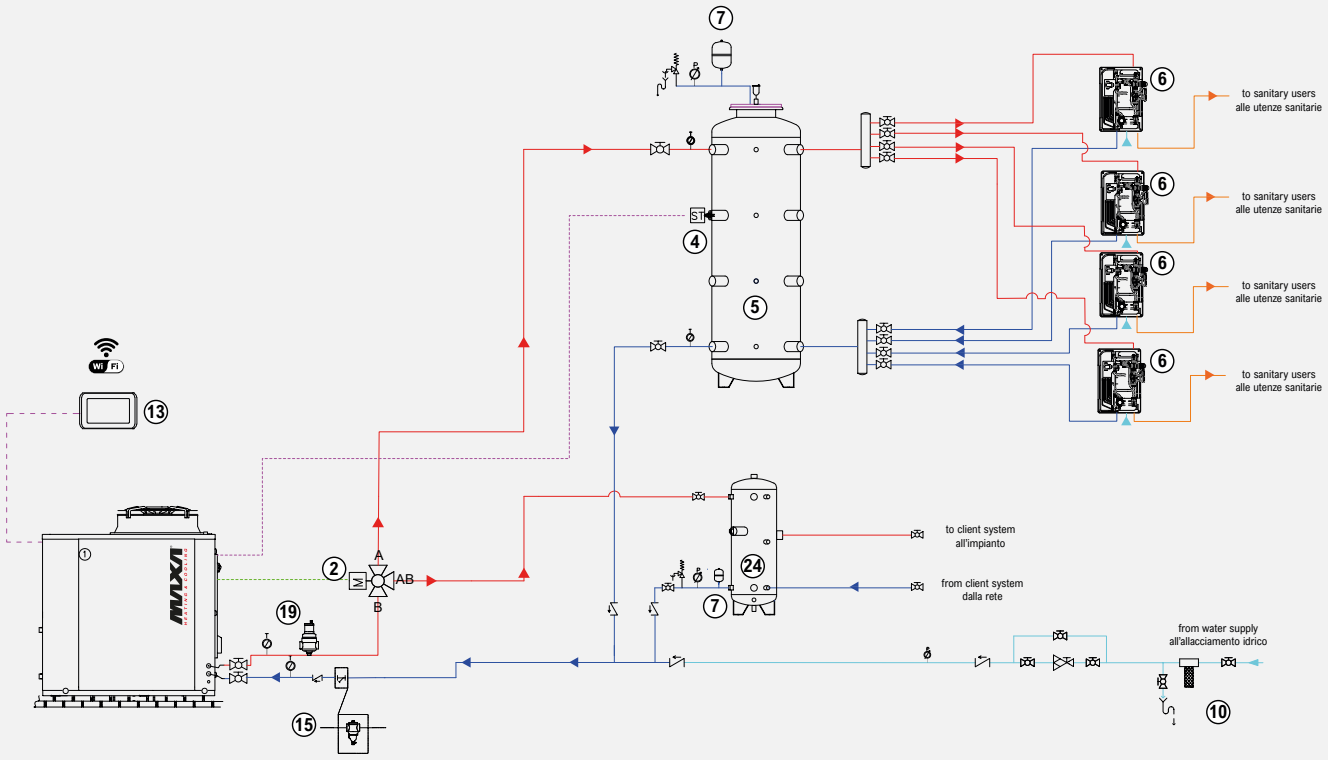


Purely indicative and non-binding diagram; for the construction of the system, it is necessary to refer to a design prepared by a qualified technician.

# Price list

| i-290 | | | 0240 | 0250 |
|---|---|---|---|---|
| i-290 | Reversible inverter heat pump | € | 40.430 | 41.472 |

| FACTORY-MOUNTED ACCESSORIES | | | | |
|---|---|---|---|---|
| CM | Serial communication module for Modbus | € | 879 | |
| GL | Crate packaging in wooden cage | € | 435 | |
| | Crate packaging in wooden frame (with YES accessory) | € | 602 | |
| IM | Magnetothermal circuit breakers | € | 775 | |
| KA1 | Adhesive resistance heat exchanger + pump resistance (if present) | € | 414 | |
| PS | Single AC pump | € | 2.037 | |
| PSI | Single variable-speed AC pump with inverter control | € | 2.911 | |
| PSEC | Single EC pump | € | 4.904 | |
| PS-SI | Single AC pump and buffer tank | € | 5.936 | |
| PSI-SI | Single inverter-driven modulating AC pump and buffer tank | € | 7.200 | |
| PSEC-SI | Single EC pump and buffer tank | € | 8.644 | |
| RP | Battery protection nets | € | 929 | |
| SL | Silencing | € | 399 | |
| EX SL | Extra Silencing | € | 1.789 | |
| SSL | Super soundproofing (includes SL) | € | 1.576 | |
| EX SSL | Extra Super silencing (includes EX SL) | € | 2.966 | |
| TR2 | Cu/Al coil with anti-corrosion treatment | € | 2.985 | 3.431 |
| TR2C4 | Cu/Al coil and sheet metal with anti-corrosion treatment | € | 6.243 | 6.688 |
| **ACCESSORIES SUPPLIED SEPARATELY** | | | | |
| e-PRO* | Wired Remote control, Wi-Fi connected | code | 0100225#20010 | |
| | | € | 463 | |
| e-LITE* | Multifunction touch screen wired control | code | 011049#0101 | |
| | | € | 463 | |
| Hi-TV415* | Centralised multifunction touchscreen remote control | code | 0103123#00001 | |
| | | € | 659 | |
| Connect Box ** | Heat pump communication gateway and MAXA CONNECT | code | 011049#0103 | |
| | | € | 318 | |
| GI3 ** | Hardware expansion module | code | 018210000#01 | |
| | | € | 886 | |
| FY | Y-strainer | code | 017221#NN01 | |
| | | € | 147 | |
| AG | Anti-vibration support | code | 019221#NN01 | |
| | | € | 520 | |
| RP | Battery protection nets | code | 0102524#2201 | |
| | | € | 929 | |
| FD-DA | Defanging Filter / Deaerator Kit | code | 0102724#250010 | |
| | | € | 1.906 | |
| SAS | DHW storage sensor - Remote sensor | code | 0110321000001 | |
| | | € | 48 | |
| SPS | Solar panel sensor | code | CH-CC-EN-ST-0015 | |
| | | € | 104 | |
| RV | Groovedv Connection Joint | code | 018221#NN01 | |
| | | € | 147 | |
| VDIS4 | Three-way diverting valve for domestic hot water production in a thermal storage tank | code | 011049#0094 | |
| | | € | 639 | |
| VSA | Anti-freeze drain valve for hydraulic circuit | code | 0101125#32520010 | |
| | | € | 556 | |

For accessories of the DAS monitoring system (ISK, LNC, OVPN), see chapter "Connection devices for Maxa DAS supervision system"
* Accessories that cannot be used simultaneously
** Accessories not usable simultaneously

# i-32V5

## Monobloc R32 air-to-water reversible inverter heat pump

6 kW÷18 kW

**11 models: the most compact and high-performance on the market!**
The use of inverter technology together with DC brushless motors ensures extremely high overall energy efficiency, both by reducing the specific consumption of each motor and thanks to the high modulation capability.
Extensive use of these technologies on all components results in high COP and EER values, with a significant increase in efficiency at partial loads.

| MADE IN ITALY | R32 REFRIGERANT 675 GWP | 60°C OUTLET WATER Supply Temperature | A+++ ENERGY EFFICIENCY CLASS | WI-FI OPTIONAL | CASCADE MANAGEMENT FOR UP TO 7 UNITS | MODBUS AVAILABLE AS STANDARD | SILENCED VERSION | COIL ANTICORROSION TREATMENT | FULL INVERTER SYSTEM |
|---|---|---|---|---|---|---|---|---|---|

### Construction Features

- Proprietary control system with microcontroller-based regulation, superheat control logic via electronic expansion valve.
- Compressors: Twin Rotary DC inverter
- Fans: axial type with brushless DC motor
- Source heat exchanger: optimized with a circuit and a finned coil with copper tubes and aluminum fins with hydrophilic treatment.
- User plate heat exchanger with AISI 304 stainless steel brazed plates, featuring low pressure drop on the water side.
- Refrigerant circuit made of copper tubing, including: condensing control, electronic thermostatic valve, 4-way reversing valve, high-pressure switches, liquid separator and receiver, service and control valves, high- and low-pressure transducers.
- Integrated hydraulic circuit with high-efficiency variable-speed brushless circulator, flow switch, air vent valve, overpressure valve (6 bar), pressure gauge, and system filling and drain cock.
- The KA version provides for the installation of a heating cable on the base of the heat pump at the condenser coil and a PET heater positioned on the plate heat exchanger. The technical and performance data are identical to those of the standard version.
- The SL version, in winter operating mode, features a maximum sound power limited to 53 dB(A), which can be reached under certain conditions.

### Logics and Controls:

- All units can operate in three different modes: heating, cooling, and domestic hot water, with specific programs that maximize performance in all conditions, including optional control via climatic compensation curve.
- The units of the V5 series are capable of managing mixing valves, diverting valves, and secondary-side circulation pumps; they are also able to control the solar thermal system, any integration with external heat sources, and integration with external Home/Building Automation or Home Automation systems. The entire i-32V5 series can be controlled remotely (accessory HI-TV415).
- Standard RS485 Modbus protocol.

## Operating Areas

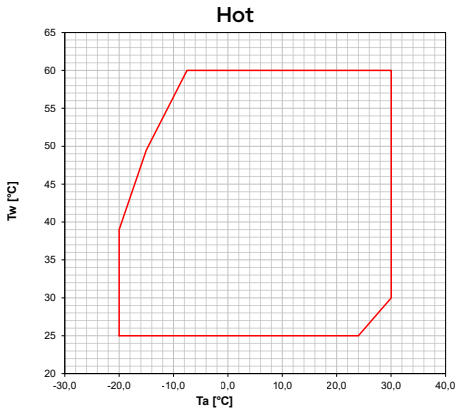


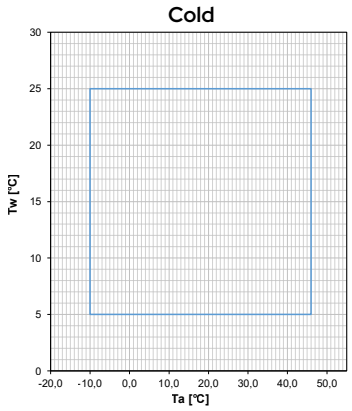


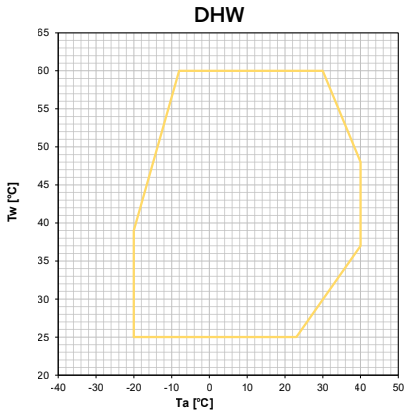


Tw: water temperature - Ta: outdoor air temperature

# Accessories

## Factory-installed

- **TR2** - Anti-corrosion treatment for coils – thanks to the treatment, the coil becomes flexible to withstand thermal expansion and contraction, mechanically resistant, protected against UV rays and dirt-repellent. Heat transfer losses are very limited. The treatment ensures coil protection in virtually all environmental conditions: from coastal to rural areas, from industrial to urban zones. The treatment withstands 6000 h according to ASTM B117.
- **GI *** - System management module - enables management of the following functions: management of the booster pump with the aid of a room thermostat (not supplied); management of the mixing valve on the system side in both heating and cooling modes; management of solar-thermal integration.

## Provided separately

- **SAS** - Domestic hot water probe / Remote system probe – in some system configurations (e.g. heat pump in parallel with the boiler on the same hydronic circuit and diverter valve for boiler exclusion), it may be necessary to enable a system temperature probe so that the unit controller can correctly manage the operation. The remote system probe controls the heat pump temperature only during the compressor start-up phase; shutdown is managed by the probe located on the heat pump flow line.
- **SPS** - Solar panel probe for GI3 – probe required to measure the temperature of the solar panels when the unit is integrated with a solar thermal system.
- **GI3**** - External system management module - enables management of the following functions: recirculation pump control, plant-side mixing valve control, solar thermal integration control.
- **AG** - Anti-vibration kit – designed to prevent transmission of vibrations to the structure; must be installed under the unit, in the dedicated mounting holes.
- **VRC** - Condensate drip tray – galvanized sheet metal container to be installed at the base of the unit for collecting condensate water.
- **FY** - Y-strainer – contains a stainless steel mesh screen (500 µm filtration) that collects solid materials present in the water. Filtration prevents blockage and/or damage to the devices installed downstream of the strainer. Alternatively, it is possible to install a dirt separator that ensures a filtration level not greater than 1 mm (in this case, it is no longer necessary to install the Y-strainer).
- **FD** - Dirt separator – allows the heavier impurities present in the hydraulic circuit to be stopped and retained, as they are captured by a synthetic filter mesh and collected in a settling chamber. A magnetic device located inside the body of the dirt separator also makes it possible to trap ferromagnetic particles.
- **VDIS2** - Diverting valve – 3-way motorized ball valve DN (1"1/4) Kvs 19.2, 1" ½ MMM connections, complete with actuator.
- **ACT** - Technical storage tank (see dedicated section).
- **VSA** - Anti-freeze thermal discharge valve – a valve capable of opening at 0°C to prevent ice formation inside the pipes.
- **ISK**** - USB/RS485 serial converter – interface device capable of reading and writing control registers via the RS485 standard and converting them to a USB port that can be connected to any supervision system.
- **LNC**** - LAN-Wi-Fi router – device that allows the unit to be connected to a local network via Ethernet cable or Wi-Fi coverage for remote monitoring.
- **OVPN**** - 4G LAN-Wi-Fi router with VPN tunnelling – a device that allows you to connect the unit remotely to an industrial router using the secure OPENVPN service.
- **i-CR2**** - Wall-mounted remote control – Modbus remote controller with negative LCD and capacitive keys. The device is intended to be used as a remote unit keypad with local temperature sensing and replicates the functions of the on-board unit controller.
- **e-LITE**** - Color touch-screen wired controller, which can be used as a remote keypad for the heat pump, as it replicates the functions of the on-board unit display. It is equipped with local temperature sensing and time scheduling.
- **e-Pro**** - Color touch-screen Wi-Fi wired controller that allows both local and remote control via the MyMaxa app.
- **Hi-TV415**** - Color touchscreen wired remote controller for centralized management of a chiller/heat pump cascade, for up to 7 units.
- **Connect Box**** - Wi-Fi communication gateway for the Maxa Connect App.

* Factory-mounted accessory available only for sizes 10-12-14-16
** Accessories not usable simultaneously

## Versions

- i-32V5/KA - Reversible heat pump with kit
- i-32V5SL - Silenced reversible heat pump
- i-32V5SL/KA - Soundproofed reversible heat pump with integrated antifreeze kit

**e-PRO**
Wi-Fi multifunction remote controller
ACCESSORY

**e-LITE**
Multifunction remote controller
ACCESSORY

**Hi-TV415**
Touch screen remote controller for cascade management (max 7 units)
ACCESSORY

| i-32V5 | | | 06A | 08A | 10 | 10T A | 12 |
|---|---|---|---|---|---|---|---|
| Cooling | Cooling capacity (1) | kW | 5,19 | 6,14 | 7,53 | 7,53 | 8,51 |
| | Power input (1) | kW | 1,64 | 1,97 | 2,39 | 2,39 | 2,79 |
| | E.E.R. (1) | W/W | 3,16 | 3,12 | 3,15 | 3,15 | 3,05 |
| | Cooling capacity (2) | kW | 6,37 | 8,03 | 9,50 | 9,50 | 11,6 |
| | Power input (2) | kW | 1,30 | 1,79 | 2,15 | 2,15 | 2,79 |
| | E.E.R. (2) | W/W | 4,90 | 4,49 | 4,41 | 4,41 | 4,16 |
| | SEER (5) | W/W | 4,42 | 4,51 | 4,34 | 4,34 | 4,43 |
| | Water flow rate (1) | L/s | 0,25 | 0,29 | 0,36 | 0,36 | 0,41 |
| | Pressure drops in the heat exchanger on the user side (1) | kPa | 3,2 | 5,3 | 6,9 | 6,9 | 8,8 |
| Heating | Heating capacity (3) | kW | 6,13 | 7,81 | 10,1 | 10,1 | 11,8 |
| | Input power (3) | kW | 1,25 | 1,71 | 2,28 | 2,28 | 2,73 |
| | C.O.P. (3) | W/W | 4,90 | 4,57 | 4,43 | 4,43 | 4,32 |
| | Heating capacity (4) | kW | 5,97 | 7,71 | 9,76 | 9,76 | 11,5 |
| | Power input (4) | kW | 1,58 | 2,11 | 2,80 | 2,80 | 3,33 |
| | C.O.P. (4) | W/W | 3,78 | 3,65 | 3,48 | 3,48 | 3,44 |
| | SCOP (6) | W/W | 4,46 | 4,46 | 4,53 | 4,53 | 4,47 |
| | Water flow rate (4) | L/s | 0,29 | 0,37 | 0,47 | 0,47 | 0,55 |
| | Pressure drops in the heat exchanger on the user side (4) | kPa | 4,4 | 8,6 | 9,7 | 9,7 | 13,1 |
| | Energy efficiency water 35°C / 55°C | | A+++/A++ | A+++/A++ | A+++/A++ | A+++/A++ | A+++/A++ |
| Compressor | Type | | Twin Rotary DC Inverter | | | | |
| | Number of compressors | | 1 | 1 | 1 | 1 | 1 |
| | Refrigerant oil (type) | | ESTER OIL VG74 | | | | |
| | Refrigerant oil (quantity) | L | 0,62 | 0,62 | 1 | 1 | 1 |
| | Refrigerant circuits | | 1 | 1 | 1 | 1 | 1 |
| Refrigerant | Type | | R32 | R32 | R32 | R32 | R32 |
| | Refrigerant quantity (7) | kg | 0,97 | 0,97 | 2,5 | 2,5 | 2,5 |
| | Tons of $CO_2$ equivalent (7) | Ton | 0,7 | 0,7 | 1,7 | 1,7 | 1,7 |
| | Design pressure (high/low) heat pump model | bar | 42,8/1,3 | 42,8/1,3 | 42,8/1,3 | 42,8/1,3 | 42,8/1,3 |
| | Design pressure (high/low) chiller model | bar | 42,8/3,5 | 42,8/3,5 | 42,8/3,5 | 42,8/3,5 | 42,8/3,5 |
| Outdoor zone fans | Type | | Brushless DC Motor | | | | |
| | Number | | 1 | 1 | 1 | 1 | 1 |
| Internal heat exchanger | Internal heat exchanger type | | Plate type | | | | |
| | No. of indoor heat exchangers | | 1 | 1 | 1 | 1 | 1 |
| | Water content | L | 0,6 | 0,6 | 1,2 | 1,2 | 1,2 |
| Hydronic circuit | Available head (1) | kPa | 74,9 | 71,0 | 68,9 | 68,9 | 63,4 |
| | Water content of the hydronic circuit | L | 1,14 | 1,14 | 1,8 | 1,8 | 1,8 |
| | Maximum water-side pressure | bar | 6 | 6 | 6 | 6 | 6 |
| | Hydraulic connections | inch | 1"M | 1"M | 1"M | 1"M | 1"M |
| | Minimum water volume (8) | L | 40 | 40 | 50 | 50 | 60 |
| | Maximum circulator power | kW | 0,095 | 0,095 | 0,075 | 0,075 | 0,075 |
| | Maximum absorbed current of circulator | A | 0,66 | 0,66 | 0,38 | 0,38 | 0,38 |
| | Energy Efficiency Index (EEI) circulator | | ≤ 0,21 | ≤ 0,21 | ≤ 0,21 | ≤ 0,21 | ≤ 0,21 |
| Sound emissions | Sound power level Lw (9) | dB(A) | 64 | 64 | 64 | 64 | 65 |
| | Sound power level Lw (10) | dB(A) | 62 | 62 | 63 | 63 | 63 |
| Electrical data | Power supply | | 230V/1/50Hz | | | 400V/3P +N+PE/50Hz | 230V/1/50Hz |
| | Maximum absorbed power | kW | 3,4 | 4,1 | 4,6 | 4,6 | 5,1 |
| | Maximum absorbed current | A | 15,5 | 18,7 | 20,2 | 6,6 | 22,1 |
| | Maximum power input with antifreeze kit | kW | 3,5 | 4,2 | 4,8 | 4,8 | 5,2 |
| | Maximum current draw with antifreeze kit | A | 15,9 | 19,1 | 20,7 | 7,0 | 22,7 |

(1) Cooling: outdoor air temperature 35°C; inlet/outlet water temperature 12/7°C.
(2) Cooling: outdoor air temperature 35°C; inlet/outlet water temperature 23/18°C.
(3) Heating: outdoor air temperature 7°C d.b. 6°C w.b.; water inlet/outlet temp. 30/35°C
(4) Heating: outdoor air temperature 7°C d.b. 6°C w.b.; water inlet/outlet temp. 40/45°C.
(5) Cooling: low temperature, variable output, constant flow rate.
(6) Heating: average climatic conditions; Tbiv = -7°C; low temperature, variable output, constant flow rate.
(7) Indicative data subject to change. For the correct data, always refer to the technical nameplate on the unit.
(8) Calculated for a reduction in system water temperature of 20°C with a defrost cycle lasting 6 minutes.
(9) Sound power: heating mode condition (3) according to EN 12102-1:2013; value determined on the basis of measurements carried out in accordance with standard UNI EN ISO 9614-1.
(10) Sound power: heating mode at partial load according to Annex A of EN 12102:2017; value determined on the basis of measurements carried out in accordance with UNI EN ISO 9614-1, in compliance with the requirements of the Eurovent and Heat Pump Keymark certifications.
The reported performance data are indicative and may be subject to change. Furthermore, the capacities declared at points (1), (2), (3) and (4) shall be understood as referring to the instantaneous power in accordance with UNI EN 14511. The data declared at points (5) and (6) are determined in accordance with UNI EN 14825.

| i-32V5 | | | 12T A | 14 | 14T A | 16 | 16T A | 18T A |
|---|---|---|---|---|---|---|---|---|
| Cooling | Cooling capacity (1) | kW | 8,51 | 11,5 | 11,5 | 13,8 | 13,8 | 15,0 |
| | Power input (1) | kW | 2,79 | 3,53 | 3,53 | 4,38 | 4,38 | 4,88 |
| | E.E.R. (1) | W/W | 3,05 | 3,25 | 3,25 | 3,15 | 3,15 | 3,08 |
| | Cooling capacity (2) | kW | 11,6 | 14,0 | 14,0 | 15,8 | 15,8 | 17,1 |
| | Power input (2) | kW | 2,79 | 2,59 | 2,59 | 3,15 | 3,15 | 3,59 |
| | E.E.R. (2) | W/W | 4,16 | 5,40 | 5,40 | 5,02 | 5,02 | 4,76 |
| | SEER (5) | W/W | 4,43 | 4,77 | 4,77 | 4,94 | 4,94 | 5,05 |
| | Water flow rate (1) | L/s | 0,41 | 0,55 | 0,55 | 0,66 | 0,66 | 0,71 |
| | Pressure drops in the heat exchanger on the user side (1) | kPa | 8,8 | 12,9 | 12,9 | 17,5 | 17,5 | 20,6 |
| Heating | Heating capacity (3) | kW | 11,8 | 14,1 | 14,1 | 16,3 | 16,3 | 17,9 |
| | Input power (3) | kW | 2,73 | 2,91 | 2,91 | 3,49 | 3,49 | 4,07 |
| | C.O.P. (3) | W/W | 4,32 | 4,85 | 4,85 | 4,67 | 4,67 | 4,40 |
| | Heating capacity (4) | kW | 11,5 | 13,6 | 13,6 | 15,8 | 15,8 | 17,3 |
| | Power input (4) | kW | 3,33 | 3,55 | 3,55 | 4,24 | 4,24 | 4,92 |
| | C.O.P. (4) | W/W | 3,44 | 3,82 | 3,82 | 3,72 | 3,72 | 3,52 |
| | SCOP (6) | W/W | 4,47 | 4,48 | 4,48 | 4,58 | 4,58 | 4,46 |
| | Water flow rate (4) | L/s | 0,55 | 0,65 | 0,65 | 0,76 | 0,76 | 0,83 |
| | Pressure drops in the heat exchanger on the user side (4) | kPa | 13,1 | 13,0 | 13,0 | 17,6 | 17,6 | 21,0 |
| | Energy efficiency water 35°C / 55°C | | A+++/A++ | A+++/A++ | A+++/A++ | A+++/A++ | A+++/A++ | A+++/A++ |
| Compressor | Type | | Twin Rotary DC Inverter | | | | | |
| | Number of compressors | | 1 | 1 | 1 | 1 | 1 | 1 |
| | Refrigerant oil (type) | | ESTER OIL VG74 | | | | | |
| | Refrigerant oil (quantity) | L | 1 | 1,4 | 1,4 | 1,4 | 1,4 | 1,4 |
| | Refrigerant circuits | | 1 | 1 | 1 | 1 | 1 | 1 |
| Refrigerant | Type | | R32 | R32 | R32 | R32 | R32 | R32 |
| | Refrigerant quantity (7) | kg | 2,5 | 3,2 | 3,2 | 3,5 | 3,5 | 3,5 |
| | Tons of $CO_2$ equivalent (7) | Ton | 1,7 | 2,2 | 2,2 | 2,4 | 2,4 | 2,4 |
| | Design pressure (high/low) heat pump model | bar | 42,8/1,3 | 42,8/1,3 | 42,8/1,3 | 42,8/1,3 | 42,8/1,3 | 42,8/1,3 |
| | Design pressure (high/low) chiller model | bar | 42,8/3,5 | 42,8/3,5 | 42,8/3,5 | 42,8/3,5 | 42,8/3,5 | 42,8/3,5 |
| Outdoor zone fans | Type | | Brushless DC Motor | | | | | |
| | Number | | 1 | 2 | 2 | 2 | 2 | 2 |
| Internal heat exchanger | Internal heat exchanger type | | Plate type | | | | | |
| | No. of indoor heat exchangers | | 1 | 1 | 1 | 1 | 1 | 1 |
| | Water content | L | 1,2 | 1,7 | 1,7 | 1,7 | 1,7 | 1,7 |
| Hydronic circuit | Available head (1) | kPa | 63,4 | 75,0 | 75,0 | 62,3 | 62,3 | 55,6 |
| | Water content of the hydronic circuit | L | 1,8 | 3,0 | 3,0 | 3,0 | 3,0 | 3,0 |
| | Maximum water-side pressure | bar | 6 | 6 | 6 | 6 | 6 | 6 |
| | Hydraulic connections | inch | 1"M | 1"M | 1"M | 1"M | 1"M | 1"M |
| | Minimum water volume (8) | L | 60 | 60 | 60 | 70 | 70 | 70 |
| | Maximum circulator power | kW | 0,075 | 0,14 | 0,14 | 0,14 | 0,14 | 0,14 |
| | Maximum absorbed current of circulator | A | 0,38 | 1,10 | 1,10 | 1,10 | 1,10 | 1,10 |
| | Energy Efficiency Index (EEI) circulator | | ≤ 0,21 | ≤ 0,23 | ≤ 0,23 | ≤ 0,23 | ≤ 0,23 | ≤ 0,23 |
| Sound emissions | Sound power level Lw (9) | dB(A) | 65 | 68 | 68 | 68 | 68 | 68 |
| | Sound power level Lw (10) | dB(A) | 63 | 66 | 66 | 66 | 66 | 66 |
| Electrical data | Power supply | | 400V/3P +N+PE/50Hz | 230V/1/50Hz | 400V/3P +N+PE/50Hz | 230V/1/50Hz | 400V/3P +N+PE/50Hz | 400V/3P +N+PE/50Hz |
| | Maximum absorbed power | kW | 5,1 | 6,6 | 6,6 | 7,0 | 7,0 | 8,3 |
| | Maximum absorbed current | A | 7,3 | 28,6 | 9,5 | 30,4 | 10,1 | 12,0 |
| | Maximum power input with antifreeze kit | kW | 5,2 | 6,7 | 6,7 | 7,1 | 7,1 | 8,5 |
| | Maximum current draw with antifreeze kit | A | 7,5 | 29,2 | 9,7 | 31,0 | 10,3 | 12,2 |

(1) Cooling: outdoor air temperature 35°C; inlet/outlet water temperature 12/7°C.
(2) Cooling: outdoor air temperature 35°C; inlet/outlet water temperature 23/18°C.
(3) Heating: outdoor air temperature 7°C d.b. 6°C w.b.; water inlet/outlet temp. 30/35°C
(4) Heating: outdoor air temperature 7°C d.b. 6°C w.b.; water inlet/outlet temp. 40/45°C.
(5) Cooling: low temperature, variable output, constant flow rate.
(6) Heating: average climatic conditions; Tbiv = -7°C; low temperature, variable output, constant flow rate.
(7) Indicative data subject to change. For the correct data, always refer to the technical nameplate on the unit.
(8) Calculated for a reduction in system water temperature of 20°C with a defrost cycle lasting 6 minutes.
(9) Sound power: heating mode condition (3) according to EN 12102-1:2013; value determined on the basis of measurements carried out in accordance with standard UNI EN ISO 9614-1.
(10) Sound power: heating mode at partial load according to Annex A of EN 12102:2017; value determined on the basis of measurements carried out in accordance with UNI EN ISO 9614-1, in compliance with the requirements of the Eurovent and Heat Pump Keymark certifications.
The reported performance data are indicative and may be subject to change. Furthermore, the capacities declared at points (1), (2), (3) and (4) shall be understood as referring to the instantaneous power in accordance with UNI EN 14511. The data declared at points (5) and (6) are determined in accordance with UNI EN 14825.

| i-32V5 SL | | | 08A SL | 12 SL | 12T A SL | 16 SL | 16T A SL |
|---|---|---|---|---|---|---|---|
| **Cooling** | Cooling capacity (1) | kW | 6,14 | 8,51 | 8,51 | 13,8 | 13,8 |
| | Power input (1) | kW | 1,97 | 2,79 | 2,79 | 4,38 | 4,38 |
| | E.E.R. (1) | W/W | 3,12 | 3,05 | 3,05 | 3,15 | 3,15 |
| | Cooling capacity (2) | kW | 8,03 | 11,6 | 11,6 | 15,8 | 15,8 |
| | Power input (2) | kW | 1,79 | 2,79 | 2,79 | 3,15 | 3,15 |
| | E.E.R. (2) | W/W | 4,49 | 4,16 | 4,16 | 5,02 | 5,02 |
| | SEER (5) | W/W | 4,51 | 4,43 | 4,43 | 4,94 | 4,94 |
| | Water flow rate (1) | L/s | 0,29 | 0,41 | 0,41 | 0,66 | 0,66 |
| | Pressure drops in the heat exchanger on the user side (1) | kPa | 5,3 | 8,8 | 8,8 | 17,5 | 17,5 |
| **Heating** | Heating capacity (3) | kW | 4,78 | 7,35 | 7,35 | 8,65 | 8,65 |
| | Input power (3) | kW | 0,95 | 1,52 | 1,52 | 1,68 | 1,68 |
| | C.O.P. (3) | W/W | 5,03 | 4,84 | 4,84 | 5,15 | 5,15 |
| | Heating capacity (4) | kW | 4,72 | 7,14 | 7,14 | 8,37 | 8,37 |
| | Power input (4) | kW | 1,18 | 1,85 | 1,85 | 2,04 | 2,04 |
| | C.O.P. (4) | W/W | 3,88 | 3,85 | 3,85 | 4,10 | 4,10 |
| | SCOP (6) | W/W | 4,57 | 4,58 | 4,58 | 4,82 | 4,82 |
| | Water flow rate (4) | L/s | 0,22 | 0,34 | 0,34 | 0,40 | 0,40 |
| | Pressure drops in the heat exchanger on the user side (4) | kPa | 2,9 | 6,1 | 6,1 | 8,1 | 8,1 |
| | Energy efficiency water 35°C / 55°C | | A+++/A++ | A+++/A++ | A+++/A++ | A+++/A++ | A+++/A++ |
| **Compressor** | Type | | Twin Rotary DC Inverter | | | | |
| | Number of compressors | | 1 | 1 | 1 | 1 | 1 |
| | Refrigerant oil (type) | | ESTER OIL VG74 | | | | |
| | Refrigerant oil (quantity) | L | 0,62 | 1 | 1 | 1,4 | 1,4 |
| | Refrigerant circuits | | 1 | 1 | 1 | 1 | 1 |
| **Refrigerant** | Type | | R32 | R32 | R32 | R32 | R32 |
| | Refrigerant quantity (7) | kg | 2,5 | 2,5 | 2,5 | 3,5 | 3,5 |
| | Tons of $CO_2$ equivalent (7) | Ton | 0,7 | 1,7 | 1,7 | 2,4 | 2,4 |
| | Design pressure (high/low) heat pump model | bar | 42,8/1,3 | 42,8/1,3 | 42,8/1,3 | 42,8/1,3 | 42,8/1,3 |
| | Design pressure (high/low) chiller model | bar | 42,8/3,5 | 42,8/3,5 | 42,8/3,5 | 42,8/3,5 | 42,8/3,5 |
| **Outdoor zone fans** | Type | | Brushless DC Motor | | | | |
| | Number | | 1 | 1 | 1 | 2 | 2 |
| **Internal heat exchanger** | Internal heat exchanger type | | Plate type | | | | |
| | No. of indoor heat exchangers | | 1 | 1 | 1 | 1 | 1 |
| | Water content | L | 0,6 | 1,2 | 1,2 | 1,7 | 1,7 |
| **Hydraulic circuit** | Available head (1) | kPa | 71,0 | 63,4 | 63,4 | 62,3 | 62,3 |
| | Water content of the hydronic circuit | L | 1,1 | 1,8 | 1,8 | 3,0 | 3,0 |
| | Maximum water-side pressure | bar | 6 | 6 | 6 | 6 | 6 |
| | Hydraulic connections | inch | 1"M | 1"M | 1"M | 1"M | 1"M |
| | Minimum water volume (8) | L | 40 | 60 | 60 | 70 | 70 |
| | Maximum circulator power | kW | 0,10 | 0,08 | 0,08 | 0,14 | 0,14 |
| | Maximum absorbed current of circulator | A | 0,66 | 0,38 | 0,38 | 1,10 | 1,10 |
| | Energy Efficiency Index (EEI) circulator | | ≤ 0,21 | ≤ 0,21 | ≤ 0,21 | ≤ 0,23 | ≤ 0,23 |
| **Sound emissions** | Sound power level Lw (9) | dB(A) | 53 | 53 | 53 | 53 | 53 |
| | Sound power level Lw (10) | dB(A) | 53 | 53 | 53 | 53 | 53 |
| **Electrical data** | Power supply | | 230V/1/50Hz | | 400V/3P +N+PE/50Hz | 230V/1/50Hz | 400V/3P +N+PE/50Hz |
| | Maximum absorbed power | kW | 4,1 | 5,1 | 5,1 | 7,0 | 7,0 |
| | Maximum absorbed current | A | 18,7 | 22,1 | 7,3 | 30,4 | 10,1 |
| | Maximum power input with antifreeze kit | kW | 4,2 | 5,2 | 5,2 | 7,1 | 7,1 |
| | Maximum current draw with antifreeze kit | A | 19,1 | 22,7 | 7,5 | 31,0 | 10,3 |

(1) Cooling: outdoor air temperature 35°C; inlet/outlet water temperature 12/7°C.
(2) Cooling: outdoor air temperature 35°C; inlet/outlet water temperature 23/18°C.
(3) Heating: outdoor air temperature 7°C d.b. 6°C w.b.; water inlet/outlet temp. 30/35°C.
(4) Heating: outdoor air temperature 7°C d.b. 6°C w.b.; water inlet/outlet temp. 40/45°C.
(5) Cooling: low temperature, variable output, constant flow rate.
(6) Heating: average climatic conditions; Tbiv = -7°C; low temperature, variable output, constant flow rate.
(7) Indicative data subject to change. For the correct data, always refer to the technical nameplate on the unit.
(8) Calculated for a reduction in system water temperature of 20°C with a defrost cycle lasting 6 minutes.
(9) Sound power: heating mode condition (3) according to EN 12102-1:2013; value determined on the basis of measurements carried out in accordance with standard UNI EN ISO 9614-1.
(10) Sound power: heating mode at partial load according to Annex A of EN 12102:2017; value determined on the basis of measurements carried out in accordance with UNI EN ISO 9614-1, in compliance with the requirements of the Eurovent and Heat Pump Keymark certifications.
The reported performance data are indicative and may be subject to change. Furthermore, the capacities declared at points (1), (2), (3) and (4) shall be understood as referring to the instantaneous power in accordance with UNI EN 14511. The data declared at points (5) and (6) are determined in accordance with UNI EN 14825.

# Dimensional Drawings

## i-32V5 06A / 08A / SL08A

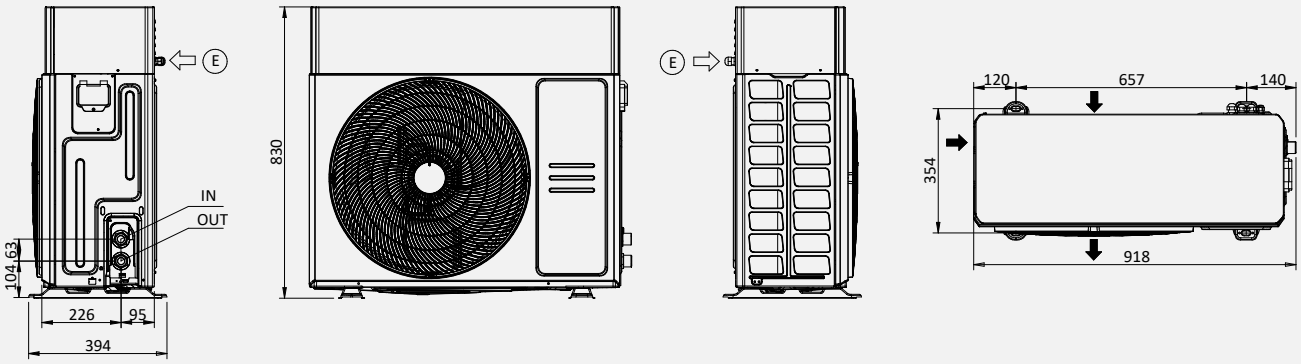


## i-32V5 10 / 10T A / 12 / SL12 / 12T A / SL12T A

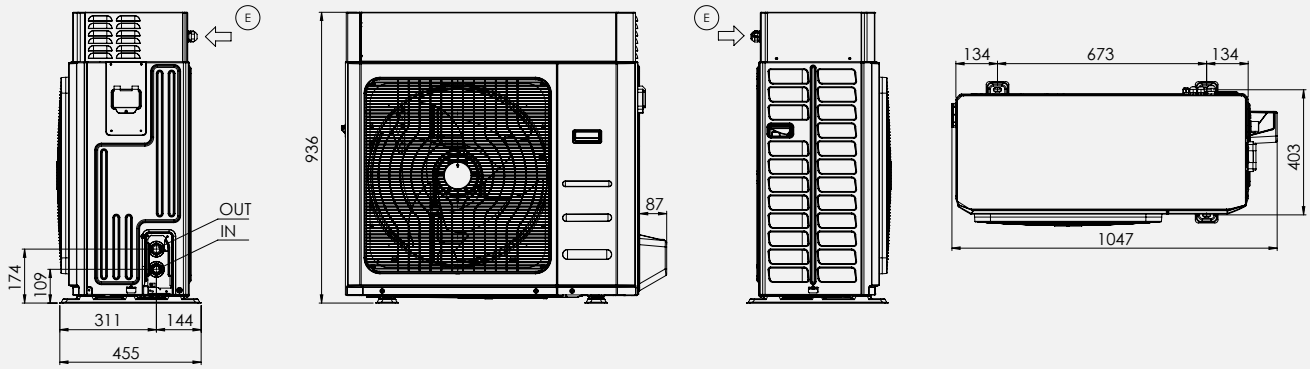


## i-32V5 14 / 14T A / 16 / SL16 / 16T A / SL16T A / 18T A

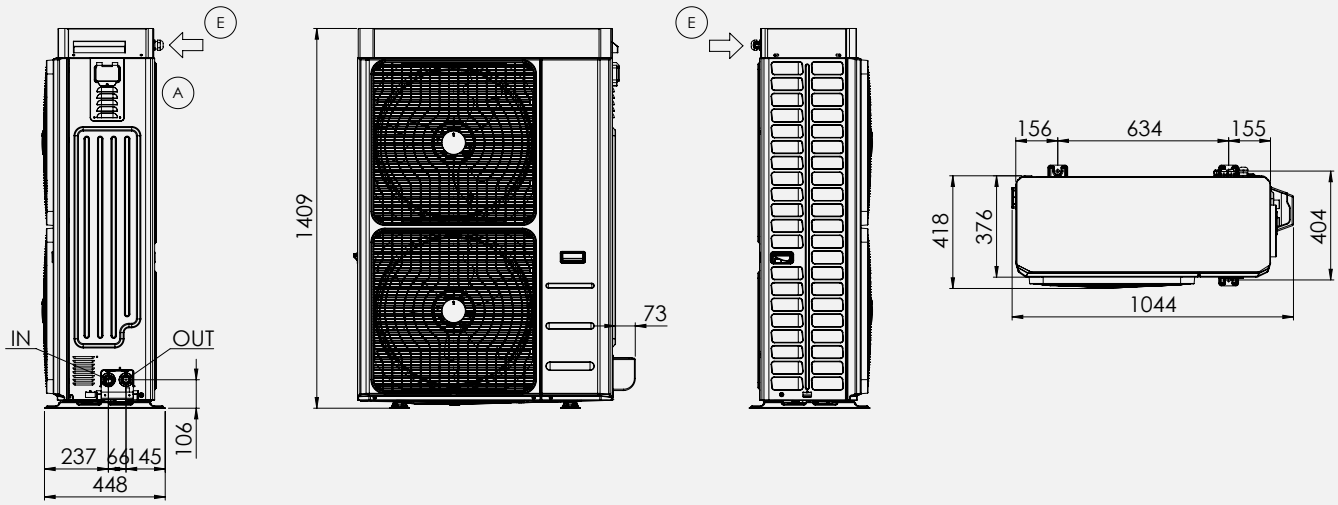


| | | 06A 08A / SL08A | | 10 / 10T A 12 / SL12 / 12T A / SL12T A | | | | 14 | 14T A | 16 SL16 | 16T A SL16T A | 18T A |
|---|---|---|---|---|---|---|---|---|---|---|---|---|
| L | mm | 918 | 918 | 1.047 | 1.047 | 1.047 | 1.047 | 1.044 | 1.044 | 1.044 | 1.044 | 1.044 |
| P | mm | 394 | 394 | 455 | 455 | 455 | 455 | 455 | 455 | 455 | 455 | 455 |
| H | mm | 830 | 830 | 936 | 936 | 936 | 936 | 1.409 | 1.409 | 1.409 | 1.409 | 1.409 |
| Shipping weight | kg | 77 | 77 | 110 | 110 | 110 | 110 | 134 | 148 | 140 | 154 | 154 |

IN/OUT: 1"M G
E: Power supply input

Dimensions in mm

# System Diagram - Standard Application

| | | | | | | | |
|---|---|---|---|---|---|---|---|
| 1 | i-32V5 heat pump | 9 | Summer/Winter valve | 15 | Y-strainer / Dirt separator filter (FD) | 24 | Technical water tank |
| 2 | 3-way DHW/system valve (VDIS2) | 10 | Water connection | 16 | Technical buffer tank ACT | 30 | GI3 - Hardware expansion module |
| 3 | DHW electric heater | 11 | Local thermostat (zone 1) | 20 | Mixing valve | 31 | Season change summer/winter |
| 4 | DHW temperature sensor (SAS) | 11bis | Local thermostat (zone 2) | 21 | Mixed circuit water sensor | | |
| 5 | DHW Tank (Caddy) | 13 | e-PRO control | 22 | Mixed circuit pump | | |
| 7 | Expansion vessel | 14 | Electric heater ACT | 22bis | Direct circuit pump | | |

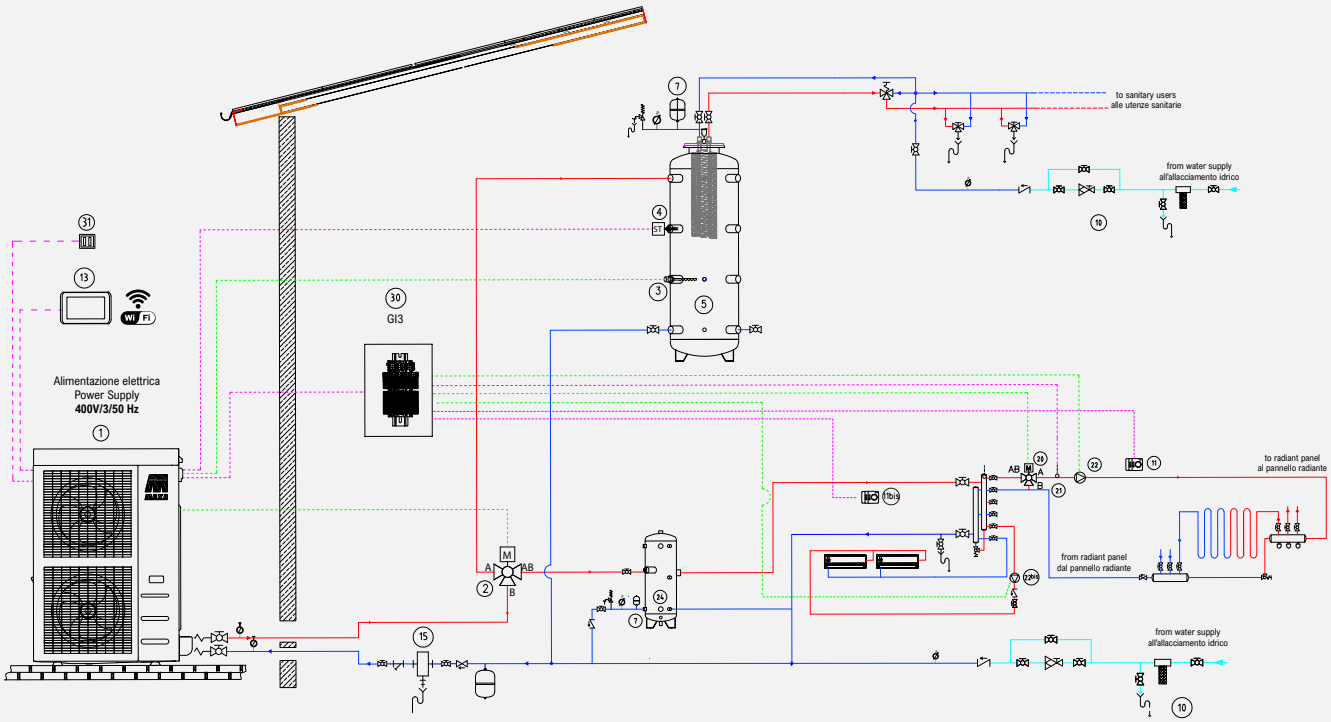


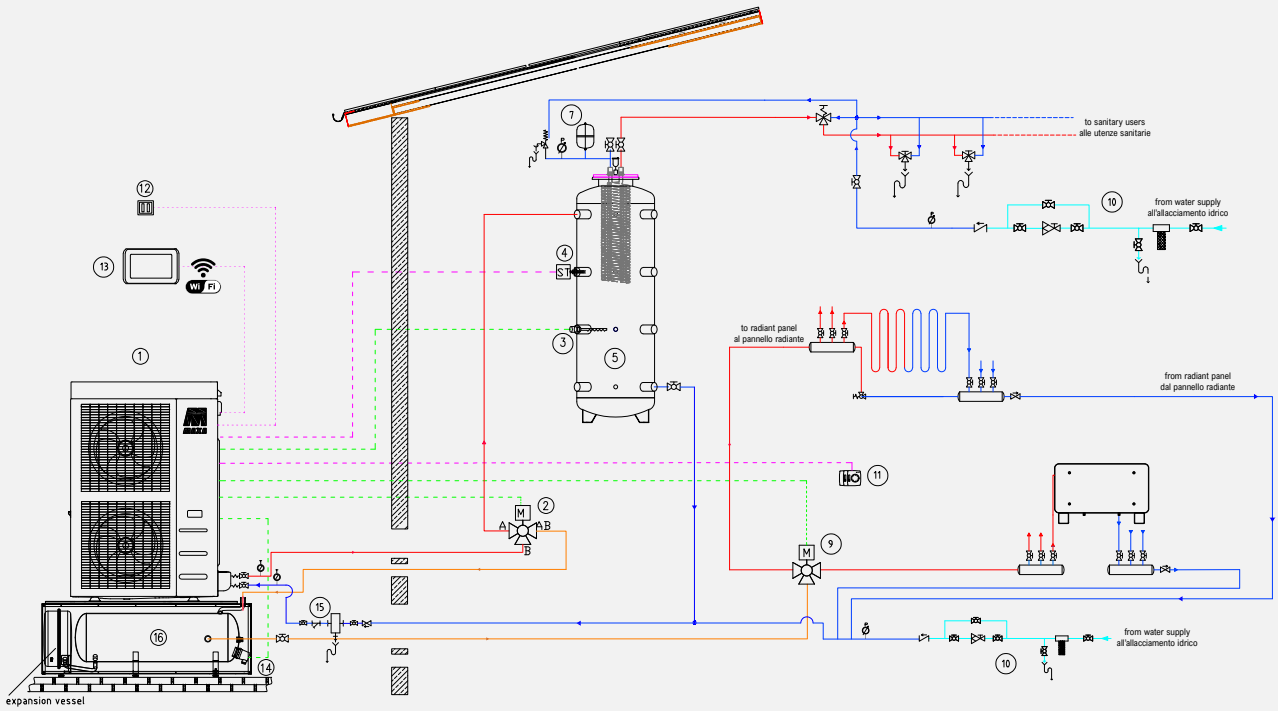


Purely indicative and non-binding diagram; for the construction of the system, it is necessary to refer to a design prepared by a qualified technician.

# Price list

| | | i-32V5 | i-32V5/KA | i-32V5 SL | i-32V5SL/KA |
|---|---|---|---|---|---|
| 06A | code | 0110419#203300001 | 0110419#203310001 | - | - |
| | € | 4.639 | 4.948 | - | - |
| 08A | code | 0110419#203400001 | 0110419#203410001 | 0110419#603400001 | 0110419#603410001 |
| | € | 4.966 | 5.275 | 6.654 | 7.052 |
| 10 | code | 0110419#201800001 | 0110419#201810001 | - | - |
| | € | 6.012 | 6.321 | - | - |
| 10T A | code | 0110419#214400001 | 0110419#214410001 | - | - |
| | € | 6.686 | 6.995 | - | - |
| 12 | code | 0110419#201900001 | 0110419#201910001 | 0110419#601900001 | 0110419#601910001 |
| | € | 6.273 | 6.583 | 8.248 | 8.646 |
| 12T A | code | 0110419#214500001 | 0110419#214510001 | 0110419#611900001 | 0110419#611910001 |
| | € | 6.947 | 7.256 | 9.070 | 9.468 |
| 14 | code | 0110419#202000001 | 0110419#202010001 | - | - |
| | € | 7.506 | 7.815 | - | - |
| 14T A | code | 0110419#214600001 | 0110419#214610001 | - | - |
| | € | 7.789 | 8.098 | - | - |
| 16 | code | 0110419#202100001 | 0110419#202110001 | 0110419#602100001 | 0110419#602110001 |
| | € | 7.971 | 8.280 | 10.826 | 11.262 |
| 16T A | code | 0110419#214700001 | 0110419#214710001 | 0110419#614700001 | 0110419#614710001 |
| | € | 8.040 | 8.349 | 10.756 | 11.156 |
| 18T A | code | 0110419#214800001 | 0110419#214810001 | - | - |
| | € | 8.585 | 8.894 | - | - |

| FACTORY-MOUNTED ACCESSORIES | | | |
|---|---|---|---|
| | | Compatibility | € |
| GI * | System management module | | 400 |
| TR2 | Cu/Al coil with Silver Line Cu anti-corrosion treatment for models | 06A, 08A, SL08A | 1.127 |
| TR2 | Cu/Al coil with Silver Line Cu anti-corrosion treatment for models | 10, 10T A, 12, SL12, 12T A, SL12T A | 1.942 |
| TR2 | Cu/Al coil with Silver Line Cu anti-corrosion treatment for models | 14, 14T A, 16, SL16, 16T A, SL16T A, 18T A | 2.104 |

| ACCESSORIES SUPPLIED SEPARATELY | | | | |
|---|---|---|---|---|
| | | Compatibility | Code | € |
| e-PRO *** | Wired Remote control, Wi-Fi connected | | 0100225#20010 | 463 |
| e-LITE *** | Multifunction touch screen wired control | | 011049#0101 | 463 |
| Hi-TV415 *** | Centralised multifunction touchscreen remote control | | 0103123#00001 | 659 |
| i-CR2 *** | Wall-mounted remote control | | | 319 |
| Connect Box ** | Heat pump communication gateway and MAXA CONNECT | | 011049#0103 | 318 |
| GI3 ** | Hardware expansion module | | 018210000#01 | 886 |
| AG | Anti-vibration support | | 015908#010045 | 175 |
| FD | Defangling filter for models | 06A, 08A, 10, 10T A, 12, 12T A | 0119100075 | 118 |
| FD | Defangling filter for models | 14, 14T A, 16, 16T A, 18T A | 0119100076 | 280 |
| FY | Y-strainer | | 017121#2401 | 92 |
| SAS | Remote system probe – DHW storage probe | | 0110321000001 | 48 |
| SPS | Solar panel sensor | | CH-CC-EN-ST-0015 | 104 |
| VDIS2 | Three-way diverting valve for domestic hot water production in a thermal storage tank | | 011049#0077 | 411 |
| VSA | Anti-freeze thermal discharge valve | | 0101125#32500010 | 402 |
| VRC | Condensate Drain Pan | 06A, 08A | 0102824#5020010 | 273 |
| | Condensate Drain Pan with rubber anti-vibration mounts | 06A, 08A | 0102824#5000010 | 383 |

For accessories of the DAS monitoring system (ISK, LNC, OVPN), see chapter "Connection devices for Maxa DAS supervision system"
* Accessory available for sizes 10-12-14-16, not compatible with version A
** Accessory available for sizes 06A, 08A, 10, 10T A, 12, 12T A, 14T A, 16T A, 18T A – not available for sizes 14, 16
*** Accessories not usable simultaneously

# i-32V5C Midi

## Air-cooled inverter monobloc R32 water chiller

21 kW÷32 kW

The chillers of the i-32V5C Midi range have been designed for residential and commercial applications.
The use of brushless inverter compressor technology, combined with the electronic expansion valve, the variable-speed circulator and fan, optimizes energy consumption and the operating efficiency of the refrigeration components.

MADE IN ITALY | R32 REFRIGERANT 675 GWP | WI-FI OPTIONAL | CASCADE MANAGEMENT FOR UP TO 7 UNITS | SILENCED VERSION | COIL ANTICORROSION TREATMENT | FULL INVERTER SYSTEM | VERSION BT | ACCESSORY DS

**DC inverter** twin-rotary hermetic compressor, specifically designed for operation with R32, equipped with thermal protection and mounted on rubber anti-vibration supports.

**Casing**: structure made of hot-dip galvanized steel sheet profiles and panels, polyester powder coated, RAL 7035 textured finish, weather-resistant.

**User Side Heat Exchanger:** brazed plate heat exchanger in AISI 304 stainless steel, coated with black flexible closed-cell elastomeric foam.

**Source Side Heat Exchanger:** the air heat exchangers are made entirely of aluminum using microchannel technology.

**Fans:** axial type with brushless DC motor, with airfoil-profile blades. They are statically and dynamically balanced.

**Refrigeration Circuit:**

- Filter drier;
- Shut-off valve on the liquid line;
- Liquid flow and moisture indicator;
- Electronic expansion valve
- Charge connections;
- High-pressure safety pressure switches
- High and low pressure transducers

**Standard Components**

- Electronic circulator
- EEV - electronic thermostatic valve
- Liquid indicator
- Water-side safety valve
- Drain valve
- Flow switch (flow presence signaling)
- Clean remote on/off contact
- Dynamic setpoint
- Three-phase relay for phase sequence/failure monitoring
- Fan speed controller (ECM fans)
- 2nd setpoint

**Electrical Panel and Control:** fully manufactured and wired in compliance with IEC 60335-2-40.

## Operating Areas

**Cold**

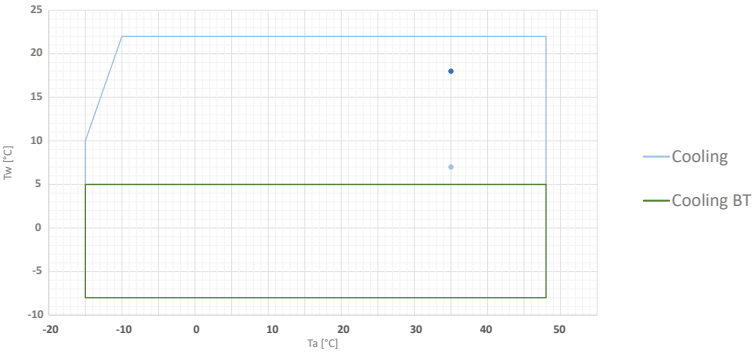


Tw: water temperature - Ta: outdoor air temperature

# Accessories

## Factory-installed

- **KA** – Anti-freeze kit (heat exchanger + base) – comprises a self-heating cable that is bonded to the base of the unit near the condenser coil, and a PET heating element positioned on the face of the plate heat exchanger.
- **TR1** - Microchannel coil with Aero surface treatment. The treatment consists in the application by spraying of a special water-based coating made of new resins with very high chemical resistance. The product is flexible to withstand thermal contractions and expansions, UV-resistant, dirt-repellent, mechanically resistant, with very limited heat transfer losses and practically no effects on air-side pressure drops. The treatment withstands 6000 h according to ASTM B117.
- **TR1C4** - Anti-corrosion treatment on coil and sheet metal – includes a TR1-type treatment on the coil and, in addition, the hot-dip galvanized steel panels are painted so as to make them suitable for unit installation in C4H environments, according to UNI EN 12944. The external fastening hardware is made of AISI 304 material, class A2.
- **GI -** System management module - allows the management of the following functions: management of the booster circulation pump with the aid of a room thermostat (not supplied); management of the mixing valve on the system side in both heating and cooling modes; management of solar-thermal integration.
- **CM** - BMS connectivity setup – ModBus protocol included – accessory that enables the connection of the unit to external controllers via serial cable with RS-485 electrical standard and ModBus RTU protocol.
- **RP** - Coil protective grilles – wire mesh to prevent foreign objects from entering the coil and to protect the coil from accidental contact with objects or people.
- **IM** - Circuit breakers on compressors - Overcurrent switches applied to compressors, protecting components from faults caused by possible current spikes.
- **DS** - The unit with desuperheater includes the addition of a brazed-plate heat exchanger made of AISI 316 stainless steel, factory-insulated, a variable-speed circulator, and a remote temperature sensor. The desuperheater allows partial recovery of the condensation heat.
- **SL** - thanks to the use of dedicated acoustic panels, it ensures low sound emissions.

## Provided separately

- **AG** - Anti-vibration kit – designed to prevent transmission of vibrations to the structure; must be installed under the unit, in the dedicated mounting holes.
- **VRC** - Condensate drip tray – galvanized sheet metal container to be installed at the base of the unit for collecting condensate water.
- **FY** - Y-strainer – contains a stainless steel mesh screen (500 µm filtration) that collects solid materials present in the water. Filtration prevents blockage and/or damage to the devices installed downstream of the strainer. Alternatively, it is possible to install a dirt separator that ensures a filtration level not greater than 1 mm (in this case, it is no longer necessary to install the Y-strainer).
- **FD** - Dirt separator – allows the heavier impurities present in the hydraulic circuit to be stopped and retained, as they are captured by a synthetic filter mesh and collected in a settling chamber. A magnetic device located inside the body of the dirt separator also makes it possible to trap ferromagnetic particles.
- **VDIS3** - Diverter valve – 3-way motorized ball valve Kvs 20.8, F 1" 1/4 connections, complete with actuator.
- **ACT** - Technical storage tank (see dedicated section).
- **VSA** - Anti-freeze thermal discharge valve – a valve capable of opening at 0°C to prevent ice formation inside the pipes.
- **ISK**** - USB/RS485 serial converter – interface device capable of reading and writing control registers via the RS485 standard and converting them to a USB port that can be connected to any supervision system.
- **LNC**** - LAN-Wi-Fi router – device that allows the unit to be connected to a local network via Ethernet cable or Wi-Fi coverage for remote monitoring.
- **OVPN**** - 4G LAN-Wi-Fi router with VPN tunnelling – a device that allows you to connect the unit remotely to an industrial router using the secure OPENVPN service.
- **i-CR2**** - Wall-mounted remote control – Modbus remote controller with negative LCD and capacitive keys. The device is intended to be used as a remote unit keypad with local temperature sensing and replicates the functions of the on-board unit controller.
- **e-LITE**** - Color touch-screen wired controller, which can be used as a remote keypad for the heat pump, as it replicates the functions of the on-board unit display. It is equipped with local temperature sensing and time scheduling.
- **Hi-TV415**** - Color touchscreen wired remote controller for centralized management of a chiller/heat pump cascade, for up to 7 units.
- **Connect Box**** - Wi-Fi communication gateway for the Maxa Connect App.

** Accessories not usable simultaneously

## Versions

- i-32V5C Midi - Chiller standard version
- i-32V5C-BT Midi - The BT version of the unit allows the operating range of the water temperature to be extended down to -8°C. In this case it is necessary to use a mixture of water and glycol.

**e-LITE**
Multifunction remote controller
ACCESSORY

**Hi-TV415**
Touch screen remote controller for cascade management (max 7 units)
ACCESSORY

| | | | 0121 | 0126 | 0128 | 0132 |
|---|---|---|---|---|---|---|
| **Cooling** | Cooling capacity (1) | kW | 20,7 | 25,8 | 28,1 | 31,8 |
| | Power input (1) | kW | 5,92 | 8,03 | 8,29 | 10,2 |
| | E.E.R. (1) | W/W | 3,50 | 3,21 | 3,39 | 3,13 |
| | Cooling capacity (2) | kW | 21,6 | 25,5 | 28,4 | 32,8 |
| | Power input (2) | kW | 4,30 | 5,28 | 5,77 | 7,09 |
| | E.E.R. (2) | W/W | 5,02 | 4,83 | 4,92 | 4,63 |
| | SEER (3) | W/W | 5,19 | 5,07 | 5,43 | 5,06 |
| | IPLV (4) | | 5,56 | 5,55 | 5,73 | 5,54 |
| | Cooling capacity (8) | kW | 10,7 | 13,8 | 14,9 | 17,2 |
| | Power input (8) | kW | 6,05 | 7,66 | 7,92 | 9,47 |
| | E.E.R. (8) | W/W | 1,77 | 1,80 | 1,88 | 1,82 |
| | Water flow rate (1) | L/s | 0,99 | 1,23 | 1,34 | 1,52 |
| | Pressure drops in the heat exchanger on the user side (1) | kPa | 37,5 | 53,1 | 39,2 | 47,8 |
| **Compressor** | Type | | Twin Rotary DC Inverter | | | |
| | Number of compressors | | 1 | 1 | 1 | 1 |
| | Refrigerant oil (type) | | FW68S or equivalent | | | |
| | Refrigerant oil (quantity) | L | 1,5 | 1,5 | 1,5 | 1,5 |
| | Refrigerant circuits | | 1 | 1 | 1 | 1 |
| **Refrigerant** | Type | | R32 | R32 | R32 | R32 |
| | Refrigerant quantity (5) | kg | 1,8 | 1,8 | 2,2 | 2,2 |
| | Refrigerant quantity in tons of $CO_2$ equivalent (5) | Ton | 1,22 | 1,22 | 1,49 | 1,49 |
| | Design pressure (high/low) chiller model | bar | 42,8/3,5 | 42,8/3,5 | 42,8/3,5 | 42,8/3,5 |
| **Outdoor zone fans** | Type | | Brushless DC Motor | | | |
| | Number | | 1 | 1 | 1 | 1 |
| | Rated power (1) | kW | 0,27 | 0,31 | 0,70 | 0,73 |
| | Maximum absorbed power | kW | 0,83 | 0,83 | 0,83 | 0,83 |
| | Maximum absorbed current | A | 1,45 | 1,45 | 1,45 | 1,45 |
| | Nominal air flow rate | m³/h | 8091 | 8407 | 12873 | 12836 |
| **Internal heat exchanger** | Internal heat exchanger type | | Plate type | | | |
| | No. of indoor heat exchangers | | 1 | 1 | 1 | 1 |
| | Water content | L | 1,7 | 1,7 | 2,1 | 2,1 |
| **Hydraulic circuit** | Available head (1) | kPa | 79,1 | 55,8 | 66,3 | 50,2 |
| | Water content of the hydronic circuit | L | 2,4 | 2,4 | 3,4 | 3,4 |
| | Maximum pressure of hydronic kit (safety valve setting) | bar | 6 | 6 | 6 | 6 |
| | Hydraulic connections | inch | 1"M | 1"M | 1"1/4 M | 1"1/4 M |
| | Minimum water volume (6) | L | 110 | 110 | 110 | 110 |
| | Maximum circulator power | kW | 0,31 | 0,31 | 0,31 | 0,31 |
| | Maximum absorbed current of circulator | A | 1,37 | 1,37 | 1,37 | 1,37 |
| | Energy Efficiency Index (EEI) circulator | | ≤ 0,23 | ≤ 0,23 | ≤ 0,23 | ≤ 0,23 |
| **Sound emissions** | Sound power level Lw (7) std/SL | dB(A) | 73 / 69 | 74 / 70 | 75 / 71 | 76 / 72 |
| **Electrical data** | Power supply | | 400V/3P+N+PE/50Hz | | | |
| | Maximum absorbed power | kW | 9,88 | 10,3 | 11,1 | 11,7 |
| | Maximum absorbed current | A | 19,0 | 19,7 | 20,9 | 21,9 |
| | Maximum power input with antifreeze kit | kW | 9,95 | 10,4 | 11,1 | 11,8 |
| | Maximum current draw with antifreeze kit | A | 19,0 | 19,7 | 20,9 | 21,9 |

(1) Cooling: outdoor air temperature 35°C; inlet/outlet water temperature 12/7°C.
(2) Cooling: outdoor air temperature 35°C; inlet/outlet water temperature 23/18°C.
(3) Cooling: low temperature, variable output, constant flow rate.
(4) Calculated according to AHRI 551/591 (SI) standard.
(5) Indicative data subject to change. For the correct data, always refer to the technical nameplate on the unit.
(6) Calculated for a decrease in the system water temperature of 10°C with a defrost cycle lasting 6 minutes.
Minimum required volume in the primary circuit.
(7) Sound power: condition (3); value determined on the basis of measurements carried out in accordance with UNI EN ISO 9614-1, in compliance with the requirements of Eurovent certification.
(8) Cooling BT version: outdoor air temperature 35°C; inlet/outlet water temperature -3/-8°C. Fluid treated with 35% ethylene glycol
The stated performance data are indicative and may be subject to change. Furthermore, the capacities declared at points (1), (2), (8) refer to the instantaneous power in accordance with UNI EN 14511. The value declared at point (3) is determined in accordance with UNI EN 14825.

# Dimensional Drawings

## i-32V5C Midi 0121 / 0126 / 0128 / 0132

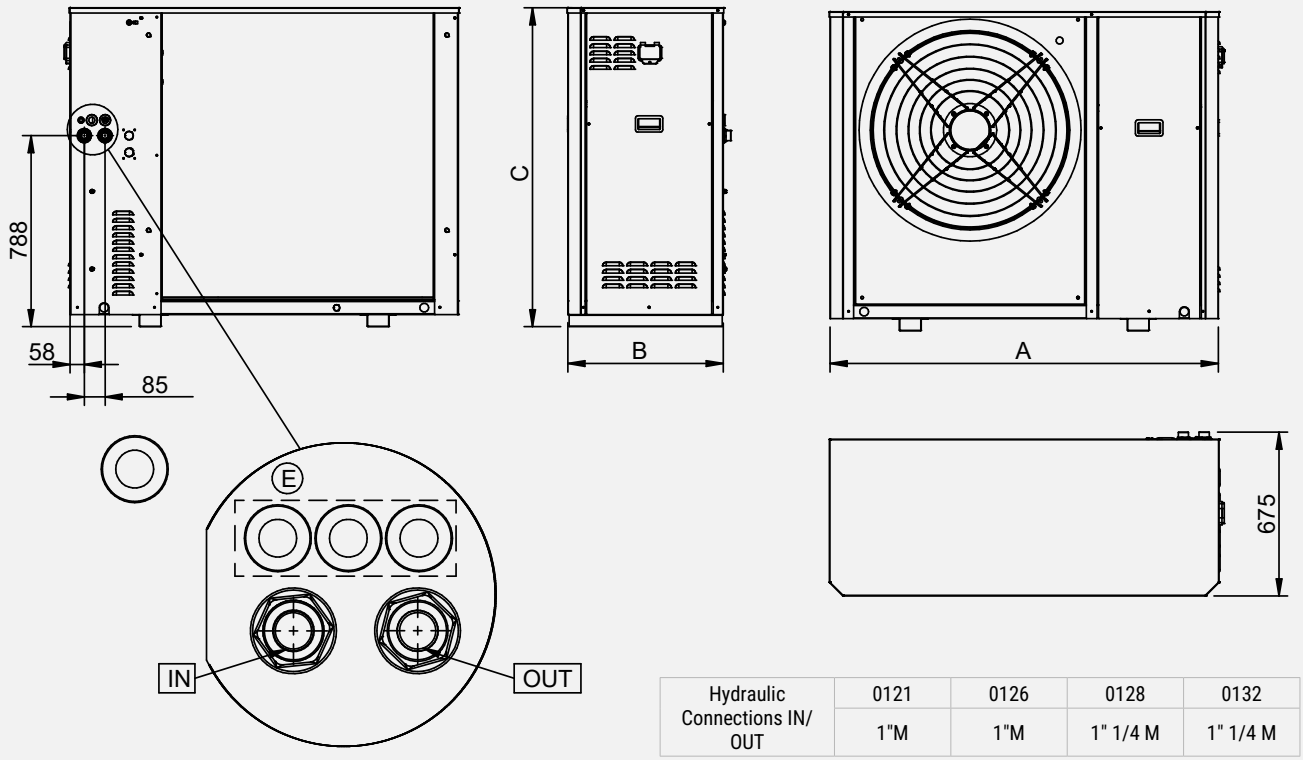


| Hydraulic Connections IN/ OUT | 0121 | 0126 | 0128 | 0132 |
|---|---|---|---|---|
| | 1"M | 1"M | 1" 1/4 M | 1" 1/4 M |

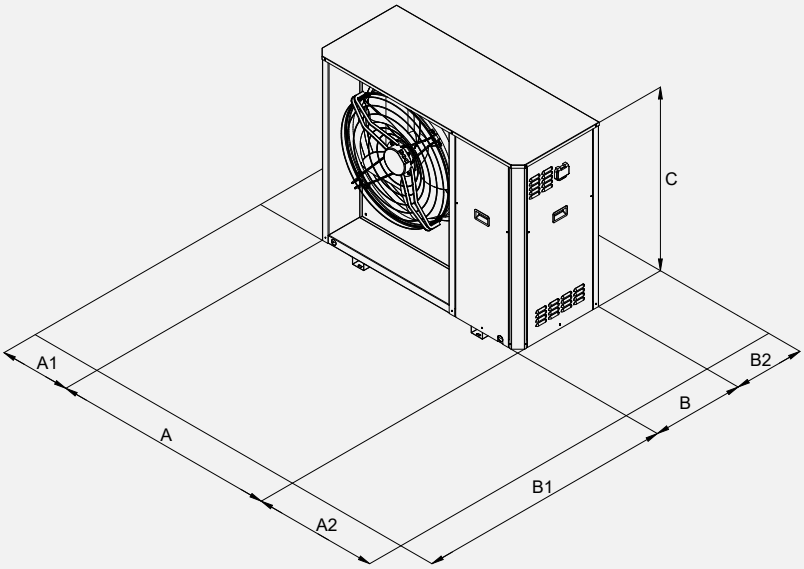


| Clearances | | A1 | A2 | B1 | B2 |
|---|---|---|---|---|---|
| 0121 | mm | 400 | 500 | 1500 | 400 |
| 0126 | mm | 400 | 500 | 1500 | 400 |
| 0128 | mm | 400 | 500 | 1500 | 400 |
| 0132 | mm | 400 | 500 | 1500 | 400 |

| | | 0121 | 0126 | 0128 | 0132 |
|---|---|---|---|---|---|
| L | mm | 1600 | 1600 | 1600 | 1600 |
| P | mm | 680 | 680 | 680 | 680 |
| H | mm | 1315 | 1315 | 1315 | 1315 |
| Shipping weight | kg | 215 | 215 | 225 | 225 |

Dimensions in mm

# Price list

| i-32V5C Midi | | | 0121 | 0126 | 0128 | 0132 |
|---|---|---|---|---|---|---|
| i-32V5C Midi | Monobloc inverter chillers | € | 13.499 | 14.366 | 15.357 | 15.853 |
| i-32V5C Midi/BT | Monobloc inverter chillers for low-temperature operation | € | 14.106 | 14.971 | 15.962 | 16.458 |

| FACTORY-MOUNTED ACCESSORIES | | | | | | |
|---|---|---|---|---|---|---|
| CM | Serial communication module for Modbus | code | 011049#0076 | | | |
| | | € | 837 | | | |
| DS (1) | Partial recovery (only with GI module) desuperheater with integrated electronic pump | € | 1.725 | | 1.917 | |
| DSFR | Phase sequence and phase loss monitoring device + undervoltage and overvoltage relay | € | Standard | | | |
| GI | System management module | € | 484 | | | |
| IM | Magnetothermal circuit breakers | € | 289 | | | |
| KA | Anti-freeze kit (heat exchanger + base) | € | 198 | | | |
| RP | Battery protection nets | € | 511 | | | |
| SL | Silenced version | € | 713 | | | |
| TR1 | Microchannel coil with Aero surface treatment | € | 1.790 | | 2.046 | |
| TR1C4 | Cu/Al coil and sheet metal with anti-corrosion treatment | € | 4.060 | 4.485 | 4.740 | |
| **ACCESSORIES SUPPLIED SEPARATELY** | | | | | | |
| e-LITE* | Multifunction touch screen wired control | code | 011049#0101 | | | |
| | | € | 463 | | | |
| Hi-TV415* | Centralised multifunction touchscreen remote control | code | 0103123#00001 | | | |
| | | € | 659 | | | |
| Connect Box* | Heat pump communication gateway and MAXA CONNECT | code | 011049#0103 | | | |
| | | € | 318 | | | |
| i-CR2* | Wall-mounted remote control | € | 319 | | | |
| AG | Anti-vibration support | code | 015908#010050 | | | |
| | | € | 240 | | | |
| FD | Dirt separator filter | code | 0119100081 | | | |
| | | € | 424 | | | |
| FY | Y-strainer | code | 017121#2401 | 017121#2501 | 017121#2601 | 017121# 2701 |
| | | € | 92 | 92 | 92 | 92 |
| SAS | Remote system probe – DHW storage probe | code | 0110321000001 | | | |
| | | € | 48 | | | |
| VDIS3 | Three-way diverting valve for domestic hot water production in a thermal storage tank | code | 011049#0102 | | | |
| | | € | 449 | | | |

(1) GI already included
For accessories of the DAS monitoring system (ISK, LNC, OVPN), see chapter "Connection devices for Maxa DAS supervision system"
* Accessories that cannot be used simultaneously

# i-32V5H Midi

## Reversible air-to-water inverter monobloc heat pumps with R32

21 kW÷32 kW

The heat pumps in the i-32V5H Midi range have been designed for residential and commercial applications; they are extremely versatile and suitable for operation in heat pump mode with hot water production for space heating and domestic hot water use at a temperature of 60°C. The use of brushless inverter compressor technology, combined with the electronic expansion valve, the variable-speed circulator and fan, optimizes energy consumption and the operating efficiency of the refrigeration components.

| MADE IN ITALY | R32 | 60°C | A++ | WI-FI OPTIONAL | CASCADE MANAGEMENT FOR UP TO 7 UNITS | SILENCED VERSION | VERSION BT | FULL INVERTER SYSTEM |
|---|---|---|---|---|---|---|---|---|
| | REFRIGERANT 675 GWP | OUTLET WATER Supply Temperature | ENERGY EFFICIENCY CLASS | | | | | |

**DC inverter** twin-rotary hermetic compressor, specifically designed for operation with R32, equipped with thermal protection and mounted on rubber anti-vibration supports.

**Cabinet**: Suitable outdoor installation structure made of thick hot-dip galvanized steel sheet profiles, polyester powder coated, RAL 7035 textured finish, weather resistant.

**User Side Heat Exchanger**: brazed-plate heat exchanger in AISI 304 stainless steel, insulated with black flexible closed-cell elastomeric foam.

**Source Side Heat Exchanger**: the air exchangers are made of copper tubes and aluminum fins.

**Electrical Panel and Control**: fully manufactured and wired in compliance with IEC 60335-2-40.

**Fans**: axial type with airfoil blades. They are statically and dynamically balanced and supplied complete with protection grille and inlet/outlet air nozzle with double flared profile, specially shaped to increase efficiency and reduce noise. The electric motor used is modulated with a directly coupled EC brushless motor and equipped with integrated thermal protection.

The motor has an IP 54 protection rating according to CEI EN 60529.

### Standard Components

- Electronic circulator
- EEV - electronic thermostatic valve
- Liquid indicator
- Water-side safety valve
- Drain valve
- Flow switch (flow presence signaling)
- Clean remote on/off contact
- Dynamic setpoint
- Three-phase relay for phase sequence/failure monitoring
- Fan speed controller (ECM fans)
- 2nd setpoint

## Operating Areas

**Hot**

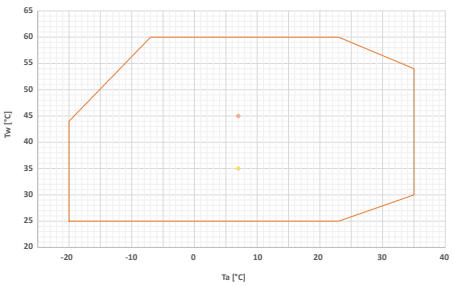


**Cold**

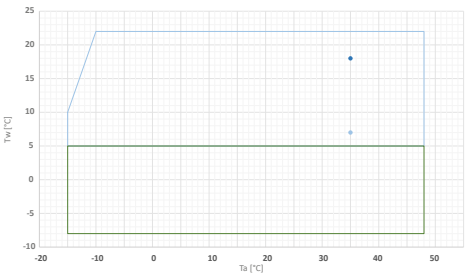


**DHW**

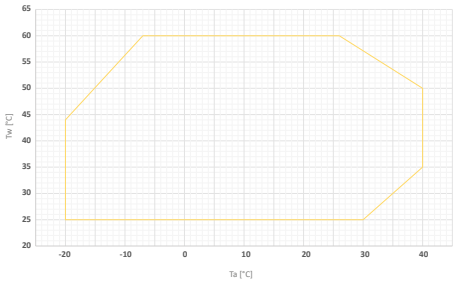


Cooling — Cooling BT

Tw: water temperature - Ta: outdoor air temperature

### Versions

- i-32V5H Midi - Reversible heat pump standard version
- i-32V5H-BT Midi - Reversible heat pump BT version (for low water temperatures)

# Accessories

## Factory-installed

- **KA** – Anti-freeze kit (heat exchanger + base) – comprises a self-heating cable that is bonded to the base of the unit near the condenser coil, and a PET heating element positioned on the face of the plate heat exchanger.
- **TR2** - Anti-corrosion treatment for coils – thanks to the treatment, the coil becomes flexible to withstand thermal expansion and contraction, mechanically resistant, protected against UV rays and dirt-repellent. Heat transfer losses are very limited. The treatment ensures coil protection in virtually all environmental conditions: from coastal to rural areas, from industrial to urban zones. The treatment withstands 6000 h according to ASTM B117.
- **TR2C4** - Anti-corrosion treatment on coil and sheet metal – includes a TR2-type treatment on the coil and, in addition, the hot-dip galvanized steel panels are painted so as to make them suitable for unit installation in C4H environments, in accordance with UNI EN 12944. The external fastening hardware is made of AISI 304 material, class A2. The treatment also includes the fan protection grille, while the galvanized sheets inside the unit (electrical panel casing and inductances) are excluded.
- **GI -** System management module - allows the management of the following functions: management of the booster circulation pump with the aid of a room thermostat (not supplied); management of the mixing valve on the system side in both heating and cooling modes; management of solar-thermal integration.
- **CM** - BMS connectivity setup – ModBus protocol included – accessory that enables the connection of the unit to external controllers via serial cable with RS-485 electrical standard and ModBus RTU protocol.
- **RP** - Coil protective grilles – wire mesh to prevent foreign objects from entering the coil and to protect the coil from accidental contact with objects or people.
- **IM** - Circuit breakers on compressors - Overcurrent switches applied to compressors, protecting components from faults caused by possible current spikes.
- **DS** - The unit with desuperheater includes the addition of a brazed-plate heat exchanger made of AISI 316 stainless steel, factory-insulated, a variable-speed circulator, and a remote temperature sensor. The desuperheater allows partial recovery of the condensation heat.
- **SL** - thanks to the use of dedicated acoustic panels, it ensures low sound emissions.

## Provided separately

- **SAS** - Domestic hot water probe / Remote system probe – in some system configurations (e.g. heat pump in parallel with the boiler on the same hydronic circuit and diverter valve for boiler exclusion), it may be necessary to enable a system temperature probe so that the unit controller can correctly manage the operation. The remote system probe controls the heat pump temperature only during the compressor start-up phase; shutdown is managed by the probe located on the heat pump flow line.
- **SPS** - Solar panel probe for GI3 – probe required to measure the temperature of the solar panels when the unit is integrated with a solar thermal system.
- **AG** - Anti-vibration kit – designed to prevent transmission of vibrations to the structure; must be installed under the unit, in the dedicated mounting holes.
- **VRC** - Condensate drip tray – galvanized sheet metal container to be installed at the base of the unit for collecting condensate water.
- **FY** - Y-strainer – contains a stainless steel mesh screen (500 µm filtration) that collects solid materials present in the water. Filtration prevents blockage and/or damage to the devices installed downstream of the strainer. Alternatively, it is possible to install a dirt separator that ensures a filtration level not greater than 1 mm (in this case, it is no longer necessary to install the Y-strainer).
- **FD** - Dirt separator – allows the heavier impurities present in the hydraulic circuit to be stopped and retained, as they are captured by a synthetic filter mesh and collected in a settling chamber. A magnetic device located inside the body of the dirt separator also makes it possible to trap ferromagnetic particles.
- **VDIS3** - Diverter valve – 3-way motorized ball valve Kvs 20.8, F 1" 1/4 connections, complete with actuator.
- **ACT** - Technical storage tank (see dedicated section).
- **VSA** - Anti-freeze thermal discharge valve – a valve capable of opening at 0°C to prevent ice formation inside the pipes.
- **ISK**** - USB/RS485 serial converter – interface device capable of reading and writing control registers via the RS485 standard and converting them to a USB port that can be connected to any supervision system.
- **LNC**** - LAN-Wi-Fi router – device that allows the unit to be connected to a local network via Ethernet cable or Wi-Fi coverage for remote monitoring.
- **OVPN**** - 4G LAN-Wi-Fi router with VPN tunnelling – a device that allows you to connect the unit remotely to an industrial router using the secure OPENVPN service.
- **i-CR2**** - Wall-mounted remote control – Modbus remote controller with negative LCD and capacitive keys. The device is intended to be used as a remote unit keypad with local temperature sensing and replicates the functions of the on-board unit controller.
- **e-LITE**** - Color touch-screen wired controller, which can be used as a remote keypad for the heat pump, as it replicates the functions of the on-board unit display. It is equipped with local temperature sensing and time scheduling.
- **e-Pro**** - Color touch-screen Wi-Fi wired controller that allows both local and remote control via the MyMaxa app.
- **Hi-TV415**** - Color touchscreen wired remote controller for centralized management of a chiller/heat pump cascade, for up to 7 units.
- **Connect Box**** - Wi-Fi communication gateway for the Maxa Connect App.

** Accessories not usable simultaneously

| | | | 0121 | 0126 | 0128 | 0132 |
|---|---|---|---|---|---|---|
| **Cooling** | Cooling capacity (1) | kW | 17,7 | 18,7 | 24,2 | 26,0 |
| | Power input (1) | kW | 5,87 | 6,19 | 7,98 | 8,65 |
| | E.E.R. (1) | W/W | 3,02 | 3,02 | 3,03 | 3,01 |
| | Cooling capacity (2) | kW | 22,0 | 25,8 | 29,0 | 31,4 |
| | Power input (2) | kW | 4,44 | 5,50 | 6,36 | 7,08 |
| | E.E.R. (2) | W/W | 4,95 | 4,68 | 4,56 | 4,44 |
| | SEER (5) | W/W | 4,44 | 4,55 | 4,76 | 4,81 |
| | Cooling capacity (10) | kW | 9,21 | 9,83 | 13,0 | 14,0 |
| | Power input (10) | kW | 5,94 | 6,14 | 7,77 | 8,33 |
| | E.E.R. (10) | W/W | 1,55 | 1,60 | 1,67 | 1,68 |
| | Water flow rate (1) | L/s | 0,8 | 0,9 | 1,2 | 1,2 |
| | Pressure drops in the heat exchanger on the user side (1) | kPa | 32,5 | 34,5 | 31,2 | 34,2 |
| **Heating** | Heating capacity (3) | kW | 21,3 | 26,0 | 28,0 | 32,1 |
| | Input power (3) | kW | 4,92 | 6,44 | 6,35 | 7,84 |
| | C.O.P. (3) | W/W | 4,33 | 4,04 | 4,41 | 4,09 |
| | Heating capacity (4) min/nom/max | kW | 21,2 | 25,8 | 28,3 | 32,7 |
| | Power input (4) | kW | 6,36 | 7,86 | 8,21 | 9,90 |
| | C.O.P. (4) | W/W | 3,34 | 3,28 | 3,45 | 3,30 |
| | SCOP (6) | W/W | 4,20 | 4,05 | 4,29 | 4,02 |
| | Water flow rate (4) | L/s | 1,0 | 1,2 | 1,4 | 1,6 |
| | Pressure drops in the heat exchanger on the user side (4) | kPa | 37,9 | 53,1 | 41,4 | 50,6 |
| | Energy efficiency water 35°C / 55°C | Class | A++/A++ | A++/A++ | A++/A++ | A++/A++ |
| **Compressor** | Type | | Twin Rotary DC Inverter | | | |
| | Number of compressors | | 1 | 1 | 1 | 1 |
| | Refrigerant oil (type) | | FW68S or equivalent | | | |
| | Refrigerant oil (quantity) | L | 1,5 | 1,5 | 1,5 | 1,5 |
| | Refrigerant circuits | | 1 | 1 | 1 | 1 |
| **Refrigerant** | Type | | R32 | R32 | R32 | R32 |
| | Refrigerant quantity (7) | kg | 4,3 | 4,3 | 5,1 | 5,1 |
| | Refrigerant quantity in tons of $CO_2$ equivalent (7) | Ton | 2,90 | 2,90 | 3,44 | 3,44 |
| | Design pressure (high/low) heat pump model | bar | 42,8/1,3 | 42,8/1,3 | 42,8/1,3 | 42,8/1,3 |
| | Design pressure (high/low) chiller model | bar | 42,8/3,5 | 42,8/3,5 | 42,8/3,5 | 42,8/3,5 |
| **Outdoor zone fans** | Type | | Brushless DC Motor | | | |
| | Number | | 1 | 1 | 1 | 1 |
| | Rated power (1) | kW | 0,26 | 0,26 | 0,50 | 0,62 |
| | Maximum absorbed power | kW | 0,83 | 0,83 | 0,83 | 0,83 |
| | Maximum absorbed current | A | 1,45 | 1,45 | 1,45 | 1,45 |
| | Nominal air flow rate (1) | m³/h | 10769 | 10847 | 12209 | 13202 |
| **Internal heat exchanger** | Internal heat exchanger type | | Plate type | | | |
| | No. of indoor heat exchangers | | 1 | 1 | 1 | 1 |
| | Water content | L | 1,7 | 1,7 | 2,1 | 2,1 |
| **Hydraulic circuit** | Available head (1) | kPa | 90,0 | 86,5 | 81,4 | 74,7 |
| | Water content of the hydronic circuit | L | 2,4 | 2,4 | 3,4 | 3,4 |
| | Maximum pressure of hydronic kit (safety valve setting) | bar | 6 | 6 | 6 | 6 |
| | Hydraulic connections | inch | 1"M | 1"M | 1"1/4 M | 1"1/4 M |
| | Minimum water volume (8) | L | 110 | 110 | 110 | 110 |
| | Maximum circulator power | kW | 0,31 | 0,31 | 0,31 | 0,31 |
| | Maximum absorbed current of circulator | A | 1,37 | 1,37 | 1,37 | 1,37 |
| | Energy Efficiency Index (EEI) circulator | | ≤ 0,23 | ≤ 0,23 | ≤ 0,23 | ≤ 0,23 |
| **Sound emissions** | Sound power level Lw (9) standard / SL | dB(A) | 72 / 68 | 74 / 70 | 75 / 71 | 76 / 72 |
| | Sound power level Lw (11) standard / SL | dB(A) | 65 / 63 | 65 / 63 | 67 / 65 | 67 / 65 |
| **Electrical data** | Power supply | | 400V/3P+N+T/50Hz | | | |
| | Maximum absorbed power | kW | 12,3 | 12,3 | 14,7 | 14,7 |
| | Maximum absorbed current | A | 22,9 | 22,9 | 26,8 | 26,8 |
| | Maximum power input with antifreeze kit | kW | 12,5 | 12,5 | 14,8 | 14,8 |
| | Maximum current draw with antifreeze kit | A | 23,3 | 23,3 | 27,1 | 27,1 |

(1) Cooling: outdoor air temperature 35°C; inlet/outlet water temperature 12/7°C.
(2) Cooling: outdoor air temperature 35°C; water inlet/outlet temperature 23/18°C.
(3) Heating: outdoor air temperature 7°C d.b. 6°C w.b.; water inlet/outlet temp. 30/35°C.
(4) Heating: outdoor air temperature 7°C d.b. 6°C w.b.; water inlet/outlet temp. 40/45°C.
(5) Cooling: low temperature, variable output, constant flow rate.
(6) Heating: average climatic conditions; Tbiv = -7°C; low temperature, variable output, constant flow rate.
(7) Indicative data subject to change. For the correct data, always refer to the technical nameplate on the unit.
(8) Calculated for a 10°C decrease in the system water temperature with a defrost cycle lasting 6 minutes.
Minimum required volume in the primary circuit.
(9) Sound power: heating mode condition (3) according to EN 12102-1:2013; value determined on the basis of measurements carried out in accordance with standard UNI EN ISO 9614-1.
(10) Cooling BT version: outdoor air temperature 35°C; inlet/outlet water temperature -3/-8°C. Fluid treated with 35% ethylene glycol
(11) Sound power: heating mode at partial load in accordance with Annex A of EN 12102:2017; value determined on the basis of measurements carried out in accordance with UNI EN ISO 9614-1, in compliance with the requirements of the Eurovent and Heat Pump Keymark certifications.
N.B. The performance data shown are indicative and may be subject to change. Furthermore, the capacities stated at points (1), (2), (3) and (4) are to be understood as referring to the instantaneous power according to UNI EN 14511. The data stated at points (5) and (6) are determined in accordance with UNI EN 14825.

# Dimensional Drawings

## i-32V5 H Midi 0121 / 0126 / 0128 / 0132

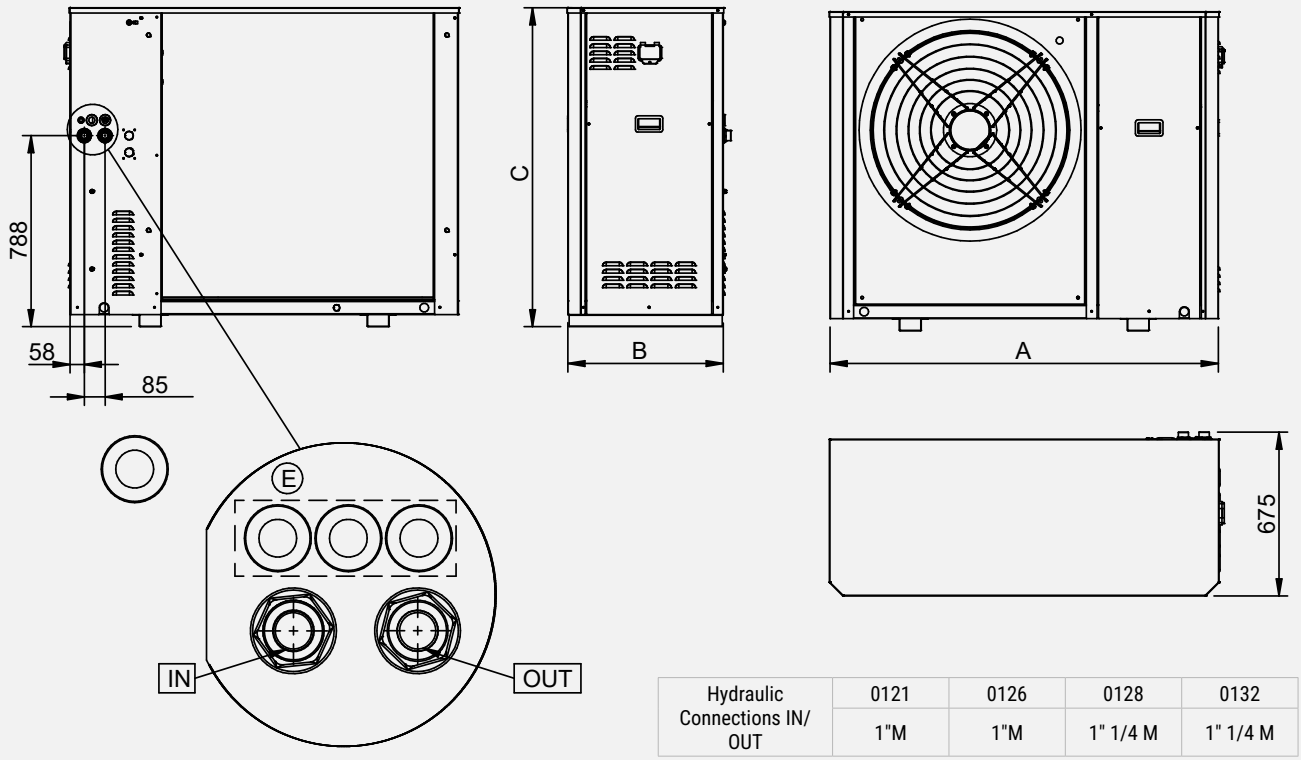


| Hydraulic Connections IN/ OUT | 0121 | 0126 | 0128 | 0132 |
|---|---|---|---|---|
| | 1"M | 1"M | 1" 1/4 M | 1" 1/4 M |

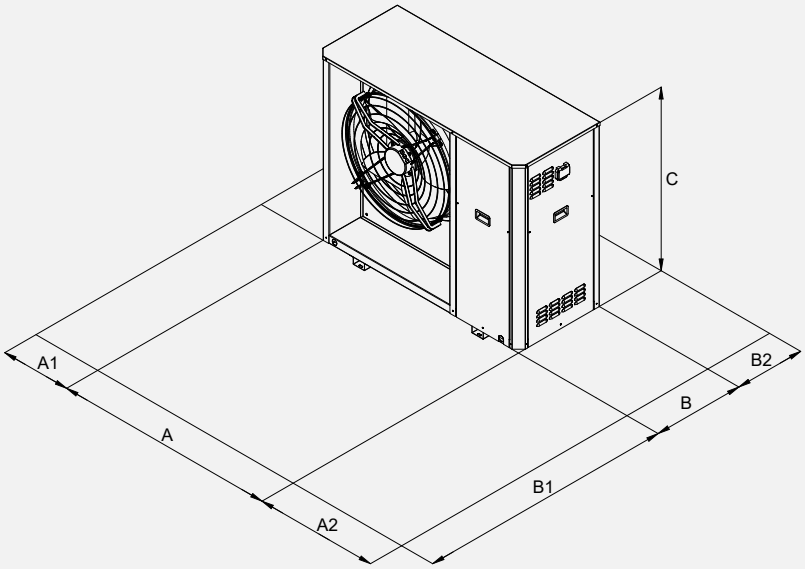


| Clearances | | A1 | A2 | B1 | B2 |
|---|---|---|---|---|---|
| 0121 | mm | 400 | 500 | 1500 | 400 |
| 0126 | mm | 400 | 500 | 1500 | 400 |
| 0128 | mm | 400 | 500 | 1500 | 400 |
| 0132 | mm | 400 | 500 | 1500 | 400 |

| | | 0121 | 0126 | 0128 | 0132 |
|---|---|---|---|---|---|
| L | mm | 1600 | 1600 | 1600 | 1600 |
| P | mm | 680 | 680 | 680 | 680 |
| H | mm | 1315 | 1315 | 1315 | 1315 |
| Shipping weight | kg | 250 | 250 | 265 | 265 |

Dimensions in mm

# System Diagram - Standard Application

| | | | | | | | |
|---|---|---|---|---|---|---|---|
| 1 | i-32V5 Midi heat pump | 5 | DHW storage tank | 12 | Hi-TV415 Control | 24 | Technical water tank (Puffroller) |
| 2 | 3-way DHW/system valve (VDIS) | 6 | Fast DHW heater | 13 | e-Pro control | 32 | Desuperheater (DS) |
| 3 | DHW electric heater | 7 | Expansion vessel | 15 | Y-strainer / Dirt separator filter (FD) | | |
| 4 | DHW temperature sensor (SAS) | 10 | Water connection | | | | |

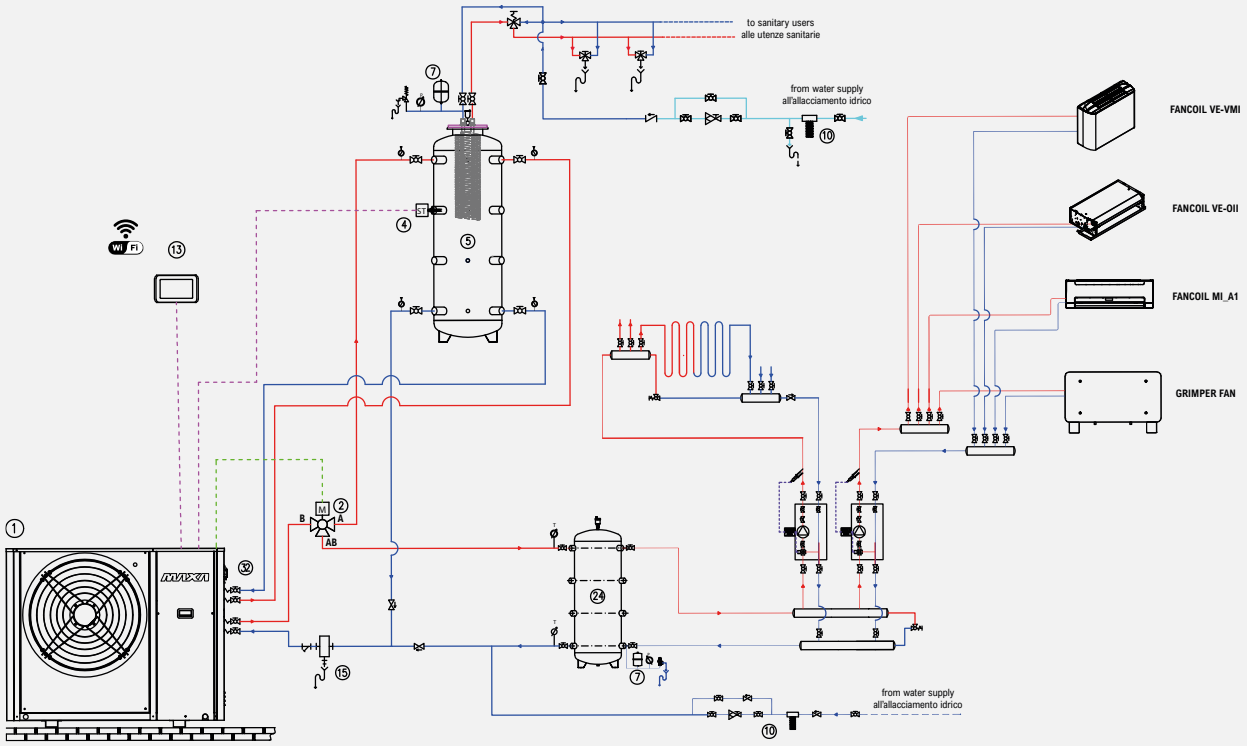


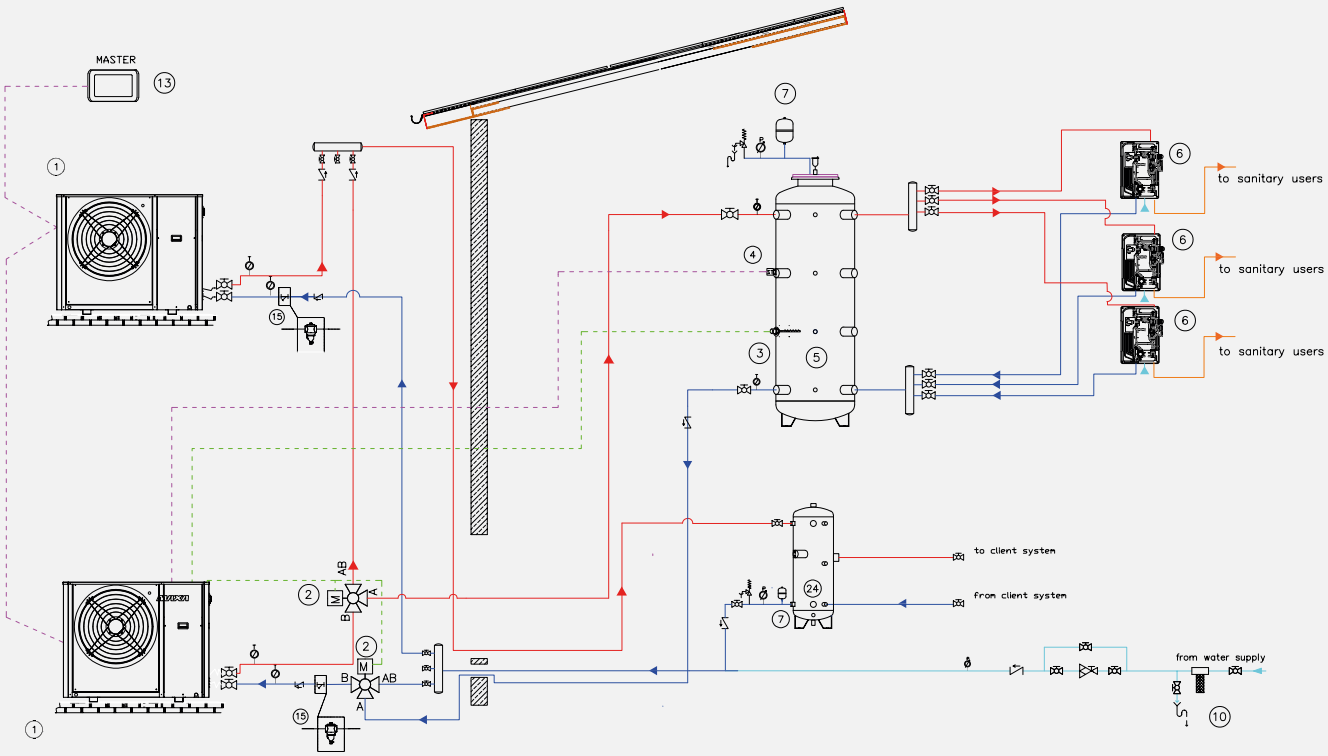


Purely indicative and non-binding diagram; for the construction of the system, it is necessary to refer to a design prepared by a qualified technician.

# Price list

| i-32V5H Midi | | | 0121 | 0126 | 0128 | 0132 |
|---|---|---|---|---|---|---|
| i-32V5H Midi | Reversible inverter monobloc heat pump | € | 15.295 | 15.649 | 16.707 | 17.178 |
| i-32V5H Midi/BT | Reversible inverter monobloc heat pump for low-temperature operation | € | 16.708 | 17.077 | 18.193 | 18.688 |

| FACTORY-MOUNTED ACCESSORIES | | | | | | |
|---|---|---|---|---|---|---|
| CM | Serial communication module for Modbus | code | 011049#0076 | | | |
| | | € | 837 | | | |
| DS (1) | Partial recovery (only with GI module) desuperheater with integrated electronic pump | € | 1.725 | | 1.917 | |
| DSFR | Phase sequence and phase loss monitoring device + undervoltage and overvoltage relay | € | Standard | | | |
| GI | System management module | € | 484 | | | |
| IM | Main miniature circuit breaker | € | 289 | | | |
| KA | Heat exchanger resistance + base | € | 198 | | | |
| RP | Battery protection nets | code | 013121#2401 | 013121#2501 | 013121#2601 | 013121#2701 |
| | | € | 511 | | | |
| SL | Silenced version | € | 713 | | | |
| TR2 | Cu/Al coil with Silver Line anti-corrosion treatment | € | 1.973 | 2.154 | | |
| TR2C4 | Cu/Al coil and sheet metal with anti-corrosion treatment | € | 4.668 | 4.848 | | |
| **ACCESSORIES SUPPLIED SEPARATELY** | | | | | | |
| e-PRO* | Wired Remote control, Wi-Fi connected | code | 0100225#20010 | | | |
| | | € | 463 | | | |
| e-LITE* | Multifunction touch screen wired control | code | 011049#0101 | | | |
| | | € | 463 | | | |
| Hi-TV415* | Centralised multifunction touchscreen remote control | code | 0103123#00001 | | | |
| | | € | 659 | | | |
| Connect Box * | Heat pump communication gateway and MAXA CONNECT | code | 011049#0103 | | | |
| | | € | 318 | | | |
| i-CR2* | Wall-mounted remote control | € | 319 | | | |
| AG | Anti-vibration support | code | 015908#010050 | | | |
| | | € | 240 | | | |
| FD | Dirt separator filter | code | 0119100081 | | | |
| | | € | 424 | | | |
| FY | Y-strainer | code | 017121#2401 | 017121#2501 | 017121#2601 | 017121# 2701 |
| | | € | 92 | 92 | 92 | 92 |
| SAS | Remote system sensor - Domestic hot water storage sensor | code | 0110321000001 | | | |
| | | € | 48 | | | |
| SPS | Solar panel sensor | code | CH-CC-EN-ST-0015 | | | |
| | | € | 104 | | | |
| VDIS3 | Three-way diverting valve for domestic hot water production in a thermal storage tank | code | 011049#0102 | | | |
| | | € | 449 | | | |

(1) GI already included
For accessories of the DAS monitoring system (ISK, LNC, OVPN), see chapter "Connection devices for Maxa DAS supervision system"
* Accessories that cannot be used simultaneously

# ACT

## Buffer tank for hot water and chilled water

50-75-95 L

The technical storage tank called ACT consists of a horizontally mounted cylindrical vessel, available in three different capacities.
The tank is thermally insulated so that it can operate with both hot and cold water and is equipped with hydraulic connections arranged to promote a uniform flow throughout the entire tank.
The ACT storage tank is closed with a supporting frame and powder-coated metal sheet panels in the same color as the units of the i-32V5 series. The supply includes both the fixing screws between the heat pump and the ACT frame and the adjustable feet for leveling the assembly. Several accessories are available, such as various sizes of electric heaters complete with their own electrical panel and the expansion vessel.

**ACT is suitable for supporting the i-32V5 series.**

Electric heating element (optional)

Insulating panel

### Construction Features

- Inertial buffer tank with a capacity of 50, 75 and 95 litres.
- Compact dimensions and single structure for all storage tank sizes.
- Anti-vibration mounts between inertia base and heat pump (standard supply)
- No. 1 flexible–extendable fitting for connecting the buffer tank to the heat pump (standard supply)
- Height-adjustable feet (standard)
- Anti-corrosion painting of the storage tank.
- Insulation in EDILFIBER, a newly designed thermal insulator consisting of polyester fiber panels, predominantly produced from recycled municipal separated waste collection (PET bottle collection), and therefore environmentally friendly.
- Polyurethane powder-coated sheet metal.
- Water filling/draining valve.
- 18-litre expansion vessel (optional, factory-installed).
- Electric heaters rated 1.2 kW (single-phase), 2, 3 and 4.5 kW, available in both single-phase and three-phase versions, managed in integration and/or replacement mode, with dual safety level consisting of an automatic reset thermostat and a manual reset thermostat to protect both the system and the user (optional, factory-installed).

## Accessories

### Factory-installed

- **RE1.2M**: Single-phase 1.2 kW electric heater
- **RE2.0M**: Single-phase 2 kW electric heater
- **RE3.0M**: Single-phase 3 kW electric heater
- **RE4.5M**: 4.5 kW single-phase electric heater
- **RE2.0T**: Three-phase electric heater 2 kW
- **RE3.0T**: 3 kW three-phase electric heater
- **RE4.0T**: Three-phase electric heater 4.0 kW
- **VE18AT**: 18 l expansion vessel

| | | | 50 | 75 | 95 |
|---|---|---|---|---|---|
| ACT | Useful capacity | L | 50 | 75 | 95 |
| | Insulation thickness | mm | 50 | 50 | 50 |
| | Thermal conductivity coefficient | W/mK | 0,04 | 0,04 | 0,04 |
| | Max operating temp. | °C | 95 | 95 | 95 |
| | Maximum operating pressure | bar | 6 | 6 | 6 |
| | Max test pressure | bar | 3 | 3 | 3 |
| | Curb weight | kg | 60 | 65 | 69 |
| | Operating weight | kg | 110 | 140 | 165 |
| | Dimensions | mm | 1360x466x504 (527) | | |

## Dimensional Drawings

### ACT 50-75-95 L

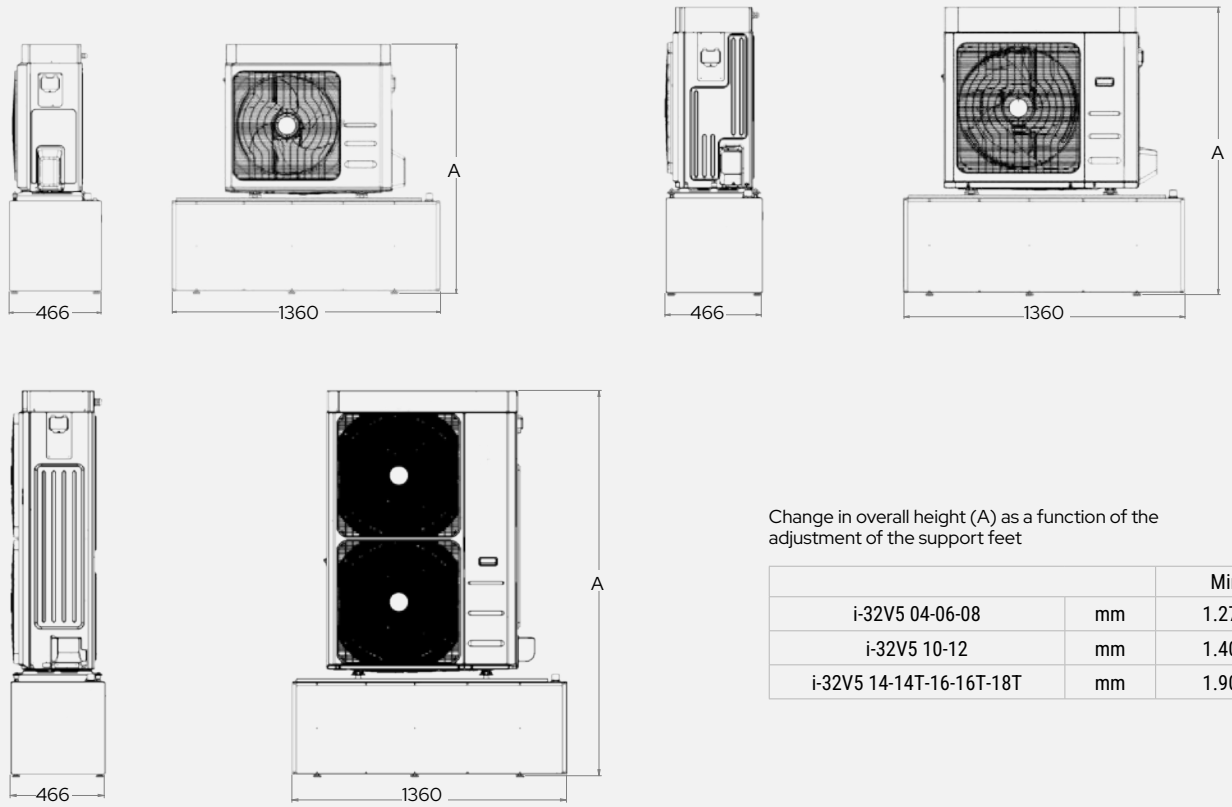


Change in overall height (A) as a function of the adjustment of the support feet

| | | Min |
|---|---|---|
| i-32V5 04-06-08 | mm | 1.270 |
| i-32V5 10-12 | mm | 1.400 |
| i-32V5 14-14T-16-16T-18T | mm | 1.900 |

Dimensions in mm

## Price list

| ACT | | | 50 l | 75 l | 95 l |
|---|---|---|---|---|---|
| Buffer tank | | € | 1.245 | 1.308 | 1.403 |
| **FACTORY-MOUNTED ACCESSORIES** | | | | | |
| RE1.2M | Single-phase electric heater 1.2 kW | € | 275 | 275 | 275 |
| RE2.0M | Single-phase 2 kW electric heater | € | 445 | 445 | 445 |
| RE3.0M | Single-phase 3 kW electric heater | € | 478 | 478 | 478 |
| RE4.0M | Single-phase electric heater 4.5 kW | € | 511 | 511 | 511 |
| RE2.0T | Three-phase electric heater 2 kW | € | 478 | 478 | 478 |
| RE3.0T | Three-phase electric heater 3 kW | € | 511 | 511 | 511 |
| RE4.0T | Three-phase electric heater 4.5 kW | € | 544 | 544 | 544 |
| VE18AT | Expansion vessel 18 l | € | 214 | 214 | 214 |

# ACT 120/220

## Buffer tank for hot water and chilled water

120–220 L

The technical storage tank named ACT consists of a horizontally positioned cylindrical tank, available in different capacities. The tank is thermally insulated with expanded polyurethane foam, so that it can operate with both hot and cold water.

ACT offers the option of installing hydraulic connections positioned to promote a uniform flow inside the tank, allowing it to be used both as an in-line buffer tank and as a hydraulic separator. The ACT storage unit constitutes a supporting structure and is completed with RAL 7043 coloured panels. ACT includes both the fastening hardware between the heat pump and the frame, and the adjustable feet for leveling the assembly.

**ACT is suitable for supporting various heat pump models: the i-290 series from 0106 to 0127, i-32V5, i-32V5 Midi.**
Some accessories are available, such as: various sizes of electric heaters equipped with their own electrical panel, expansion vessels, and the antifreeze valve.

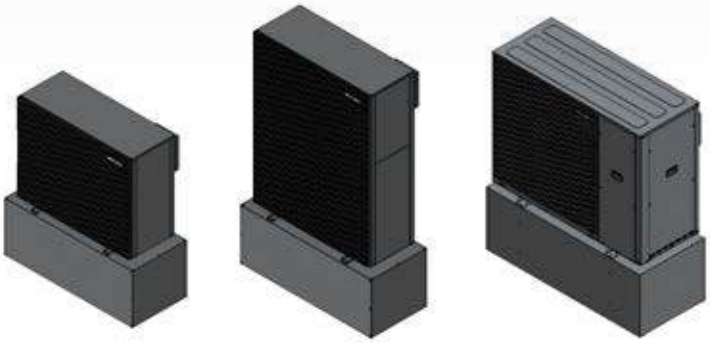

### Construction Features

- Inertial buffer tank with a capacity of 120 and 220 litres.
- Compact dimensions with two different configurations and sizes.
- Compact dimensions with two different configurations and sizes.
- Sturdy frame suitable for supporting various heat pump models: the i-290 series from 0106 to 0127, i-32V5, i-32V5 Midi.
- Anti-vibration mounts between ACT and heat pump (standard)
- Connection fittings between ACT and heat pump (optional, supplied separately)
- Height-adjustable feet (standard)
- Anti-corrosion finish of the storage tank
- Expanded polyurethane foam insulation
- Water filling/drain valve (standard supply)
- Air vent (supplied separately)
- Multiple expansion vessel models (optional, supplied separately)
- 5 models of supplementary electric heaters, both single-phase and three-phase (optional, supplied separately)
- Anti-freeze kit, thermal anti-freeze drain valve, suitable for protecting systems without glycol inside the piping (optional, supplied separately)

## Accessories

- **RE1.0M**: Single-phase electric heater 1.0 kW
- **RE2.0M**: Single-phase 2 kW electric heater
- **RE3.0M**: Single-phase 3 kW electric heater
- **RE4.0M**: Single-phase electric heater 4.0 kW
- **RE3.0T**: 3 kW three-phase electric heater
- **RE5.0T**: Three-phase electric heater 5.0 kW
- **ANTIFREEZE KIT:** Antifreeze protection. Protects the unit and the system against possible damage caused by an unexpected drop in the operating temperature of the process water close to freezing point, by draining the system.
- **VE7AT**: 7 l expansion vessel (ACT 90, 120)
- **VE12AT:** 12 l expansion vessel (ACT 170)
- **VE15AT**: 15 l expansion vessel (ACT 220)
- **KF1:** Mounting Kit i-32V5 (06A ~ 18T A)
- **KF2:** i-290 Fastening Kit (0106 ~ 0118)
- **KF3:** i-32V5 Midi mounting kit (0121 ~ 0132), i-290 (0121 ~ 0127)
- Hydraulic kit consisting of double insulated copper pipe with tailpiece, plus shut-off valve with insulating shell (supplied separately)
- Air vent (supplied separately)

Electric heaters cannot be installed when combined with i-290 range heat pumps.

| | | | 120 | 220 |
|---|---|---|---|---|
| ACT | Useful capacity | Lt | 120 | 220 |
| | Coeff. Thermal Conductivity | W/mK | 0,023 | 0,023 |
| | Insulation thickness | mm | 55 | 55 |
| | Tmax operating | °C | 95 | 95 |
| | Pmax operating | Bar | 3 | 3 |
| | Pmax test | Bar | 6 | 6 |
| | Curb weight | kg | 20 | 30 |
| | Operating weight | kg | 140 | 250 |
| | Dimensions (WxDxH) | Mm | 1385x522x522 | 1732x745x622 |
| | Expansion vessel volume | Lt | 7 | 15 |
| | Suggested pairing | | i-290 0112<br>i-32V5 12-14 | i-290 0125-127<br>i-32V5 Midi 0126-0132 |

Preliminary data

## Dimensional Drawings

### ACT 120 L

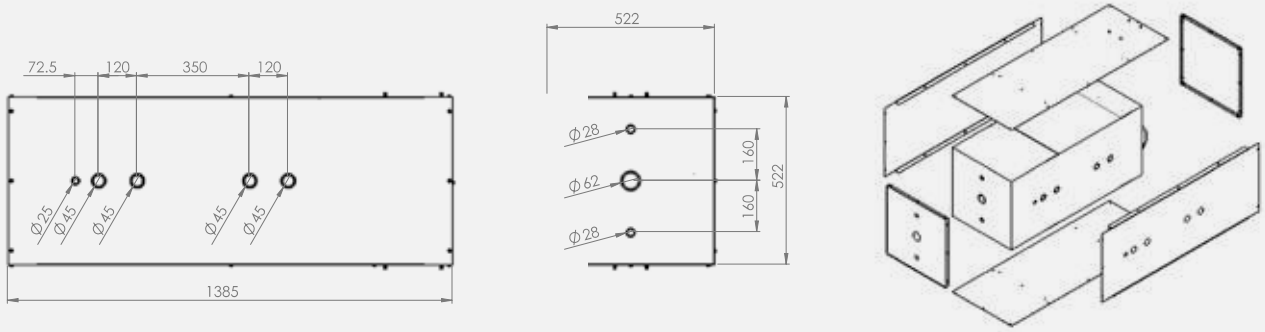


### ACT 220 L

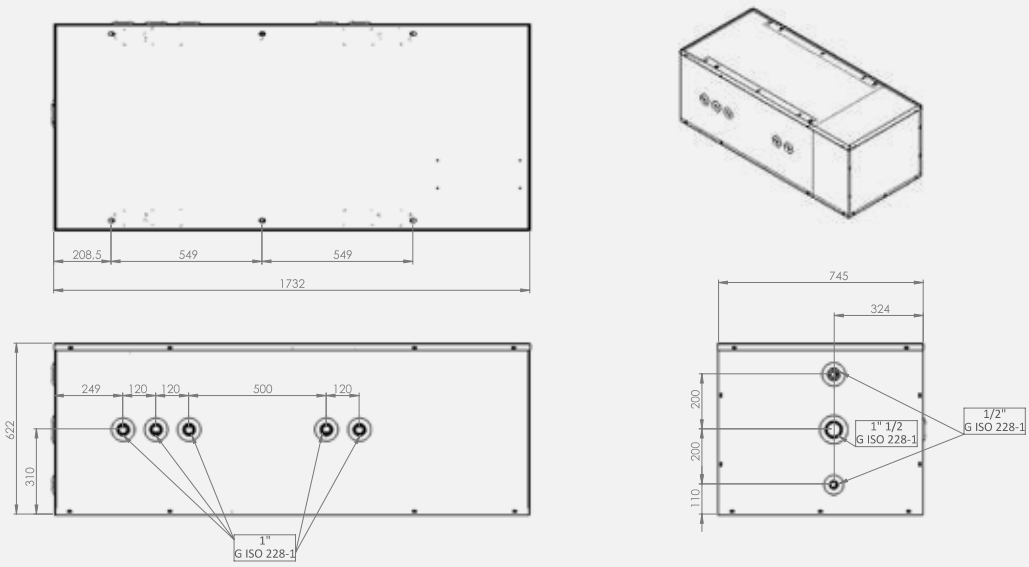


Dimensions in mm

# i-HPV5H

## Reversible air-to-water inverter heat pumps with axial fan, R32 refrigerant

40 kW÷70 kW

**Compressors**: DC inverter models are hermetic scroll type, specifically designed to operate with R32 refrigerant gas.

**Carpentry**: suitable structure for outdoor installation made of thick profiles in hot-dip galvanized steel sheet, polyester powder-coated, RAL 7035 textured finish.

**User Side Heat Exchanger**: brazed plate heat exchanger in AISI 304 stainless steel, coated with black flexible closed-cell elastomeric foam.

| MADE IN ITALY | R32 | 58°C | A++ | WI-FI OPTIONAL | CASCADE MANAGEMENT FOR UP TO 7 UNITS | SCROLL INVERTER | SILENCED VERSION | VERSION BT | ACCESSORY DS |
|---|---|---|---|---|---|---|---|---|---|
| | REFRIGERANT 675 GWP | OUTLET WATER Supply Temperature | ENERGY EFFICIENCY CLASS | | | | | | |

**Source Side Heat Exchanger:** the air heat exchangers are made of copper tubes and aluminum fins. The tubes are mechanically expanded into the aluminum fins to increase the heat transfer coefficient.

**Fan**: the fan is of the axial type with airfoil-profile blades. The electric motor used is controlled with modulation.

**Refrigerant Circuit:** is made of copper piping, brazed and factory-assembled in accordance with EN 13134.
Includes: drier filter; shut-off valve on the liquid line; liquid and humidity sight glass; electronic expansion valve; charging ports; high-pressure safety pressure switch; high and low pressure transducers; cycle reversing valve; receiver and liquid separator; non-return valves; fan silent mode. Digital input that can be activated by an external contact, allowing the sound power level to be reduced by acting on the ventilation.

**Electrical Panel and Control:** fully manufactured and wired in compliance with IEC 60335-2-40. Includes:

- Main isolator with door interlock;
- Isolation transformer for control power supply
- Thermal protection fuses for compressor drivers, EC fan, and pump inverter (where present);
- Automatic circuit breaker for compressor protection (optional);
- Driver for modulating compressor control;
- Phase sequence control relay
- Phase sequence control relay with minimum/ maximum voltage trip setting (optional)
- Thermostatically controlled ventilation inside the electrical panel.
- Interface terminal with alphanumeric display;
- Display function for set values, analog inputs, fault codes, alarm history, and parameter index;
- On/off button and alarm reset;
- Provision for Modbus connectivity (CM accessory).
- Three-phase relay for over- and undervoltage monitoring + phase loss/sequence.

## Operating Areas

### Hot

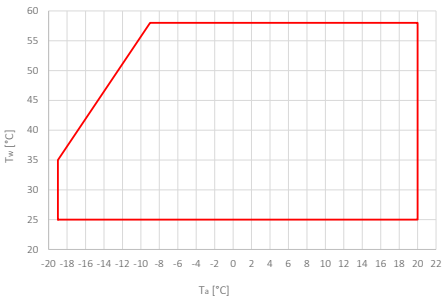


### Cold

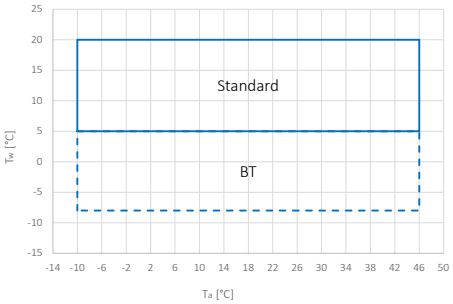


### DHW

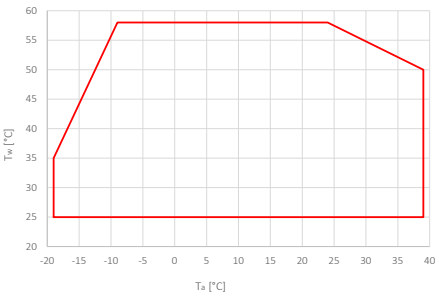


Tw: water temperature - Ta: outdoor air temperature

# Accessories

## Factory-installed

- **KA1** - Antifreeze protection on: heat exchanger and pump. Electric heating element located on the front side of the plate heat exchanger, which is activated when the water temperature inside the exchanger drops below +4°C.
- **KA2** - Antifreeze heater on: heat exchanger, pump and tank – includes KA1. In addition to accessory KA1, an immersion heater is added in the tank. The kit consists of: an AISI 321 sheathed electric heater, a parameterizable digital temperature controller, and a contactor.
- **TR2*** ** - Anti-corrosion coil treatment – thanks to the treatment, the coil becomes flexible to withstand thermal contraction and expansion, mechanically resistant, protected against UV rays, and dirt-repellent.
- **TR2C4*** ** - Anti-corrosion treatment on coil and sheet metal – includes a TR2-type treatment on the coil and, in addition, the hot-dip galvanized steel panels are painted to make them suitable for unit installations in C4H environments, in accordance with UNI EN 12944. The external fastening hardware is made of AISI304, class A2. The treatment also includes the fan protection grille.
- **RP** - Coil protection grilles – wire mesh to prevent foreign objects from entering the coil and to protect the coil from accidental contact with objects or people (they can also be requested as a separate accessory).
- **C *** - Ductable version. With the ductable version, the same diffuser used in the SSL version is employed to obtain a higher fan head, allowing the ducting of the air discharge. The figure shows an example of a possible ducted installation.
- **C(S) *** - Ductable version with cowls. In addition to the ductable version, thermo-acoustic cowls are installed on the compressors.
- **SL *** - Silent version. The silent unit (equipped with SL accessory) features an innovative thermo-acoustic jacket on the compressors. This insulation allows a noise reduction of up to 10% at certain compressor rotation frequencies.
- **SSL** * - Super silenced version. The super silenced unit (equipped with the SSL accessory) includes, in addition to the thermo-acoustic jacket on the compressors, a special fan with diffuser. This component increases fan efficiency, allowing speed reduction and consequently lowering sound pressure levels and energy consumption. In this way, significant amounts of electrical energy can be saved for each fan.
- **DS** - The unit with desuperheater includes the addition of a brazed-plate heat exchanger made of AISI 316 stainless steel, factory-insulated, a variable-speed circulator, and a remote temperature sensor. The desuperheater allows partial recovery of the condensation heat.
- **BT** - The BT accessory allows the operating range of the water temperature to be extended down to -8°C. In this case, it is necessary to use a mixture of water and glycol.
- **IM** - Circuit breakers on compressors - Overcurrent switches applied to compressors, protecting components from faults caused by possible current spikes.
- **GI -** System management module - allows the management of the following functions: management of the booster circulation pump with the aid of a room thermostat (not supplied); management of the mixing valve on the system side in both heating and cooling modes; management of solar-thermal integration.
- **CM** - BMS connectivity setup – ModBus protocol included – accessory that enables the connection of the unit to external controllers via serial cable with RS-485 electrical standard and ModBus RTU protocol.
- **RFM** - Discharge and suction shut-off valve for compressors Shut-off valve installed on the compressor suction and discharge lines; it simplifies maintenance by avoiding the need to recover the refrigerant from the entire unit during servicing.
- **TE2** - Special mechanical seal for pump with glycol content above 25% and below 50% For water-glycol mixtures with a glycol weight percentage above 25% and up to 50%, a different mechanical seal is used to ensure correct operation of the pump.
- **PS****: Fixed-speed AC circulation pump
- **PSI****: AC circulation pump controlled via external inverter installed in the electrical panel
- **PSEC****: Single EC pump equipped with integrated frequency converter (high head)
- **PS-SI****: Fixed-speed AC circulation pump with integrated 400-litre tank and 24-litre expansion vessel
- **PSI-SI****: AC circulation pump controlled via an external inverter installed in the electrical panel, with integrated 400-liter tank and 24-liter expansion vessel
- **PSEC-SI****: Single EC pump equipped with integrated frequency converter (high head), with integrated 400-litre tank and 24-litre expansion vessel
- **GL** - Packaging with wooden crate. Special packaging consisting of a wooden crate to protect the unit during transport. Optional; it is recommended for long-distance shipments (for example, container transport) or when the unit is stored in a warehouse where it may be subject to accidental damage. The boards that make up the structure comply with ISPM15 regulations.

## Provided separately

* Accessories that cannot be used simultaneously
** Accessories not usable simultaneously
*** Accessories not usable simultaneously

# Accessories

- **SAS** - Domestic hot water probe / Remote system probe – in some system configurations (e.g. heat pump in parallel with the boiler on the same hydronic circuit and diverter valve for boiler exclusion), it may be necessary to enable a system temperature probe so that the unit controller can correctly manage the operation. The remote system probe controls the heat pump temperature only during the compressor start-up phase; shutdown is managed by the probe located on the heat pump flow line.
- **AG** - Anti-vibration kit – designed to prevent transmission of vibrations to the structure; must be installed under the unit, in the dedicated mounting holes.
- **FY** - Y-strainer – contains a stainless steel mesh screen (500 µm filtration) that collects solid materials present in the water. Filtration prevents blockage and/or damage to the devices installed downstream of the strainer. Alternatively, it is possible to install a dirt separator that ensures a filtration level not greater than 1 mm (in this case, it is no longer necessary to install the Y-strainer).
- **FD-DA** - Air Separator Kit - Use as air separator (installation in the system supply line): component that allows continuous capture and expulsion of air and any other gases dissolved in the water of the hydraulic circuit. The removal efficiency of this device is very high, allowing the elimination of non-condensable gases present in the circuits down to the level of microbubbles. Use as dirt separator (installation in the return pipe, before the inlet to the heat pump): allows blocking and retaining the heavier impurities present in the hydraulic circuit, which are captured by a synthetic filter mesh and collected in a settling chamber. A magnetic device located inside the body of the dirt separator also allows interception of ferromagnetic particles.
- **VDIS4** - Three-way diverting valve for DHW production. Valve that diverts the water flow produced by the heat pump between the system and a buffer tank for the production of domestic hot water. Three-way motorized ball valve, DN (1"1/2), Kvs 28, complete with actuator, insulation shell and spacer, ensuring correct operation even with glycolated water. The power cable from the actuator is 1 metre long.
- **RV** - Grooved connection joint. To facilitate installation to the system, a short length of carbon steel pipe can be supplied which has, on one side, a grooved connection compatible with the one on the unit and equipped with the appropriate clamp for making the connection, and on the other side a G 1" 1/2 M threaded connection. The kit consists of 2 pipe sections and 2 grooved connections for connecting the pipe sections to the unit.
- **ISK**** - USB/RS485 serial converter – interface device capable of reading and writing control registers via the RS485 standard and converting them to a USB port that can be connected to any supervision system.
- **LNC**** - LAN-Wi-Fi router – device that allows the unit to be connected to a local network via Ethernet cable or Wi-Fi coverage for remote monitoring.
- **OVPN**** - 4G LAN-Wi-Fi router with VPN tunnelling – a device that allows you to connect the unit remotely to an industrial router using the secure OPENVPN service.
- **i-CR2**** - Wall-mounted remote control – Modbus remote controller with negative LCD and capacitive keys. The device is intended to be used as a remote unit keypad with local temperature sensing and replicates the functions of the on-board unit controller.
- **e-LITE**** - Color touch-screen wired controller, which can be used as a remote keypad for the heat pump, as it replicates the functions of the on-board unit display. It is equipped with local temperature sensing and time scheduling.
- **Hi-TV415**** - Color touchscreen wired remote controller for centralized management of a chiller/heat pump cascade, for up to 7 units.
- **Connect Box**** - Wi-Fi communication gateway for the Maxa Connect App.
- **e-Pro**** - Color touch-screen Wi-Fi wired controller that allows both local and remote control via the MyMaxa app.
- **VSA** - Anti-freeze drain valve. Accessory that protects the unit in case of low outdoor air temperatures.

** Accessories not usable simultaneously

**e-PRO***
Wi-Fi multifunction remote controller
ACCESSORY

**e-LITE**
Multifunction remote controller
ACCESSORY

**Hi-TV415**
Touch screen remote controller for cascade management (max 7 units)
ACCESSORY

* Energy measurements not available

| | | | 0140 | 0250 | 0260 | 0270 |
|---|---|---|---|---|---|---|
| **Cooling** | Cooling capacity (1) | kW | 29,7 | 36,2 | 48 | 52,7 |
| | Power input (1) | kW | 9,62 | 11,8 | 15,6 | 17,8 |
| | E.E.R. (1) | W/W | 3,09 | 3,07 | 3,08 | 2,96 |
| | Cooling capacity (2) | kW | 37,2 | 55,1 | 65,1 | 65,6 |
| | Power input (2) | kW | 9,05 | 13,3 | 15,7 | 16,9 |
| | E.E.R. (2) | W/W | 4,11 | 4,14 | 4,15 | 3,88 |
| | SEER (5) | W/W | 4,66 | 4,63 | 4,74 | 4,68 |
| | Water flow rate (1) | L/s | 1,42 | 1,73 | 2,30 | 2,52 |
| | Pressure drops on the hydronic circuit side (1) | kPa | 21 | 26 | 36 | 36 |
| **Heating** | Heating capacity (3) | kW | 40,1 | 50,4 | 61,6 | 66,8 |
| | Input power (3) | kW | 10,0 | 12,5 | 15,3 | 16,6 |
| | C.O.P. (3) | W/W | 4,01 | 4,03 | 4,03 | 4,02 |
| | Heating capacity (4) | kW | 40,7 | 49,9 | 59,7 | 66,7 |
| | Power input (4) | kW | 12,7 | 15,6 | 18,6 | 20,7 |
| | C.O.P. (4) | W/W | 3,20 | 3,20 | 3,21 | 3,22 |
| | Heating capacity (12) | kW | 38,4 | 48,3 | 56,2 | 61,9 |
| | Power input (12) | kW | 14,2 | 18,1 | 21,8 | 23,9 |
| | C.O.P. (12) | W/W | 2,70 | 2,67 | 2,58 | 2,59 |
| | SCOP (6) | W/W | 4,24 | 4,28 | 3,91 | 3,94 |
| | Water flow rate (4) | L/s | 1,95 | 2,39 | 2,86 | 3,19 |
| | Pressure drops on the hydronic circuit side (4) | kPa | 37 | 49 | 58 | 56 |
| | Energy efficiency - water 35°C / 55°C | Class | A++ / A++ | A++ / A++ | A++ / A++ | A++ / A++ |
| **Compressor** | Type | | Scroll DC Inverter | | | |
| | Number | | 1 | 2 | 2 | 2 |
| | Refrigerant oil (type) | | FW68S | FW68S | FW68S | FW68S |
| | Refrigerant oil (quantity) | mL | 1900 | 3800 | 3800 | 3800 |
| | Refrigerant circuits | | 1 | 1 | 1 | 1 |
| **Refrigerant** | Type | | R32 | | | |
| | Refrigerant quantity (7) | kg | 6,5 | 8,5 | 11,7 | 12,0 |
| | Refrigerant quantity in tons of $CO_2$ equivalent (7) | Ton | 4,4 | 5,7 | 7,9 | 8,1 |
| | Design pressure (high/low) heat pump model | bar | 46 / 27,6 | | | |
| | Design pressure (high/low) chiller model | bar | 46 / 27,6 | | | |
| **Outdoor zone fans** | Type | | EC | | | |
| | Number | | 1 | | | |
| | Rated power (1) | kW | 1,95 | 1,95 | 3,1 | 3,1 |
| | Maximum absorbed power | kW | 1,95 | 1,95 | 3,1 | 3,1 |
| | Maximum absorbed current | A | 4,8 | 4,8 | 4,8 | 4,8 |
| | Nominal air flow rate | L/s | 4368 | 5431 | 6417 | 5547 |
| **Internal heat exchanger** | Internal heat exchanger type | | Plate / BPHE | | | |
| | No. of indoor heat exchangers | | 1 | 1 | 1 | 1 |
| | Water content | L | 3,05 | 3,54 | 4,27 | 5,12 |
| **Hydraulic circuit** | Water content of the hydronic circuit | L | 5 | 5 | 6 | 7 |
| | Maximum pressure of hydronic kit (safety valve setting) | bar | 6 | 6 | 6 | 6 |
| | Grooved-type hydraulic connections | inch | 1" 1/2 (DN 40) | 1" 1/2 (DN 40) | 1" 1/2 (DN 40) | 1" 1/2 (DN 40) |
| | Minimum water volume (8) | L | 286 | 389 | 490 | 522 |
| | Rated pump power (1) | kW | - | - | - | - |
| | Maximum absorbed pump power | kW | - | - | - | - |
| | Maximum absorbed pump current | A | - | - | - | - |
| **Sound data** | Sound power level Lw (9) | dB(A) | 77 | 83 | 84 | 84 |
| | Sound power level Lw SL configuration (9) | dB(A) | 76 | 82 | 83 | 83 |
| | Sound power level Lw SSL configuration (9) | dB(A) | 75 | 81 | 82 | 82 |
| | Sound power level Lw (13) | dB(A) | 74 | 75 | 80 | 81 |
| **Electrical data** | Power supply | | 400V/3P+N+T/50Hz | | | |
| | Maximum absorbed power | kW | 22 | 31 | 37 | 41 |
| | Maximum absorbed current | A | 35 | 49 | 59 | 65 |
| | Maximum power input with antifreeze kit | kW | 23 | 31 | 38 | 41 |
| | Maximum current draw with antifreeze kit | A | 36 | 51 | 61 | 67 |

(1) Cooling: outdoor air temperature 35 °C; inlet/outlet water temperature 12/7 °C.
(2) Cooling: outdoor air temperature 35 °C; inlet/outlet water temperature 23/18 °C.
(3) Heating: outdoor air temperature 7 °C d.b. 6 °C w.b.; inlet/outlet water temperature 30/35 °C.
(4) Heating: outdoor air temperature 7 °C d.b. 6 °C w.b.; inlet/outlet water temperature 40/45 °C.
(5) Cooling: water inlet/outlet temperature 7/12°C.
(6) Heating: average climatic conditions; Tbiv = -7 °C; low temperature, variable output, constant flow rate.
(7) Indicative data subject to change. For the correct data, always refer to the technical nameplate on the unit.
(8) The indicated volume refers to the total required; the designer must ensure this requirement is met by taking into account the amount already present inside the unit, depending on the selected hydronic kit (please check this value in the technical data sheet).
(9) Sound power: heating mode condition (3) according to EN 12102-1:2013; value determined on the basis of measurements carried out in accordance with standard UNI EN ISO 9614-1.
(10) Heating: outdoor air temperature 7 °C d.b., 6 °C w.b.; inlet/outlet water temperature 47/55 °C.
(11) Sound power: heating mode at partial load in accordance with Annex A of EN 12102:2017; value determined on the basis of measurements carried out in accordance with UNI EN ISO 9614-1, in compliance with the requirements of the Eurovent and Heat Pump Keymark certifications.
(**) for PS/PSI pump kit
N.B. The performance data shown are indicative and may be subject to change. Furthermore, the capacities stated at points (1), (2), (3) and (4) are to be understood as referring to the instantaneous power according to UNI EN 14511. The data stated at points (5) and (6) are determined in accordance with UNI EN 14825.

# Dimensional Drawings

## i-HPV5H 0140 / 0250 / 0260 / 0270

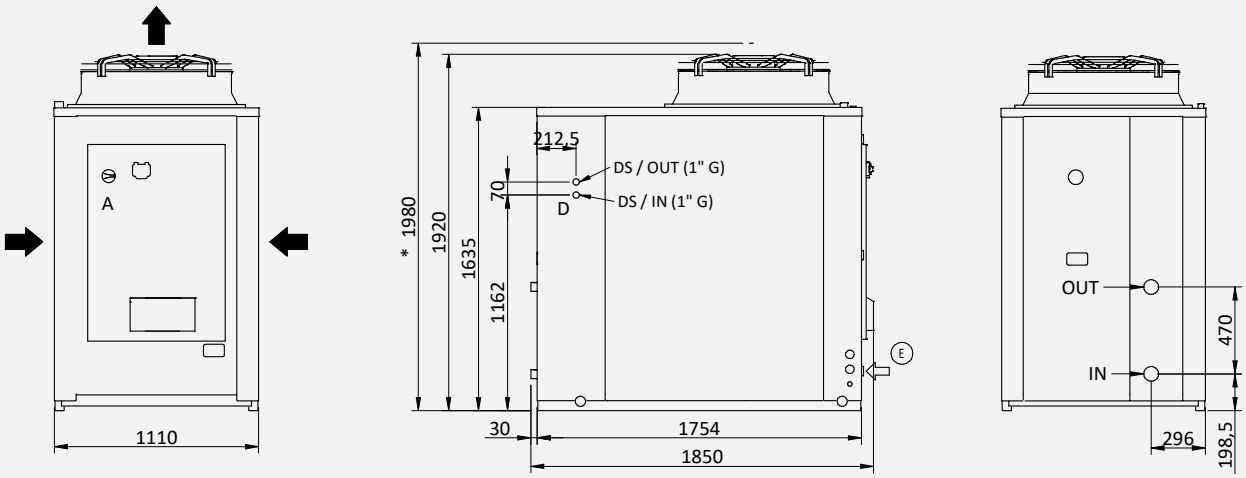


Version with tank kit

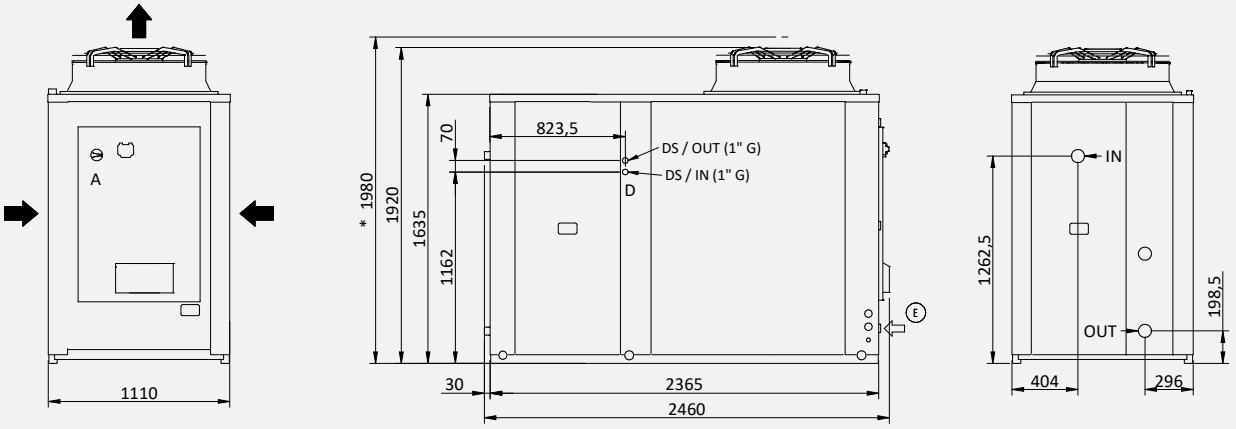


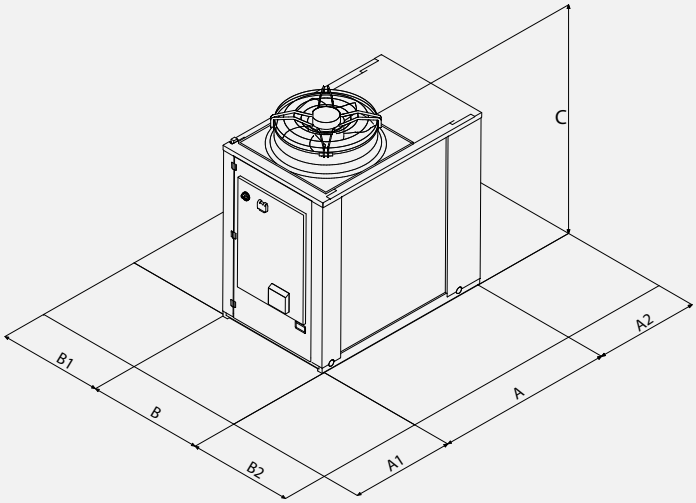


| Clearances | | A1 | A2 | B1 | B2 |
|---|---|---|---|---|---|
| 0240 | mm | 1200 | 1000 | 1500 | 1500 |
| 0250 | mm | 1200 | 1000 | 1500 | 1500 |
| 0260 | mm | 1200 | 1000 | 1500 | 1500 |
| 0270 | mm | 1200 | 1000 | 1500 | 1500 |

| | | 0140 | 0250 | 0260 | 0270 |
|---|---|---|---|---|---|
| L | mm | 1850 | 1850 | 1850 | 1850 |
| L (with tank) | mm | 2460 | 2460 | 2460 | 2460 |
| P | mm | 1110 | 1110 | 1110 | 1110 |
| H | mm | 1920 | 1920 | 1920 | 1920 |
| H (SSL) | mm | 1980 | 1980 | 1980 | 1980 |
| Shipping weight (Standard) | kg | 415 | 505 | 525 | 575 |

IN/OUT: 1" 1/2 Grooved
E: Power supply input
D IN/OUT: Hydraulic connections for desuperheater kit 1" G

Dimensions in mm

# System Diagram - Standard Application

| | | | | | | | |
|---|---|---|---|---|---|---|---|
| 1 | i-HPV5 heat pump | 5 | DHW tank (Puffroller) | 10 | Water connection | 15 | Y-strainer |
| 2 | 3-way DHW/system valve (VDIS4) | 6 | Fast DHW heater | 12 | Hi-TV415 Control | 24 | Technical water tank (Puffroller) |
| 4 | DHW temperature sensor (SAS) | 7 | Expansion vessel | 13 | e-PRO control | | |

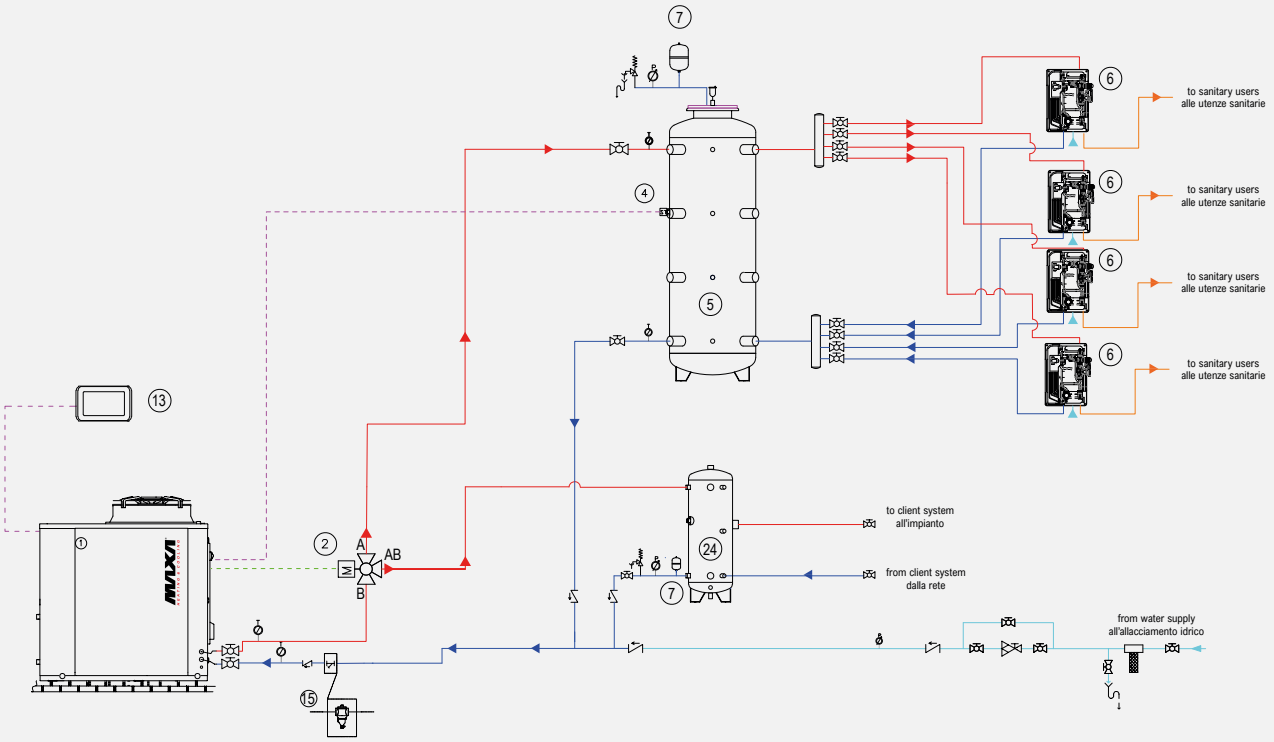


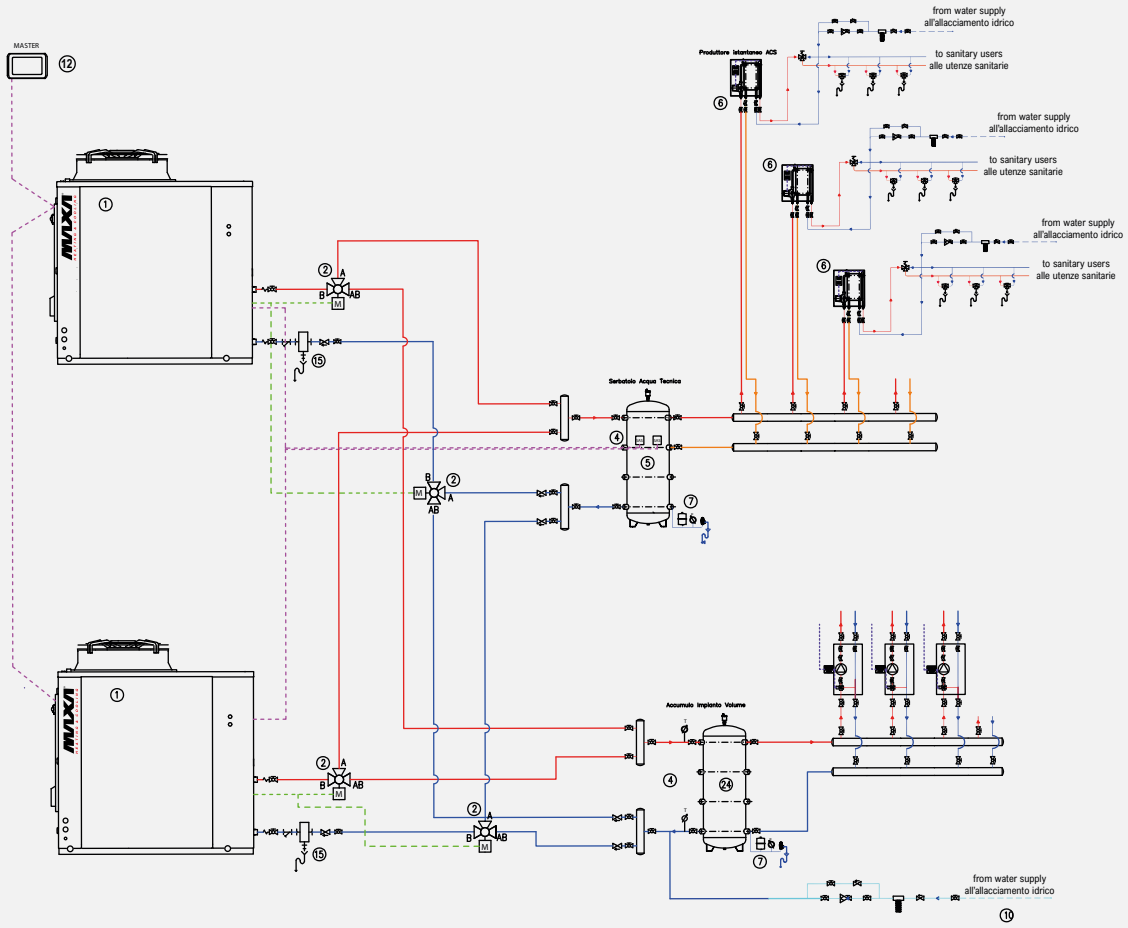


Purely indicative and non-binding diagram; for the construction of the system, it is necessary to refer to a design prepared by a qualified technician.

# Price list

| i-HPV5H | | | 0140 | 0250 | 0260 | 0270 |
|---|---|---|---|---|---|---|
| i-HPV5H | Reversible inverter heat pump | € | 23.949 | 29.105 | 31.136 | 35.335 |

| FACTORY-MOUNTED ACCESSORIES | | | | | | |
|---|---|---|---|---|---|---|
| BT | Low water temperature version | € | 915 | | | |
| C | Ducted version (not compatible with SL and SSL) | € | 1.200 | | | |
| C(S) | Ductable version with compressor soundproofing | € | 1.368 | 1.577 | 1.577 | 1.577 |
| CM | Serial communication module for Modbus | € | 853 | | | |
| DS | Partial recovery (with GI module only) - desuperheater | € | 2.167 | 2.787 | 2.967 | 3.226 |
| DSFR | Phase sequence and phase loss monitoring device + undervoltage and overvoltage relay | € | Standard | | | |
| GI | System management module | € | 651 | | | |
| GL | Crate packaging in wooden cage | € | 435 | | | |
| | Crate packaging in wooden frame (with YES accessory) | € | 602 | | | |
| IM | Magnetothermal circuit breakers | € | 362 | 775 | 775 | 775 |
| KA1 | Adhesive resistance heat exchanger + pump resistance (if present) | € | 414 | | | |
| KA2 | Adhesive resistance of heat exchanger, pump resistance and tank resistance | € | 1.549 | | | |
| PD | Double AC pump (includes accessory GI) | € | 3.612 | 3.612 | 3.871 | 3.871 |
| PS | Single AC pump | € | 1.664 | 2.039 | 2.039 | 2.039 |
| PSI | Single variable-speed AC pump with inverter control | € | 2.911 | | | |
| PSEC | Single EC pump | € | 4.904 | | | |
| PD-SI | Twin AC pump and buffer tank (includes GI accessory) | € | 8.516 | | | |
| PS-SI | Single AC pump and buffer tank | € | 5.935 | | | |
| PSI-SI | Single inverter-driven modulating AC pump and buffer tank | € | 7.200 | | | |
| PSEC-SI | Single EC pump and buffer tank | € | 8.644 | | | |
| RFM | Discharge and suction valves for compressors | € | 433 | | | |
| RP | Battery protection nets | € | 465 | 929 | 929 | 929 |
| SL | Silencing | € | 274 | 400 | 400 | 400 |
| SSL | Super soundproofing (includes SL) | € | 1.368 | 1.577 | 1.577 | 1.577 |
| TE2 | Special mechanical seal for electric pump with glycol content higher than 25% and lower than 50% – Not available for single EC pump (1) | € | 383 | | | |
| TR2 | Cu-Al coil with anti-corrosion treatment | € | 3.079 | 3.431 | 3.431 | 3.431 |
| TR2C4 | Cu/Al coil and sheet metal with anti-corrosion treatment | € | 5.680 | 6.646 | 6.646 | 6.646 |
| ACCESSORIES SUPPLIED SEPARATELY | | | | | | |
| e-PRO* | Wired Remote control, Wi-Fi connected | code | 0100225#20010 | | | |
| | | € | 463 | | | |
| e-LITE* | Multifunction touch screen wired control | code | 011049#0101 | | | |
| | | € | 463 | | | |
| Hi-TV415* | Touchscreen remote control | code | 0103123#00001 | | | |
| | | € | 659 | | | |
| Connect Box* | Heat pump communication gateway and MAXA CONNECT | code | 011049#0103 | | | |
| | | € | 318 | | | |
| i-CR2* | Wall-mounted remote control | € | 319 | | | |
| FD-DA | Defanging Filter / Deaerator Kit | code | 0102724#250010 | | | |
| | | € | 1.906 | | | |
| RP | Battery protection nets | code | 01921#2801 | 01921#3001 | 01921#3101 | 01921#3201 |
| | | € | 465 | 929 | 929 | 929 |
| AG | Anti-vibration support | code | 019221#NN01 | | | |
| | | € | 520 | | | |
| FY | Y-strainer | code | 017221#NN01 | | | |
| | | € | 147 | | | |
| RV | Grooved Connection Joint | code | 018221#NN01 | | | |
| | | € | 147 | | | |
| SAS | DHW storage sensor - Remote sensor | code | 0110321000001 | | | |
| | | € | 48 | | | |
| VDIS4 | Three-way diverting valve for domestic hot water production in a thermal storage tank | code | 011049#0094 | | | |
| | | € | 639 | | | |

(1) On BT version mandatory with PS - PSI - PD
(2) Installing this accessory precludes the installation of the other control accessories
For accessories of the DAS monitoring system (ISK, LNC, OVPN), see chapter "Connection devices for Maxa DAS supervision system"
* Accessories that cannot be used simultaneously

# Atria

## Hybrid system heat pump & boiler

21 kW ÷ 29 kW

Atria is the ideal solution for domestic/residential installations, especially in situations where replacement on an existing system is required. Respect the environment by reducing carbon dioxide emissions. It is suitable for all types of domestic heating: underfloor heating systems, radiators, fan coils. To date, there are numerous incentives available for energy efficiency retrofits.

MADE IN ITALY

R32 REFRIGERANT 675 GWP

60°C OUTLET WATER Supply Temperature

FULL INVERTER SYSTEM

DOMESTIC HOT WATER

PLATE HEAT EXCHANGER

A hybrid system consists of a heat pump and a condensing boiler, expressly designed and developed by the manufacturer to operate together.
Maxa's new proposal makes it possible to have a hybrid system fully compliant with current regulations and capable of delivering high efficiency, without compromising an eco-friendly choice that reduces carbon dioxide emissions in favor of environmental sustainability.

**The technological integration that ensures:**

- Versatility
- Consumption reduction
- Environmental friendliness thanks to R32 refrigerant gas
- Guaranteed savings
- Possibility to choose between an indoor boiler (I) or an outdoor boiler (E)

## Accessories

### Specific accessories for ATRIA-I supplied separately

- **CDP** - 90° coaxial starting bend, diameter 60/100 mm
- **SDO** - Splitter D.80F-F
- **TPV** - 60/100mm coaxial starting stub
- **DIMA** - Template for Atria hybrid module
- Tap kit

### Specific accessories for ATRIA-E supplied separately

- **DP** - Starting diffuser for ATRIA E, 80 mm diameter (recommended accessory)
- Standard wired remote control for Atria E outdoor boiler module
- **TPV** - 60/100mm coaxial starting stub
- **DIMA** - Template for Atria hybrid module
- Tap kit

For accessories of the i-32V5 range, please refer to the chapter dedicated to the i-32V5 model.

### Versions

- ATRIA-I - Indoor condensing boiler
- ATRIA-E - Outdoor condensing boiler

| | Atria | | 25-I | 30-I | 25-E | 30-E |
|---|---|---|---|---|---|---|
| Condensing boiler | Declared load profile | | XL | XL | XL | XL |
| | Seasonal space heating energy efficiency class | | A | A | A | A |
| | Seasonal water energy efficiency class | | A | A | A | A |
| | Rated heating capacity | kW | 21,0 | 25,0 | 21,0 | 25,0 |
| | Useful heat output at nominal heat output in high-temperature operating mode (P4) | kW | 20,4 | 24,3 | 20,4 | 24,3 |
| | Water heating: annual energy consumption | GJ | 17,3 | 17,4 | 17,3 | 17,4 |
| | Seasonal space heating energy efficiency class | % | 91,7 | 92 | 91,7 | 92 |
| | Seasonal water energy efficiency class | % | 85,1 | 84,86 | 85,1 | 84,86 |
| | Sound power | dB | 50,5 | 52 | 50,5 | 52 |
| | Type | | C13 - C33 - C53 - C63 - C83 | | | |
| | NOx class | mg/kWh | 6 (24,40) | 6 (36,06) | 6 (24,40) | 6 (36,06) |
| | Maximum heating thermal output | kW | 21 | 25,0 | 21 | 25,0 |
| | Maximum DHW heating capacity | kW | 25,5 | 31,0 | 25,5 | 31,0 |
| | Minimum nominal heat output | kW | 3,7 | 4,0 | 3,7 | 4,0 |
| | Maximum useful heating output | kW | 20,4 | 24,2 | 20,4 | 24,2 |
| | Heating capacity (80/60°C) | kW | 3,5 | 3,7 | 3,5 | 3,7 |
| | Heating output (50/30°C) | kW | 3,9 | 4,2 | 3,9 | 4,2 |
| | Efficiency at 100% Pn (80/60°C) | % | 97 | 97,1 | 97 | 97,1 |
| | Efficiency at 100% Pn (50/30°C) | % | 105,1 | 105,5 | 105,1 | 105,5 |
| | Efficiency at 30% Pn (50/30°C) | % | 107,7 | 107,8 | 107,1 | 107,8 |

For complete data on the i-32V5 outdoor unit, please refer to the chapter dedicated to the i-32V5 model.

## Dimensional Drawings

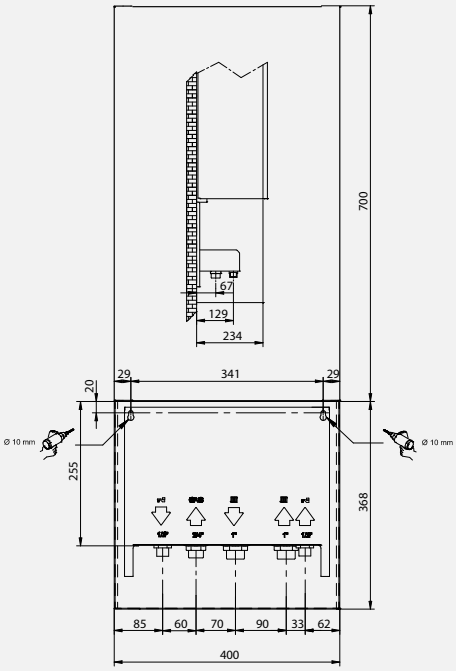


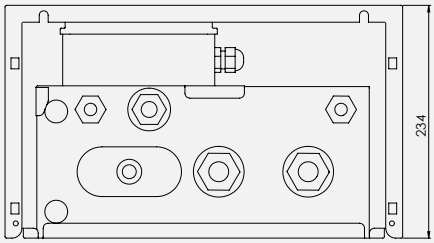


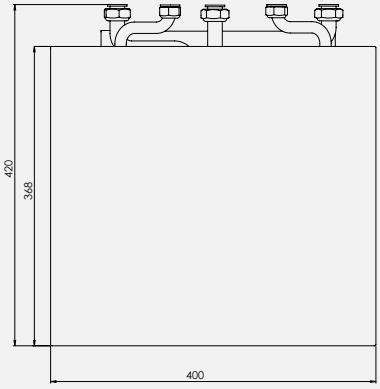


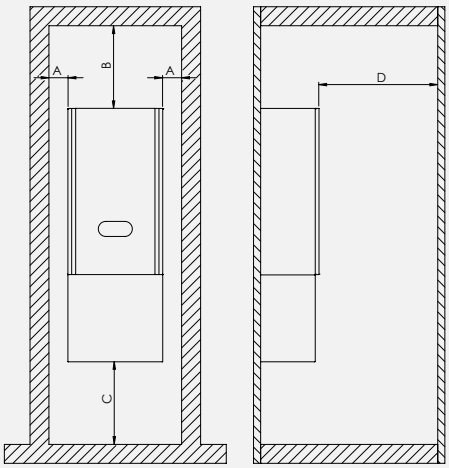


| Atria | | 25-I | 30-I | 25-E | 30-E |
|---|---|---|---|---|---|
| L | mm | 400 | 400 | 400 | 400 |
| P | mm | 250 | 250 | 250 | 250 |
| H | mm | 700 | 700 | 700 | 700 |
| Weight | kg | 31 | 31 | 31 | 31 |

| | | Hybrid Module |
|---|---|---|
| L | mm | 400 |
| P | mm | 234 |
| H | mm | 420 |
| Weight | kg | 8,4 |

| Clearances | A | B | C | D |
|---|---|---|---|---|
| mm | 81 | 350 | 350 | 500 |

Dimensions in mm

## Price list

| | | | |
|---|---|---|---|
| **Atria 25I-6A** | Indoor condensing boiler (heating output 21 kW, DHW output 25 kW) + 6 kW heat pump | € | 8.491 |
| **Atria 25I-KA6A** | Indoor condensing boiler (heating output 21 kW, DHW output 25 kW) + 6 kW heat pump with antifreeze kit | € | 8.800 |
| **Atria 25E-6A** | Outdoor condensing boiler (heating output 21 kW, DHW output 25 kW) + 6 kW heat pump | € | 9.097 |
| **Atria 25E-KA6A** | Outdoor condensing boiler (heating output 21 kW, DHW output 25 kW) + 6 kW heat pump with antifreeze kit | € | 9.406 |
| **Atria 25I-8A** | Indoor condensing boiler (heating output 21 kW, DHW output 25 kW) + 8 kW heat pump | € | 8.818 |
| **Atria 25I-KA8A** | Indoor condensing boiler (heating output 21 kW, DHW output 25 kW) + 8 kW heat pump with antifreeze kit | € | 9.127 |
| **Atria 25E-8A** | Outdoor condensing boiler (heating output 21 kW, DHW output 25 kW) + 8 kW heat pump | € | 9.423 |
| **Atria 25E-KA8A** | Outdoor condensing boiler (heating output 21 kW, DHW output 25 kW) + 8 kW heat pump with antifreeze kit | € | 9.732 |
| **Atria 25I-10** | Indoor condensing boiler (heating output 21 kW, DHW output 25 kW) + 10 kW heat pump | € | 9.864 |
| **Atria 25I-KA10** | Indoor condensing boiler (heating output 21 kW, DHW output 25 kW) + 10 kW heat pump with antifreeze kit | € | 10.173 |
| **Atria 25E-10** | Outdoor condensing boiler (heating output 21 kW, domestic hot water output 25 kW) + 10 kW heat pump | € | 10.470 |
| **Atria 25E-KA10** | Outdoor condensing boiler (heating output 21 kW, DHW output 25 kW) + 10 kW heat pump with anti-freeze kit | € | 10.779 |
| **Atria 25I-10T** | Indoor condensing boiler (heating output 21 kW, DHW output 25 kW) + 10 kW three-phase heat pump | € | 10.538 |
| **ATRIA 25I-KA10T** | Indoor condensing boiler (heating output 21 kW, DHW output 25 kW) + 10 kW three-phase heat pump with antifreeze kit | € | 10.847 |
| **ATRIA 25E-10T** | Outdoor condensing boiler (heating output 21 kW, DHW output 25 kW) + 10 kW three-phase heat pump | € | 11.144 |
| **ATRIA 25E-KA10T** | Outdoor condensing boiler (heating capacity 21 kW, DHW capacity 25 kW) + 10 kW three-phase heat pump with antifreeze kit | € | 11.453 |
| **Atria 30I-6A** | Indoor condensing boiler (heating output 25 kW, DHW output 31 kW) + 6 kW heat pump | € | 8.581 |
| **Atria 30I-KA6A** | Indoor condensing boiler (heating output 25 kW, DHW output 31 kW) + 6 kW heat pump with antifreeze kit | € | 8.890 |
| **Atria 30E-6A** | Outdoor condensing boiler (heating output 25 kW, DHW output 31 kW) + 6 kW heat pump | € | 9.513 |
| **Atria 30E-KA6A** | Outdoor condensing boiler (heating output 25 kW, DHW output 31 kW) + 6 kW heat pump with antifreeze kit | € | 9.822 |
| **Atria 30I-8A** | Indoor condensing boiler (space heating capacity 25 kW, DHW capacity 31 kW) + 8 kW heat pump | € | 8.907 |
| **Atria 30I-KA8A** | Indoor condensing boiler (heating output 25 kW, DHW output 31 kW) + 8 kW heat pump with antifreeze kit | € | 9.216 |
| **Atria 30E-8A** | Outdoor condensing boiler (heating capacity 25 kW, DHW capacity 31 kW) + 8 kW heat pump | € | 9.973 |
| **Atria 30E-KA8A** | Outdoor condensing boiler (heating output 25 kW, DHW output 31 kW) + 8 kW heat pump with antifreeze kit | € | 10.149 |
| **Atria 30I-10** | Indoor condensing boiler (heating output 25 kW, DHW output 31 kW) + 10 kW heat pump | € | 9.954 |
| **Atria 30I-KA10** | Indoor condensing boiler (heating output 25 kW, DHW output 31 kW) + 10 kW heat pump with antifreeze kit | € | 10.263 |
| **Atria 30E-10** | Outdoor condensing boiler (heating output 25 kW, DHW output 31 kW) + 10 kW heat pump | € | 10.886 |
| **Atria 30E-KA10** | Outdoor condensing boiler (heating capacity 25 kW, DHW capacity 31 kW) + 10 kW heat pump with antifreeze kit | € | 11.195 |
| **Atria 30I-10T** | Indoor condensing boiler (heating output 25 kW, DHW output 31 kW) + 10 kW three-phase heat pump | € | 10.628 |
| **ATRIA 30I-KA10T** | Indoor condensing boiler (heating output 25 kW, DHW output 31 kW) + 10 kW three-phase heat pump with antifreeze kit | € | 10.937 |
| **ATRIA 30E-10T** | Outdoor condensing boiler (heating output 25 kW, DHW output 31 kW) + 10 kW three-phase heat pump | € | 11.560 |
| **ATRIA 30E-KA10T** | Outdoor condensing boiler (heating output 25 kW, DHW output 31 kW) + 10 kW three-phase heat pump with antifreeze kit | € | 11.869 |
| **Atria 30I-12** | Indoor condensing boiler (heating output 25 kW, DHW output 31 kW) + 12 kW heat pump | € | 10.859 |
| **Atria 30I-KA12** | Indoor condensing boiler (heating capacity 25 kW, DHW capacity 31 kW) + 12 kW heat pump with anti-freeze kit | € | 11.169 |
| **Atria 30E-12** | Outdoor condensing boiler (heating output 25 kW, DHW output 31 kW) + 12 kW heat pump | € | 11.791 |
| **Atria 30E-KA12** | Outdoor condensing boiler (heating output 25 kW, DHW output 31 kW) + 12 kW heat pump with antifreeze kit | € | 12.101 |
| **Atria 30I-12T** | Indoor condensing boiler (heating output 25 kW, DHW output 31 kW) + 12 kW three-phase heat pump | € | 11.534 |
| **ATRIA 30I-KA12T** | Indoor condensing boiler (heating output 25 kW, DHW output 31 kW) + 12 kW three-phase heat pump with antifreeze kit | € | 11.843 |
| **ATRIA 30E-12T** | Outdoor condensing boiler (heating capacity 25 kW, DHW capacity 31 kW) + 12 kW three-phase heat pump | € | 12.466 |
| **ATRIA 30E-KA12T** | Condensing boiler for outdoor installation (heating output 25 kW, DHW output 31 kW) + 12 kW three-phase heat pump with antifreeze kit | € | 12.775 |

| **ATRIA-I & ATRIA-E ACCESSORIES** | | | |
|---|---|---|---|
| Valve Kit | Valve Kit | code | 019620003 |
| | | € | 147 |
| Dima | Template for Atria hybrid module | code | 019620004 |
| | | € | 147 |
| TPV | 60/100 mm coaxial starting pipe for ATRIA-E and ATRIA-I | code | 019620010 |
| | | € | 62 |
| **EXCLUSIVE ACCESSORIES - ATRIA I** | | | |
| CDP | Double starting bend 90°–60/100 | code | 019620001 |
| | | € | 164 |
| SDO | Splitter D.80F-F | code | 019620002 |
| | | € | 147 |
| **EXCLUSIVE ACCESSORIES - ATRIA E** | | | |
| DP | Starting diffuser for ATRIA E diam. 80 mm (recommended accessory) | € | 147 |

# System Diagram - Standard Application

| | | | | | | | |
|---|---|---|---|---|---|---|---|
| 1 | i-32V5 heat pump | 7 | Expansion vessel | 20 | Mixing valve | 26 | Thermostatic valve |
| 2 | 3-way DHW/system valve (VDIS2) | 10 | Water connection | 23 | Atria boiler | | |
| 4 | DHW temperature sensor (SAS) | 13 | e-PRO control | 24 | Technical water tank (Puffroller) | | |
| 5 | DHW tank (Barrel) | 15 | Y-strainer / Dirt separator filter (FD) | 25 | Disconnector | | |

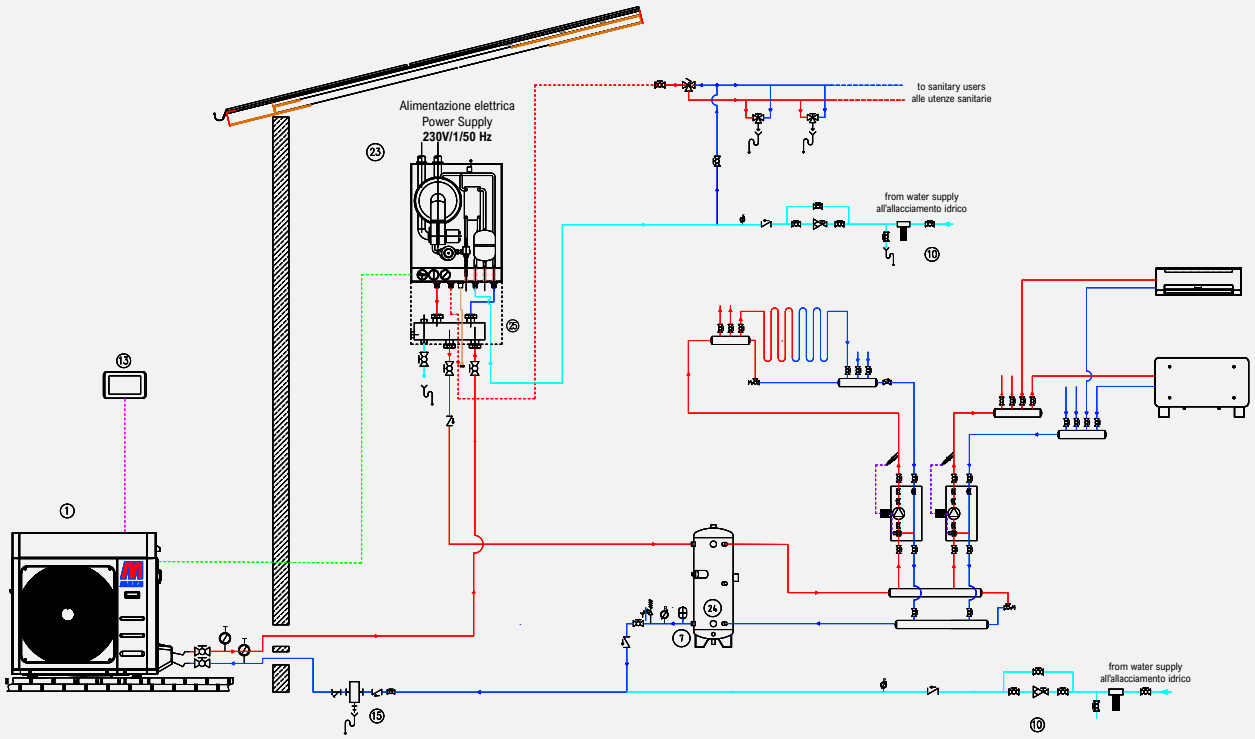


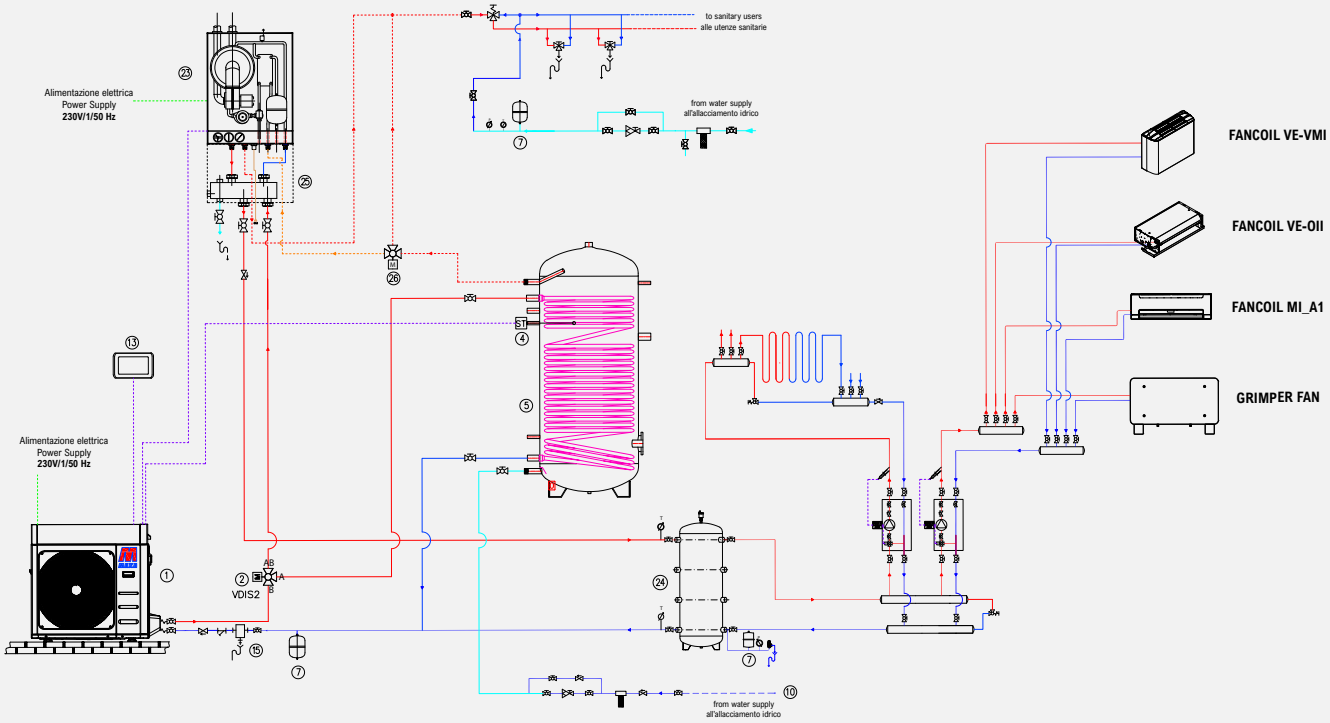


Purely indicative and non-binding diagram; for the construction of the system, it is necessary to refer to a design prepared by a qualified technician.

# Calido 105

## Wall-hung heat pump water heater with eco-friendly R290 refrigerant gas

105 liters

Wall-mounted heat pump water heater with eco-friendly R290 refrigerant, designed to combine energy efficiency, sustainability and ease of use.
Designed for wall installation, it features a 105-litre tank that combines compact dimensions with a refined design, making it ideal for domestic environments. Thanks to the integrated Wi-Fi connectivity, it can be managed remotely at any time via smartphone, allowing temperature control, timer programming and activation of the anti-legionella function with maximum convenience.

| R290 | 65°C | 70°C | A++ | | | | |
|---|---|---|---|---|---|---|---|
| REFRIGERANT 0.02 GWP | OUTLET WATER Supply Temperature | ANTI-LEGIONELLA CYCLE BY DEFAULT | ENERGY EFFICIENCY CLASS | DOMESTIC HOT WATER | STANDARD WI-FI | APP AVAILABLE Smart Life | OPERATING TEMPERATURE -5/+43°C |

The storage tank is made of vitreous enamelled steel, insulated with rigid polyurethane foam (PU). The condenser, not immersed in water, is wound around the steel tank. The rotary compressor ensures maximum efficiency and quiet operation. The centrifugal fan allows ducting of the air required for correct heat pump operation. Access to the coil is facilitated by the dedicated compartment. Excellent performance is achieved even with outdoor temperatures ranging from -5°C to +43°C, also thanks to the electronic expansion valve, which further enhances performance.

### Construction Features

- **Refrigerant fluid R290.**
- **Remote device management via Wi-Fi.**
- Boiler with a water capacity of 105 liters, made of S235 JR steel with internal vitreous enamel treatment and high-thickness rigid polyurethane foam (PU) insulation, free of CFCs and HCFCs.
- External casing in sheet metal painted with epoxy powders (white color).
- Anchor brackets for wall installation.
- Magnesium anode for corrosion protection.
- Hydraulic fittings positioned at the bottom.
- Microchannel condenser wound around the steel storage tank (not immersed in water).
- Built-in 1.5 kW 230V~ electric heater that can be activated via a control located on the control panel to heat the water from 65°C (maximum temperature with the heat pump only) up to 70°C.
- Rotary compressor for maximum unit efficiency and quiet operation.
- Centrifugal fan for ducting the air required for the correct operation of the heat pump.
- Finned coil evaporator.
- Defrost function easily managed via hot-gas bypass.
- Safety thermostat set to +85°C.
- ON-OFF contact for starting the unit from an external switch.

Electronic controller equipped with control panel complete with LCD touch display, water temperature indicator, operation indicator lights for the heat pump and electric heater, controls with indicators for activating the different operating modes, and indications of any malfunctions/ alarms, in particular:

- Anti-Legionella function
- Setting / viewing time and day
- Hot water temperature setpoint.

## Accessories

### Standard supply

- Dielectric joints.
- Magnesium anode for corrosion protection.
- Bracket for wall mounting.
- Fixing screws and wall plugs.
- Spacers for wall mounting.
- Safety valve 8 bar.

### Provided separately

- **AG** - Anti-vibration kit for floor installation.

| | | | |
|---|---|---|---|
| Calido 105 | Energy class | | A++ |
| | Power supply | V/Ph/Hz | 220-240/1Ph+N+PE/50 |
| | Actual tank capacity | L | 103.9 |
| | Heating capacity | W | 1000* (+1500**) |
| | Power input | W | 210* (+1500**) |
| | Rated current | A | 1.03 (+6.5**) |
| | COP DHW*** | W/W | 3.16 |
| | COP DHW**** | W/W | 3.73 |
| | Maximum absorption | W | 330* (+1500**) |
| | Maximum current | A | 1.67* (+6.5**) |
| | Heating time with cold tank (*) | h:min | 6:52 |
| | Maximum water outlet temperature (without using the heater) | °C | 65 |
| | Maximum water temperature | °C | 70** |
| | Minimum water start-up temperature | °C | 10 |
| | Working ambient temperature | °C | -5 ~ +43 |
| | Maximum refrigerant discharge pressure | bar | 32 |
| | Maximum refrigerant suction pressure | bar | 12 |
| | Refrigerant type | | R290 |
| | Charge refrigerant | g | 140 |
| | Compressor | Type | Rotary |
| | | Oil | PAG or equivalent, 170 ml |
| | Fan motor | Type | DC |
| | | W | 45 |
| | | RPM | 900 |
| | Nominal flow rate | m³/h | 270 |
| | Available static pressure | Pa | 60 |
| | Duct diameter | mm | 125 |
| | Maximum allowable tank pressure | bar | 10 |
| | Internal tank surface material | | S235JR with double-layer vitrification |
| | Auxiliary electric heater | Kw | 1.5 |
| | Electronic expansion valve | | yes |
| | Magnesium anode | | yes |
| | Heat pump heat exchanger material (condenser) | | aluminum alloy |
| | Cold water inlet | inch | G 1/2" male |
| | Hot water outlet | inch | G 1/2" male |
| | Condensate water outlet | | Plastic flexible hose φ18 mm |
| | Condensate drain | inch | For external installation |
| | IP protection class | | IPX1 |
| | Net size | mm | 500x520x1406 |
| | Packing dimensions | mm | 550x550x1460 |
| | Net weight | Kg | 72 |
| | Weight with water-filled tank | Kg | 182 |
| | Gross weight | Kg | 84 |
| | Sound power (2) | dB (A) | 45 |
| | Sound pressure (3) | dB (A) | 30.2 |

* Heating capacity and power input measured under the following conditions: room temperature 20°C, water temperature from 15°C to 55°C (data obtained from internal laboratory tests on uniform reheating of the storage tank temperature).
** In relation to the auxiliary heater. During the disinfection cycle, the temperature is raised to 70°C by the auxiliary heater.
*** Obtained with the tank stored at an ambient temperature of 20°C, with ducted air inlet at 7°C and all other parameters in accordance with EN 16147.
**** According to EN 12102: ducted unit in/out 2 m.
***** Heat loss value of the tank alone, with ambient temperature at 20°C and stored water at 65°C.
(1) rating data referring to integration with boiler in accordance with DIN 4708 standards (primary 80/60°C, secondary 10/45°C).
(2) measured according to standard EN 12102 under the conditions specified in standard EN 16147.
(3) calculated according to ISO 3744:2010 algorithm at 1 m from the unit.

## Calido 105 Operating Areas

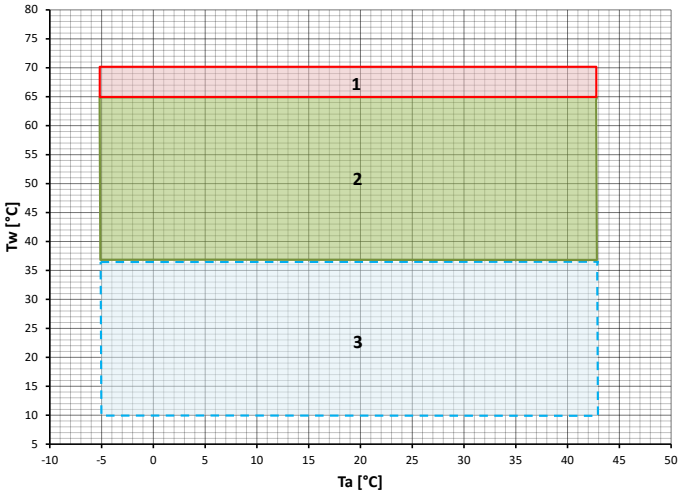


Tw: water temperature - Ta: outdoor air temperature
1. Integration region with electric resistance only
2. Operating range of heat pump and heater (depending on the selected settings)
3. Expected water loading temperature in the tank (minimum 10°C)

## Dimensional Drawings

Calido 105

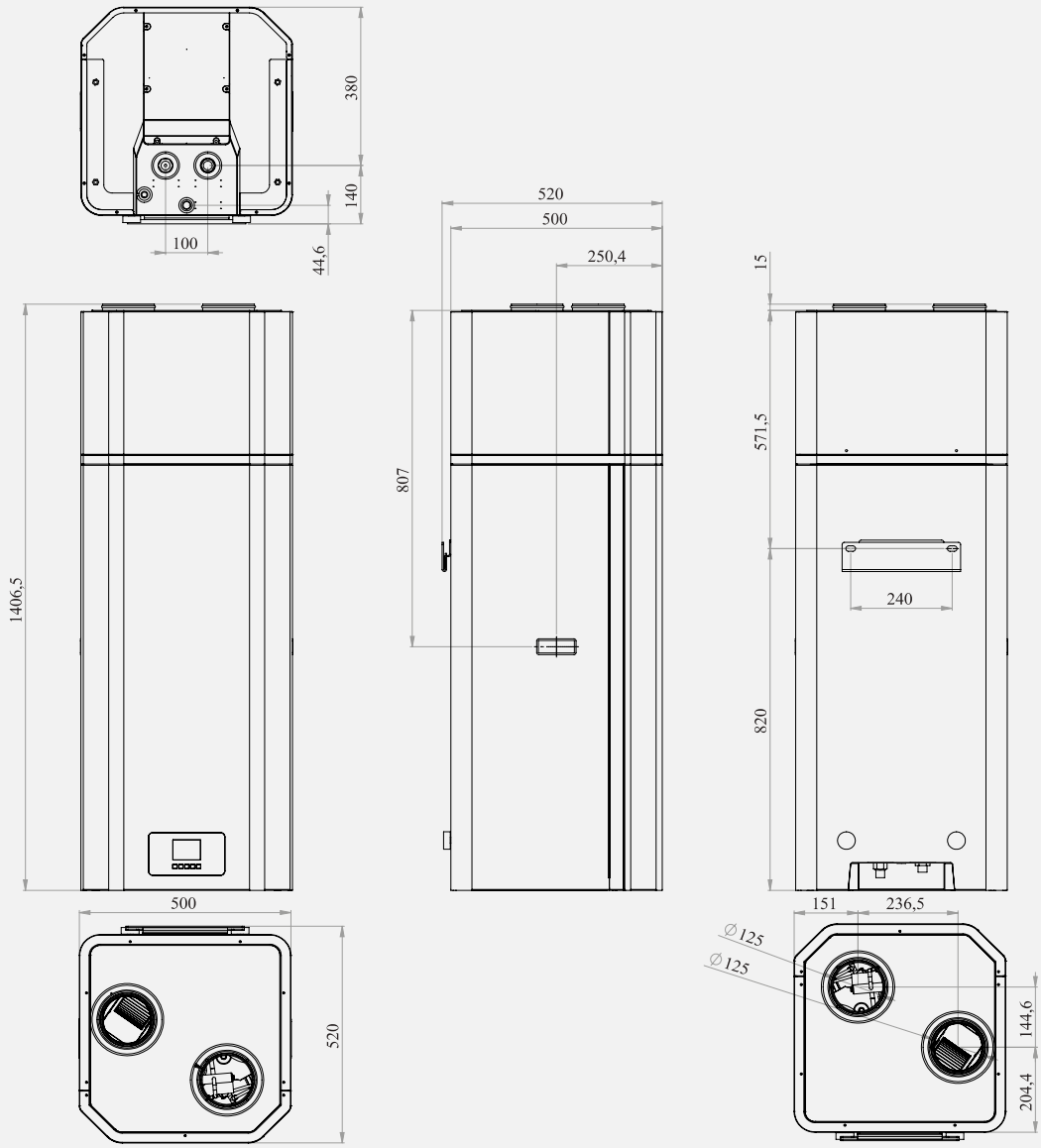


Dimensions in mm

## System Diagram - Standard Application

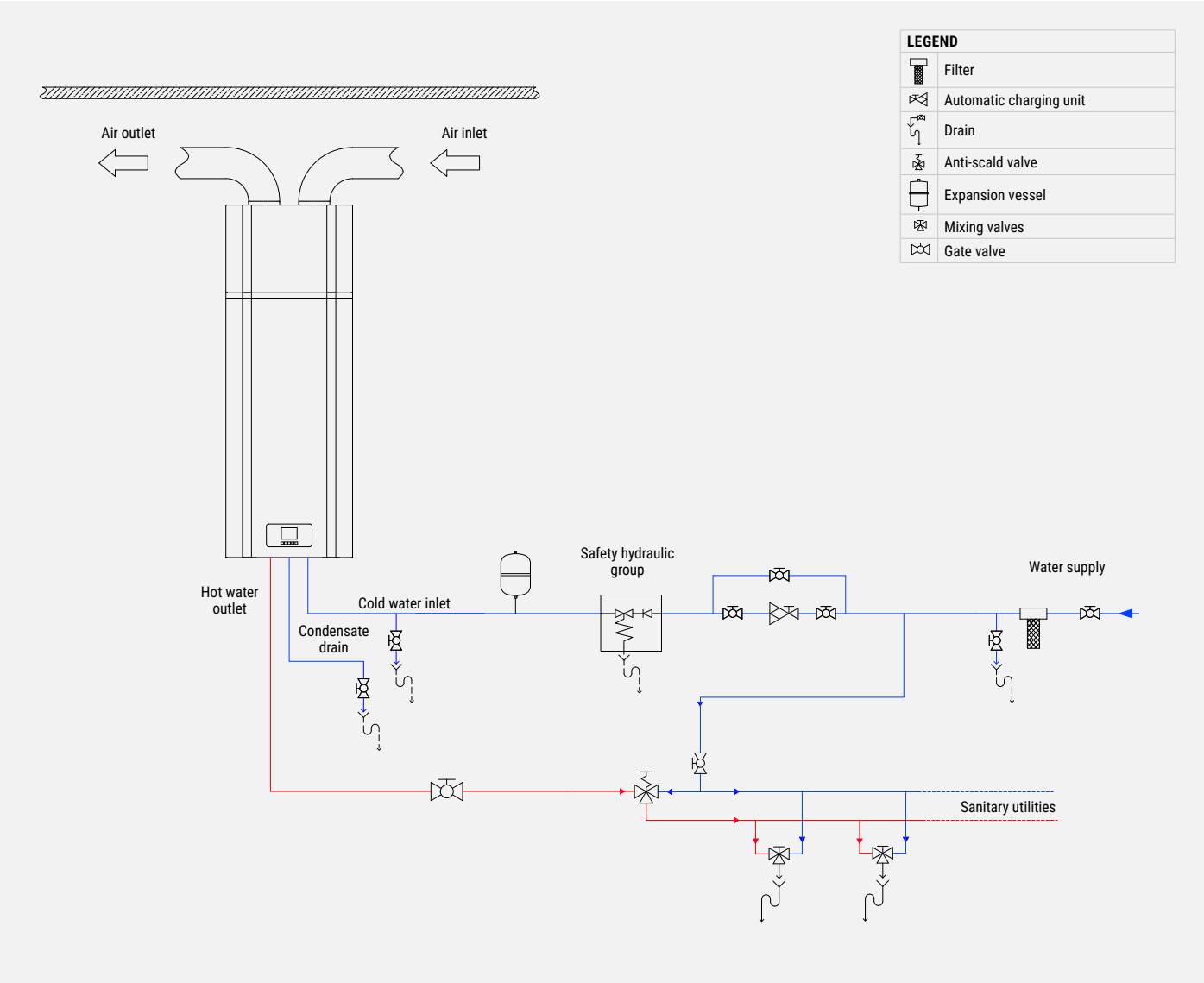


## Price list

| | | 105 |
|---|---|---|
| Calido | code | 0100124#601 |
| | € | 1.854 |

NEW

| ACCESSORIES SUPPLIED SEPARATELY | | | |
|---|---|---|---|
| | | Code | € |
| AG | Anti-vibration mounts for floor installation | 015908#010054 | 156 |

# Calido 190/250

## Heat pump water heater with eco-friendly R290 refrigerant

190–250 litres

System that exploits the high efficiency of the air-to-water heat pump with eco-friendly R290 refrigerant, a sustainable choice that reduces environmental impact while ensuring maximum energy efficiency. The installation flexibility allows it to be placed both in technical rooms and in secondary areas of the home such as garages or laundry rooms; thanks to its refined, elegant design, it also blends seamlessly into living spaces. The Calido-S version allows integration with solar thermal panels, further expanding the possible applications in terms of energy savings and sustainability.

| | | | | | | | |
|---|---|---|---|---|---|---|---|
| R290 REFRIGERANT 0.02 GWP | 65°C OUTLET WATER Supply Temperature | 70°C ANTI-LEGIONELLA CYCLE BY DEFAULT | A+ ENERGY EFFICIENCY CLASS | DOMESTIC HOT WATER | STANDARD WI-FI | APP AVAILABLE Smart Life | OPERATING TEMPERATURE -10/+43°C |

Google play
App Store

### Construction Features

- **Remote device management via Wi-Fi.**
- **High-efficiency compressor with R290 refrigerant.**
- Carbon steel tank with double-layer enameling.
- Anti-corrosion magnesium anode to ensure tank durability.
- Microchannel condenser wound externally around the boiler, free from scaling and gas-water contamination.
- High-thickness thermal insulation in expanded polyurethane (PU).
- Outer cladding in grey plastic material.
- Acoustically insulated upper plastic cover.
- Gas low-pressure safety devices.
- Defrost function easily managed via hot-gas bypass.
- Electric heater available in the unit as back-up (with integrated safety thermostat set to 85°C), ensuring hot water at a constant temperature even under extreme winter conditions.
- ON-OFF contact for starting the unit from an external switch
- Weekly disinfection cycle.
- Possibility to manage domestic hot water recirculation or solar integration (presence of a dedicated temperature probe, flow switch input, and control for an external pump).
- Electronic expansion valve for precise control.

### Advantages:

- The effective setpoint of the heat pump is controlled by a climatic curve to prevent high-pressure alarms from occurring when warm outdoor air is drawn in (above 25°C with water at 65°C, above 35°C with water at 55°C).
- The electric heater automatically integrates the tank temperature to the desired setpoint if the actual setpoint is being controlled by the climatic compensation curve.
- Provision for integration with photovoltaic system. When enabled by the photovoltaic inverter, the temperature setpoint is raised to the highest possible value (compatible with weather-compensated control).

### Flexibility and benefits:

- Heat recovery: the unit can be installed near the kitchen, in the utility room or in the garage. Practically in any room with a considerable amount of waste heat, so that it achieves high energy efficiency even at very low outdoor temperatures.
- Domestic hot water, cooling and dehumidification: the unit can be installed in a laundry room, garage, gym or basement. While producing domestic hot water, it cools and dehumidifies the room.
- Compatible with solar thermal: the unit can operate with a second energy source such as solar panels.
- The sole function for which the unit has been designed is that of a heat pump for the production of domestic hot water. Any other secondary effect (cooling, dehumidification, recovery of waste heat) must be regarded as an ancillary benefit. Performance data are therefore provided only with reference to the water heating function.

## Accessories

### Provided separately

- **ONE-SAS** - Solar/DHW T6 temperature sensor. If there is the option to recirculate solar integration water or domestic hot water, the optional T6 probe must be connected to the electrical box together with the flow switch and correctly positioned on the hydraulic system.

## Versions

- CALIDO: standard that includes a heat pump and an electric heater.
- CALIDO-S: with auxiliary coil for use in combination with solar panels.

| | | | CALIDO 190 | CALIDO 250 | CALIDO 190-S | CALIDO 250-S |
|---|---|---|---|---|---|---|
| Calido 190 - 250 | Energy class | | A+ | | | |
| | Power supply | V/Ph/Hz | 220-240/1Ph+N+PE/50 | | | |
| | Actual tank capacity | L | 196 | 256 | 190 | 250 |
| | Heating capacity | W | 1500* (+1200**) | | | |
| | Power input | W | 365* (+1200**) | | | |
| | Rated current | A | 1.69* (+5.2**) | | | |
| | COP DHW*** | W/W | 3.2 | 3.4 | 3.2 | 3.4 |
| | COP DHW**** | W/W | 3.85 | 4.19 | 3.85 | 4.19 |
| | Maximum absorption | W | 700* (+1200**) | | | |
| | Maximum current | A | 9.6* (+5.2**) | | | |
| | Heating time with cold tank (*) | h:min | 7:56 | 10:56 | 7:56 | 10:56 |
| | Maximum water outlet temperature (without using the heater) | °C | 65 | | | |
| | Maximum water temperature | °C | 70** | | | |
| | Minimum water start-up temperature | °C | 10 | | | |
| | Working ambient temperature | °C | -10 ~ +43 | | | |
| | Maximum refrigerant discharge pressure | bar | 32 | | | |
| | Maximum refrigerant suction pressure | bar | 12 | | | |
| | Refrigerant type | | R290 | | | |
| | Charge refrigerant | g | 150 | | | |
| | Compressor | Type | Rotary | | | |
| | | Oil | PAG or equivalent | | | |
| | Fan motor | Type | DC | | | |
| | | W | 45 | | | |
| | | RPM | 900 | | | |
| | Nominal flow rate | m³/h | 290 | | | |
| | Available static pressure | Pa | 60 | | | |
| | Duct diameter | mm | 160 | | | |
| | Maximum allowable tank pressure | bar | 10 | | | |
| | Internal tank surface material | | S235JR with double-layer vitrification | | | |
| | Tank transmittance (kboll) ***** | W/K | 1.73 | 2 | 1.73 | 2 |
| | Auxiliary electric heater | Kw | 1.2 | | | |
| | Electronic expansion valve | | yes | | | |
| | Magnesium anode | | yes | | | |
| | Heat pump heat exchanger material (condenser) | | aluminum alloy | | | |
| | Solar heat exchanger coil surface | m2 | / | | 0.8 | |
| | Solar heat exchanger coil flow rate (1) | m³/h | / | | 1.2 | 1.2 |
| | Maximum heat exchanger coil pressure | bar | / | | 6 | |
| | Coil heat exchange material | | S235JR | | | |
| | Cold water inlet | inch | G 1" female | | | |
| | Hot water outlet | inch | G 1" female | | | |
| | Solar integration input/output | inch | / | | G 1" female | |
| | Condensate water outlet | | Plastic flexible hose 0.3 m φ22 mm | | | |
| | Condensate drain | inch | For external installation | | | |
| | IP protection class | | IPX1 | | | |
| | Net size | mm | φ655x1504 | φ655x1713 | φ655x1504 | φ655x1713 |
| | Packing dimensions | mm | 690x690x1844 | | | |
| | Net weight | Kg | 106 | 114.5 | 114 | 122.5 |
| | Weight with water-filled tank | Kg | 302 | 371 | 310 | 379 |
| | Gross weight | Kg | 112 | 120.5 | 120 | 128 |
| | Sound power (2) | dB (A) | 49 | | | |
| | Sound pressure (3) | dB (A) | 33.5 | | | |

* Heating capacity and power input measured under the following conditions: room temperature 20°C, water temperature from 15°C to 55°C (data obtained from internal laboratory tests on uniform reheating of the storage tank temperature).
** In relation to the auxiliary heater. During the disinfection cycle, the temperature is raised to 70°C by the auxiliary heater
*** Domestic hot water heating energy efficiency based on ErP regulation (EN 16147), profile L (190 L) and XL (250 L), ambient temperature 7 °C / 6 °C, water temperature from 10 °C to 55 °C (SCOP DHW).
**** Water heating energy efficiency based on ERP regulation (EN 16147), L profile (190 l) and XL profile (250 l), ambient temperature 14°C / 12°C, water temperature from 10°C to 55°C.
***** Referred to the tank installed at an ambient temperature of 20°C and storage with water at 65°C.
(1) rating data referring to integration with boiler in accordance with DIN 4708 standards (primary 80/60°C, secondary 10/45°C).
(2) measured according to standard EN 12102 under the conditions specified in standard EN 16147.
(3) calculated according to ISO 3744:2010 algorithm at 1 m from the unit.

## Operating Areas Calido 190/250

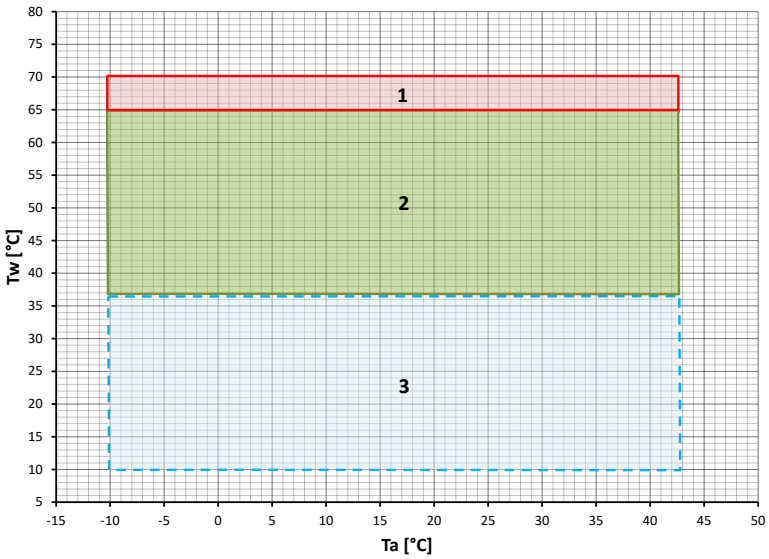


Tw: water temperature - Ta: outdoor air temperature
1. Integration region with electric resistance only
2. Operating range of heat pump and heater (depending on the selected settings)
3. Expected water loading temperature in the tank (minimum 10°C)

## Dimensional Drawings Calido 190/250

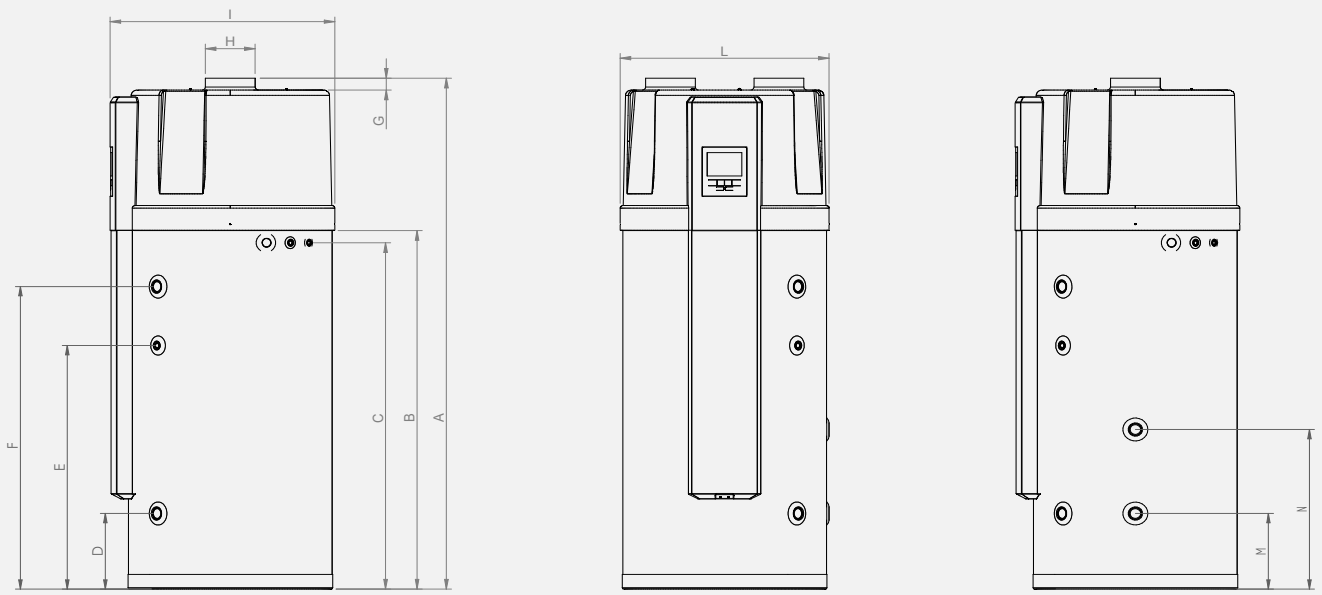


| | CALIDO 190 | CALIDO 250 | CALIDO 190-S | CALIDO 250-S |
|---|---|---|---|---|
| A | 1524 | 1524 | 1734 | 1734 |
| B | 1008 | 1008 | 1218 | 1218 |
| C | 969 | 969 | 1176 | 1176 |
| D | 257 | 257 | 257 | 257 |
| E | 542 | 542 | 827 | 827 |
| F | 817 | 817 | 1027 | 1027 |
| G | 40 | 40 | 40 | 40 |
| H | Ø 156 | Ø 156 | Ø 156 | Ø 156 |
| I | 704 | 704 | 704 | 704 |
| L | Ø 655 | Ø 655 | Ø 655 | Ø 655 |
| M | - | 257 | - | 257 |
| N | - | 542 | - | 542 |

Dimensions in mm

# Installation Diagram

| LEGEND | |
|---|---|
| | Mixing valve |
| | Manual valve |
| | Non-return valve |
| | Y-strainer |
| | Expansion vessel |
| | Automatic loading unit |
| | Temperature sensor |
| | Safety valve (3 bar) |
| | Ventilation outlet |
| | Thermal safety valve (85°C) |
| | Circulator |

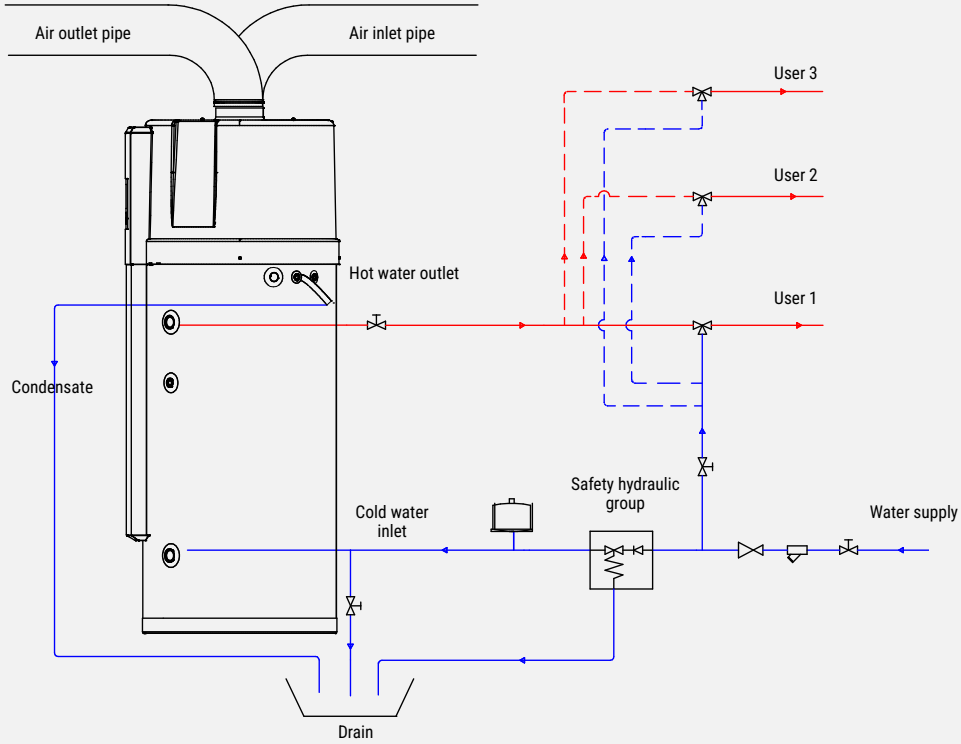


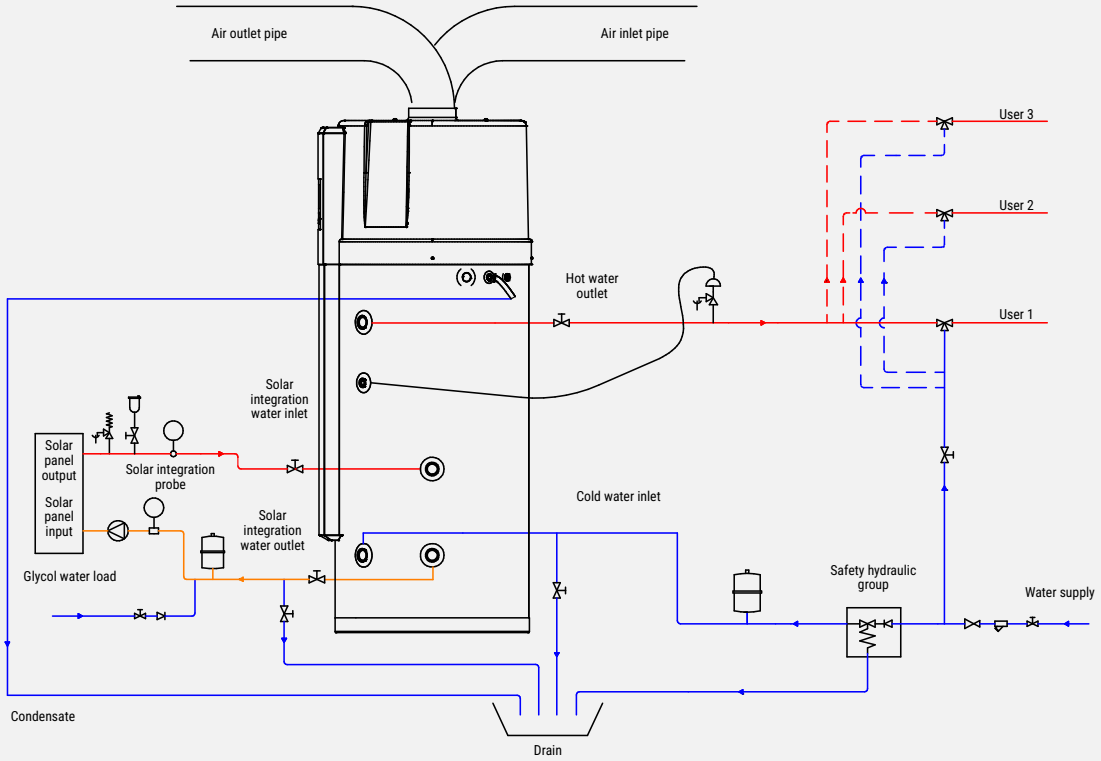


Installation diagram in case of solar integration water recirculation
Note: the solar integration coil is present on the CALIDO-D and CALIDO-S models for the 200/300 version (R134A refrigerant gas), and only on the CALIDO-S model for the 190/250 version (R290 refrigerant gas).

## Price list

| | | 190 NEW | 190-S NEW | 250 NEW | 250-S NEW |
|---|---|---|---|---|---|
| Calido | code | 0111025#0100210101 | 0111025#0200210101 | 0111025#0300210101 | 0111025#0400210101 |
| | € | 2.832 | 3.038 | 2.935 | 3.193 |

| ACCESSORIES SUPPLIED SEPARATELY | | Code | € |
|---|---|---|---|
| ONE-SAS | Solar/DHW temperature sensor T6 | CM-0105 | 70 |

# Puffroller & PuffrollerOut

## Storage tank for hot and cold technical water

60÷1400 L

Designed to ensure maximum versatility and reliability: it can be integrated into any type of system and guarantees rapid storage with abundant, continuous delivery. Thanks to its high efficiency, it offers low operating costs while at the same time ensuring absolute hygiene and long service life with no risk of corrosion. Installation is simple, facilitated by an untreated interior and by specific mounting points for wall installation on the 60, 120 and 200 litre models, which can also be installed either horizontally or vertically. The 50 mm polyurethane foam insulation ensures excellent thermal performance, while the provision for the insertion of an auxiliary electric heating element further extends its functionality.

## Accessories

### Provided separately

- **RE1.5M3**: Single-phase electric heater 1.5 kW (L=340 mm) *
- **RE2.0M3**: Single-phase electric heater 2.0 kW (L=390 mm) *
- **RE3.0M3**: Single-phase electric heater 3.0 kW (L=390 mm) *
- **VE24AT**: 24 l expansion vessel for storage tanks with capacity up to 500 l
- **VEP35AT**: 35 l expansion vessel for storage tanks with a capacity from 800 to 1000 l

* Not for model 60-750-880-1400

### Versions

- **Puffroller**: For indoor installation only. Suitable for indoor installation, it ensures excellent energy performance, provided it is not exposed to weather conditions.
- **Puffroller-Out**: For indoor and outdoor installation. Suitable for both indoor and outdoor installation, thanks to the additional coating that protects the tank even when exposed to atmospheric agents.

| | | | 60 | 120 | 200 | 280 | 400 | 480 | 750 | 880 | 1400 |
|---|---|---|---|---|---|---|---|---|---|---|---|
| Puffroller PuffrollerOut | Total capacity | l | 57 | 123 | 203 | 277 | 399 | 473 | 732 | 855 | 1420 |
| | Insulation thickness | mm | 50 | 50 | 50 | 50 | 50 | 50 | 100 | 100 | 100 |
| | Total height with insulation | mm | 935 | 1100 | 1395 | 1560 | 1540 | 1840 | 1725 | 1975 | 2090 |
| | Diameter with Insulation | mm | 380 | 510 | 550 | 600 | 700 | 700 | 850 | 850 | 1060 |
| | Diameter with Insulation PuffrollerOut | mm | 500 | 600 | 650 | 700 | 800 | 800 | 990 | 990 | 1200 |
| | Curb weight | kg | 25 | 35 | 45 | 55 | 95 | 100 | 170 | 190 | 240 |
| | Maximum operating pressure in heating | bar | 6 | 6 | 6 | 6 | 6 | 6 | 6 | 6 | 6 |
| | Maximum operating temperature | °C | 95 | 95 | 95 | 95 | 95 | 95 | 95 | 95 | 95 |
| | Hydraulic connections | | 60 | 120 | 200 | 280 | 400 | 480 | 750 | 880 | 1400 |
| | Ventilation outlet | | 1" | 1" | 1" 1/4 | 1" 1/4 | 1" 1/4 | 1" 1/4 | 1" 1/4 | 1" 1/4 | 1" 1/4 |
| | Boiler flow | | 1" 1/4 | 1" 1/4 | 1" 1/2 | 2" | 2" 1/2 | 2" 1/2 | 3" | 3" | 4" |
| | Heating supply | | - | - | - | - | - | 2" 1/2 | 3" | 3" | 4" |
| | Boiler heating return | | 1" 1/4 | 1" 1/4 | 1" 1/2 | 2" | 2" 1/2 | 2" 1/2 | 3" | 3" | 4" |
| | Thermometer | | 1/2 | 1/2 | 1/2 | 1/2" | 1/2" | 1/2" | 1/2" | 1/2" | 1/2" |
| | Probe | | 1/2 | 1/2 | 1/2 | 1/2" | 1/2" | 1/2" | 1/2" | 1/2" | 1/2" |
| | Electric resistance | | 1" 1/2 | 1" 1/2 | 1" 1/2 | 1" 1/2 | 1" 1/2 | 1" 1/2 | 1" 1/2 | 1" 1/2 | 2" |
| | Drain | | 1/2 | 1/2 | 1/2 | 3/4" | 3/4" | 3/4" | 1" | 1" | 1" |

## Price list

| Puffroller | | 60 | 120 | 200 | 280 | 400 | 480 | 750 | 880 | 1400 |
|---|---|---|---|---|---|---|---|---|---|---|
| Puffroller | code | 01816#0000101 | 01816#0000201 | 01816#0000301 | 01816#0000401 | 01816#0000501 | 01816#0000601 | 01816#0000701 | 01816#0000801 | 01816#0000901 |
| | € | 751 | 891 | 1.199 | 1.395 | 1.560 | 1.727 | 2.468 | 2.627 | 3.736 |
| Puffroller Out | code | 01816#0007601 | 01816#0007101 | 01816#0007201 | 01816#0007301 | 01816#0007401 | 01816#0007501 | 01816#0007601 | 01816#0007701 | 01816#0007801 |
| | € | 899 | 1.071 | 1.438 | 1.674 | 1.874 | 2.074 | 2.959 | 3.153 | 4.483 |

| ACCESSORIES | | Code | € |
|---|---|---|---|
| RE1.5M3 | 1.5 kW single-phase electric heating element (length 340 mm) | 01816#0003101 | 213* |
| RE2.0M3 | 2 kW single-phase electric heating element (length 390 mm) | 01816#0003201 | 232* |
| RE3.0M3 | 3 kW single-phase electric heating element (length 390 mm) | 01816#0003301 | 257* |
| VE24AT | 24 l expansion vessel for storage tanks with capacity up to 500 l | 0119100033 | 121 |
| VEP35AT | 35 l expansion vessel for storage tanks with a capacity from 800 to 1000 l | 0119100034 | 232 |

* Accessory not available for size 60. It is necessary to add an adapter collar, to be provided by the installer, for sizes 750, 880, 1400.

## Dimensional Drawings

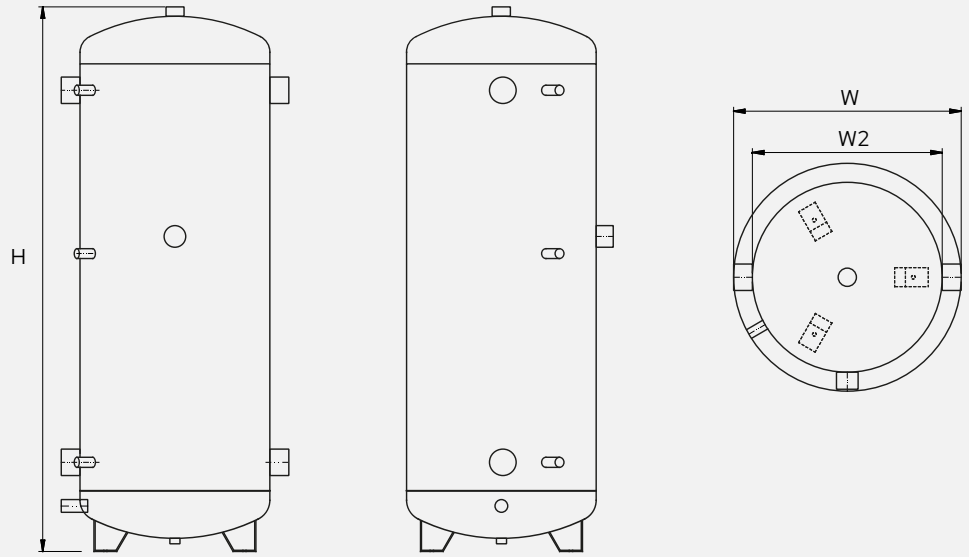


| | 60 | 120 | 200 | 280 | 400 | 480 | 750 | 880 | 1400 |
|---|---|---|---|---|---|---|---|---|---|
| H | 933 | 1.100 | 1.395 | 1.560 | 1.540 | 1.840 | 1.725 | 1.975 | 2.090 |
| W | 380 | 510 | 550 | 600 | 700 | 700 | 890 | 890 | 900 |
| W2 | 300 | 400 | 450 | 500 | 600 | 600 | 790 | 790 | 1000 |

Dimensions in mm

## Schematic Diagram

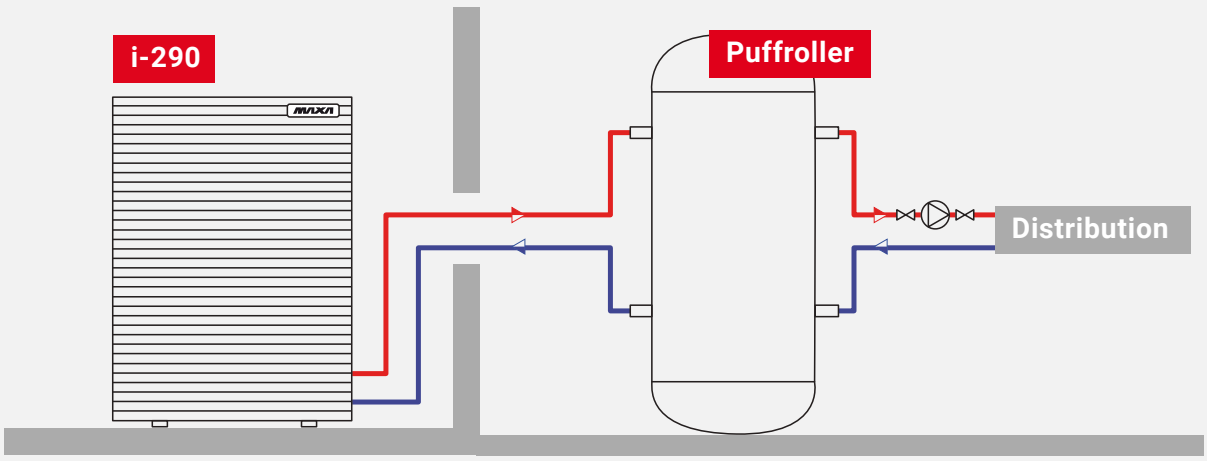


The booster circulation pump is not supplied by MAXA

# B-Puffroller

## Double buffer tank for technical water for domestic hot water production and system side

300/80-500/70 L

Integrated, compact solution designed to fit any type of system, ensuring rapid storage with abundant, continuous delivery. The high efficiency reduces operating costs while maintaining absolute hygiene and long service life with no risk of corrosion. Installation is straightforward thanks to the untreated internal structure and 50 mm polyurethane foam insulation, with the option to add an auxiliary electric heating element. In addition, the lower storage section allows the management of heating or chilled water, providing further versatility. For some versions, reinforced insulation in rigid polyurethane with a thickness of 70 mm is available, ensuring even higher thermal performance.

## Accessories

### Provided separately

- **RE1.5M3**: Single-phase electric heater 1.5 kW (L=340 mm)
- **RE2.0M3**: Single-phase electric heater 2.0 kW (L=390 mm)
- **RE3.0M3**: Single-phase electric heater 3.0 kW (L=390 mm)
- **VE24AT**: 24 l expansion vessel for storage tanks with capacity up to 500 l
- **VEP35AT**: 35 l expansion vessel for storage tanks with a capacity from 800 to 1000 l

| | | | 300 | 500 |
|---|---|---|---|---|
| B-Puffroller | Total capacity | l | 363 | 553 |
| | Insulation thickness | mm | 50 | 50 |
| | Total height with insulation | mm | 1940 | 2050 |
| | Diameter with Insulation | mm | 600 | 700 |
| | Curb weight | kg | 55 | 100 |
| | Maximum operating pressure in heating | bar | 6 | 6 |
| | Maximum operating temperature | °C | 95 | 95 |
| Lower tank | Buffer tank for heat pump | l | 80 | 70 |
| Upper tank | Connection type | | 300 | 500 |
| | Ventilation outlet | | 1" 1/4 | 1" 1/4 |
| | Boiler flow | | 2" | 2" 1/2 |
| | Heating supply | | - | 2" 1/2 |
| | Boiler-heating return at 50°C | | 2" | 2" 1/2 |
| | Boiler-heating return at 30°C | | 1/2" | 1/2" |
| | Thermometer | | 1/2" | 1/2" |
| | Probe | | 1/2" | 1/2" |
| | Electric resistance | | 1" 1/2 | 1" 1/2 |
| | Drain | | 3/4" | 3/4" |

## Price list

| B-Puffroller | | | 300 | 500 |
|---|---|---|---|---|
| B-Puffroller | Storage tank for hot and cold technical water | code | 01816#0004401 | 01816#0004601 |
| | | € | 2.749 | 3.121 |

| ACCESSORIES | | Code | € |
|---|---|---|---|
| RE1.5M3 | 1.5 kW single-phase electric heating element (length 340 mm) | 01816#0003101 | 213* |
| RE2.0M3 | 2 kW single-phase electric heating element (length 390 mm) | 01816#0003201 | 232* |
| RE3.0M3 | 3 kW single-phase electric heating element (length 390 mm) | 01816#0003301 | 257* |
| VE24AT | 24 l expansion vessel for storage tanks with capacity up to 500 l | 0119100033 | 121 |
| VEP35AT | 35 l expansion vessel for storage tanks with a capacity from 800 to 1000 l | 0119100034 | 232 |

## Dimensional Drawings

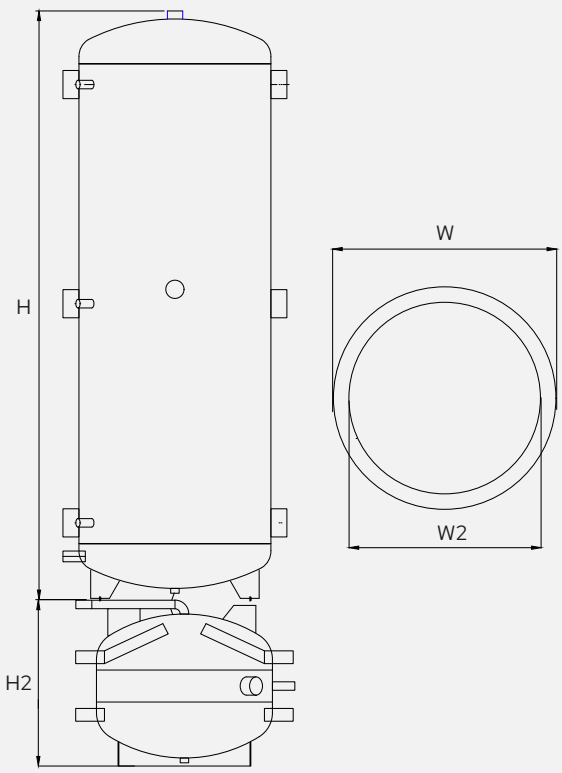


| | 300 | 500 |
|---|---|---|
| H | 1.560 | 1.840 |
| H2 | 505 | 505 |
| W | 600 | 700 |
| W2 | 500 | 600 |

Dimensions in mm

## Schematic Diagram

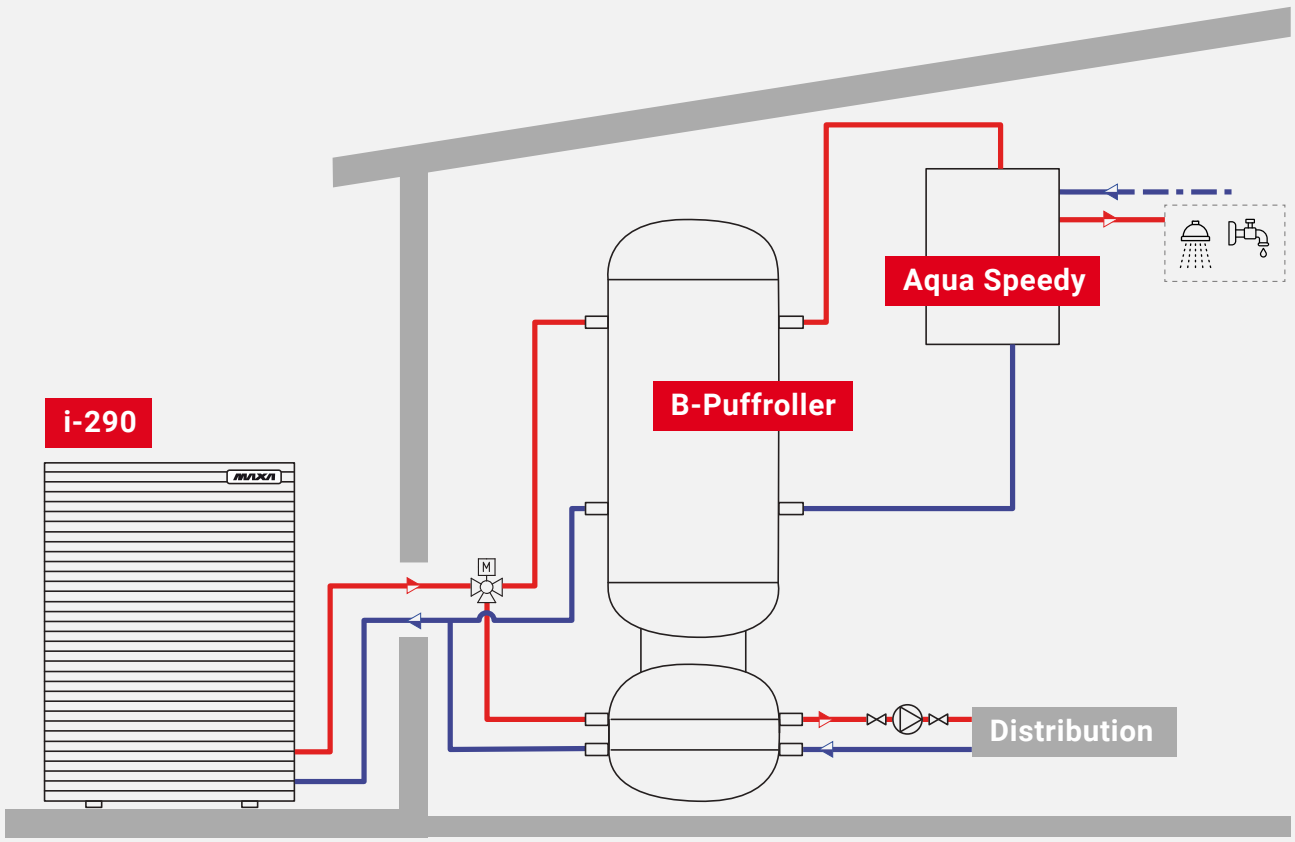


The booster circulation pump is not supplied by MAXA

# Caddy

## Buffer tank for heating water with stratifier and removable domestic hot water heat exchanger

300÷800 L

Innovative storage system designed for use with alternative energy sources and for instantaneous domestic hot water production. Its structure incorporates a domestic hot water coil located in the upper section and a low-position diffuser, thus ensuring optimal performance with various plant configurations. The 100 mm soft polyurethane insulation provides high energy efficiency, while the possibility of integration with solar thermal systems, condensing boilers, heat pumps or wood-fired boilers makes the system extremely versatile. Instantaneous domestic hot water production, combined with stratification via hydraulic chimney and a 4 m² copper coil, guarantees maximum performance, absolute hygiene and long-lasting durability.

## Accessories

### Provided separately

- **VE24AT**: 24 l expansion vessel for storage tanks with capacity up to 500 l
- **VEP35AT**: 35 l expansion vessel for storage tanks with a capacity from 800 to 1000 l

| | | | 300 | 500 | 800 |
|---|---|---|---|---|---|
| **Caddy** | Total capacity | l | 270 | 450 | 700 |
| | Insulation thickness | mm | 100 | 100 | 100 |
| | Total height with insulation | mm | 1625 | 1765 | 1780 |
| | Diameter with Insulation | mm | 700 | 850 | 990 |
| | Lower heat exchanger | m² | 1,9 | 2,5 | 2,5 |
| | Lower serpentine water content | l | 11,4 | 14,9 | 14,2 |
| | Power input | kW | 45 | 60 | 63 |
| | Curb weight | kg | 130 | 150 | 220 |
| | Maximum operating pressure in heating | bar | 3 | 3 | 3 |
| | Maximum operating temperature | °C | 95 | 95 | 95 |
| **Caddy Removable coil** | Heat exchanger surface | m² | 4,0 | | |
| | Water content of serpentine circuit | l | 2,8 | | |
| | Power input | kW | 80 | | |
| | Domestic hot water production | m³/h | 2,0 | | |
| | Pressure drops | mbar | 584 | | |
| | Coefficient (DIN 4708) | NL | 20 | | |

## Price list

| Caddy | | | 300 | 500 | 800 |
|---|---|---|---|---|---|
| Caddy | Buffer tank for heating water with stratifier and removable domestic hot water heat exchanger | code | 01816#0001001 | 01816#0001101 | 01816#0001201 |
| | | € | 3.343 | 3.983 | 5.140 |

| ACCESSORIES | | Code | € |
|---|---|---|---|
| VE24AT | 24 l expansion vessel for storage tanks with capacity up to 500 l | 0119100033 | 121 |
| VEP35AT | 35 l expansion vessel for storage tanks with a capacity from 800 to 1000 l | 0119100034 | 232 |

## Dimensional Drawings

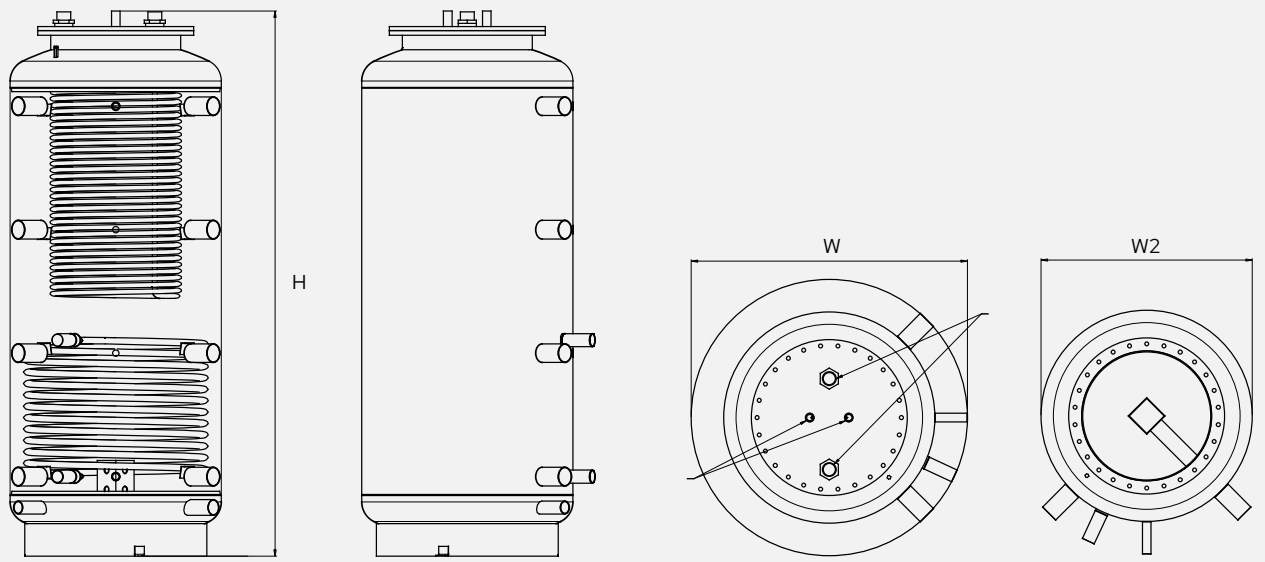


| | 300 | 500 | 800 |
|---|---|---|---|
| H | 1.580 | 1.678 | 1.778 |
| W | 700 | 850 | 990 |
| W2 | 500 | 650 | 790 |

Dimensions in mm

## Schematic Diagram

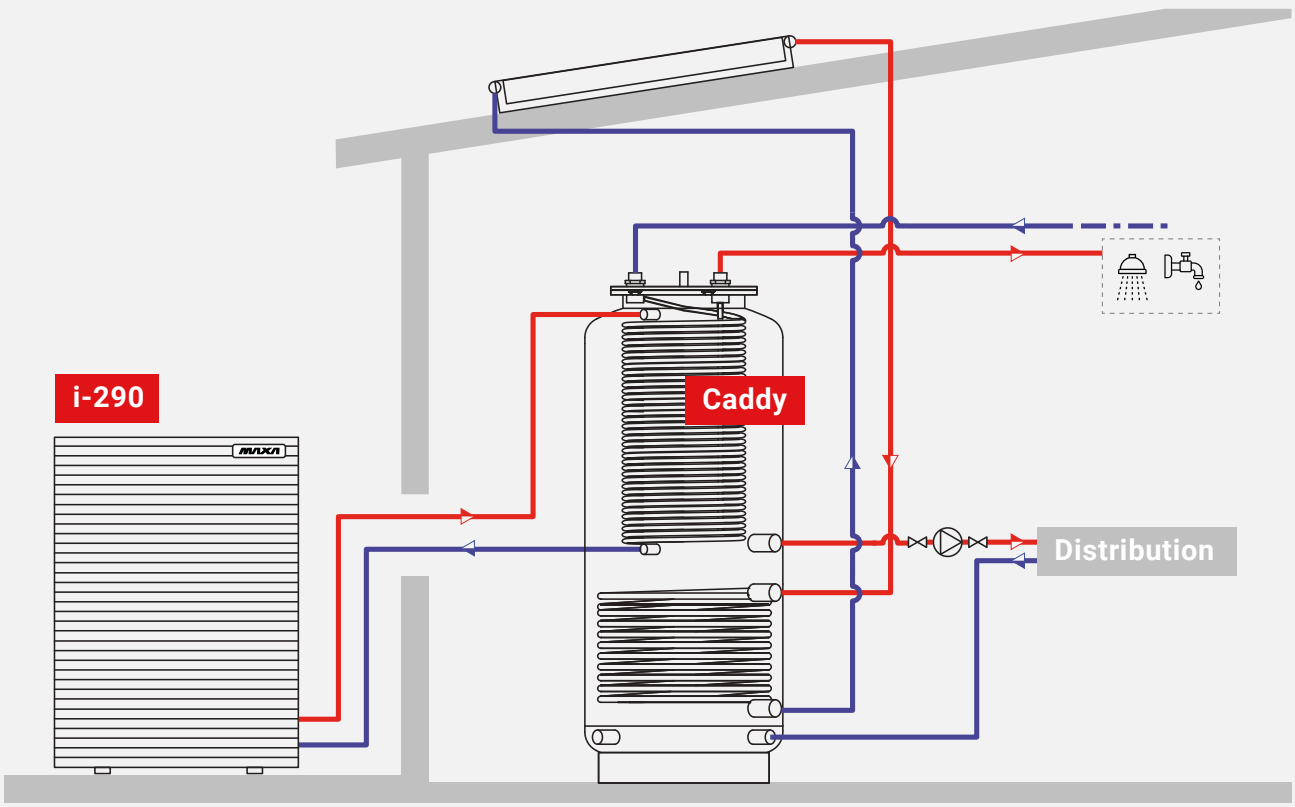

# Barrel

## DHW tank with internal treatment and coil for heat pump

300÷1000 L

Single-coil carbon steel storage tank, complete with anodic protection and internal treatment in accordance with DIN 4753 and UNI 10025 standards. Insulation: 50 mm rigid polyurethane (models 200–500), 100 mm soft polyurethane (models 800–1000). Designed to ensure rapid storage with abundant, continuous delivery, the system can be easily integrated into any type of plant, with low operating costs and long service life without risk of corrosion. The large heat exchange surface optimizes performance, while ease of installation and complete hygiene round out its advantages. The Barrel SE version is also available, equipped with a solar coil for greater integration with renewable energy sources.

## Accessories

### Provided separately

- **RE1.5M3**: Single-phase electric heater 1.5 kW (L=340 mm)
- **RE2.0M3**: Single-phase electric heater 2.0 kW (L=390 mm)
- **RE3.0M3**: Single-phase electric heater 3.0 kW (L=390 mm)
- **VAS**: Anti-scald valve
- **VE24AT**: 24 l expansion vessel for storage tanks with capacity up to 500 l
- **VEP35AT**: 35 l expansion vessel for storage tanks with a capacity from 800 to 1000 l

| | | | 200 | 300 | 500 | 800 | 1000 |
|---|---|---|---|---|---|---|---|
| Barrel | Total capacity | l | 190 | 263 | 470 | 702 | 900 |
| | Insulation thickness | mm | 50 | 50 | 50 | 100 | 100 |
| | Total height with insulation | mm | 1215 | 1615 | 1705 | 1810 | 2140 |
| | Diameter with Insulation | mm | 600 | 600 | 750 | 990 | 990 |
| | Heat exchanger | m2 | 3,0 | 4,0 | 6,0 | 7,0 | 8,0 |
| | Water content serpentine coil * | l | 17,2 | 23,0 | 51,5 | 60,0 | 68,5 |
| | Curb weight | kg | 120 | 160 | 220 | 280 | 320 |
| | Maximum pressure. | bar | 10 | | | | |
| | Maximum heat exchanger pressure | bar | 6 | | | | |
| | Maximum operating temperature | °C | 95 | | | | |
| Barrel SE | Total capacity | l | - | 260 | 455 | 702 | 900 |
| | Upper heat exchanger | m2 | - | 3,7 | 5,2 | 5,2 | 6,0 |
| | Water content serpentine coil * | l | - | 18 | 31 | 31 | 35 |
| | Curb weight | kg | - | 140 | 245 | 250 | 280 |
| | Lower heat exchanger | m2 | - | 1,2 | 1,8 | 2,4 | 3,7 |

* Check that the water contained in the coil is greater than the minimum water content required by the heat pump

## Price list

| Barrel | | | 200 | 300 | 500 | 800 | 1000 |
|---|---|---|---|---|---|---|---|
| Barrel | DHW tank with internal treatment and coil for heat pump | code | 01816#0001601 | 01816#0001701 | 01816#0001801 | 01816#0001901 | 01816#0002001 |
| | | € | 2.000 | 2.286 | 2.964 | 3.609 | 4.921 |
| Barrel SE | DHW cylinder with internal treatment and coil for heat pump and solar coil | code | - | 01816#0005701 | 01816#0005801 | 01816#0005901 | 01816#0006001 |
| | | € | - | 3.455 | 4.737 | 6.378 | 7.958 |

| ACCESSORIES | | Code | € |
|---|---|---|---|
| RE1.5M3 | 1.5 kW single-phase electric heating element (length 340 mm) | 01816#0003101 | 213 |
| RE2.0M3 | 2 kW single-phase electric heating element (length 390 mm) | 01816#0003201 | 232 |
| RE3.0M3 | 3 kW single-phase electric heating element (length 390 mm) | 01816#0003301 | 257 |
| VAS | Anti-scald valve | 0119100023 | 167 |
| VE24AT | 24 l expansion vessel for storage tanks with capacity up to 500 l | 0119100033 | 121 |
| VEP35AT | 35 l expansion vessel for storage tanks with a capacity from 800 to 1000 l | 0119100034 | 232 |

## Dimensional Drawings

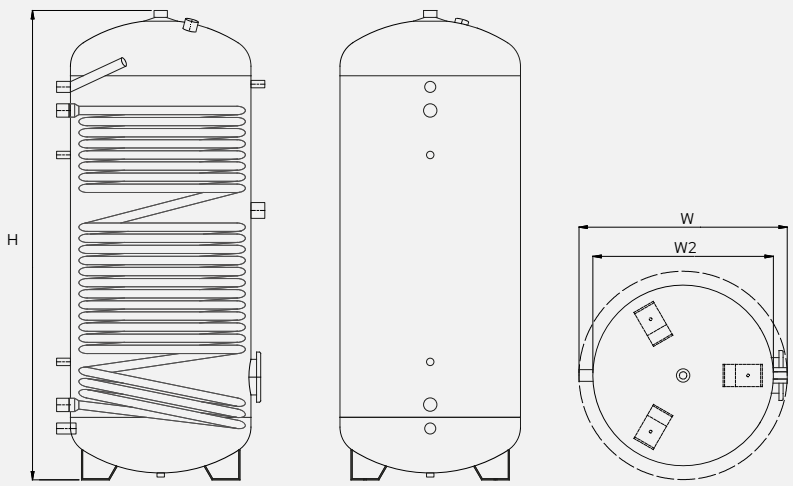


| | 200 | 300 | 300 SE | 500 | 500 SE | 800 | 1000 | 1000 SE |
|---|---|---|---|---|---|---|---|---|
| H | 1.215 | 1.615 | 1.615 | 1.690 | 1.690 | 1.790 | 2.040 | 2.140 |
| W | 600 | 600 | 590 | 750 | 740 | 990 | 990 | 990 |
| W2 | 500 | 500 | 500 | 650 | 650 | 790 | 790 | 790 |

Representation referring to models without a removable coil.

Dimensions in mm

## Schematic Diagram

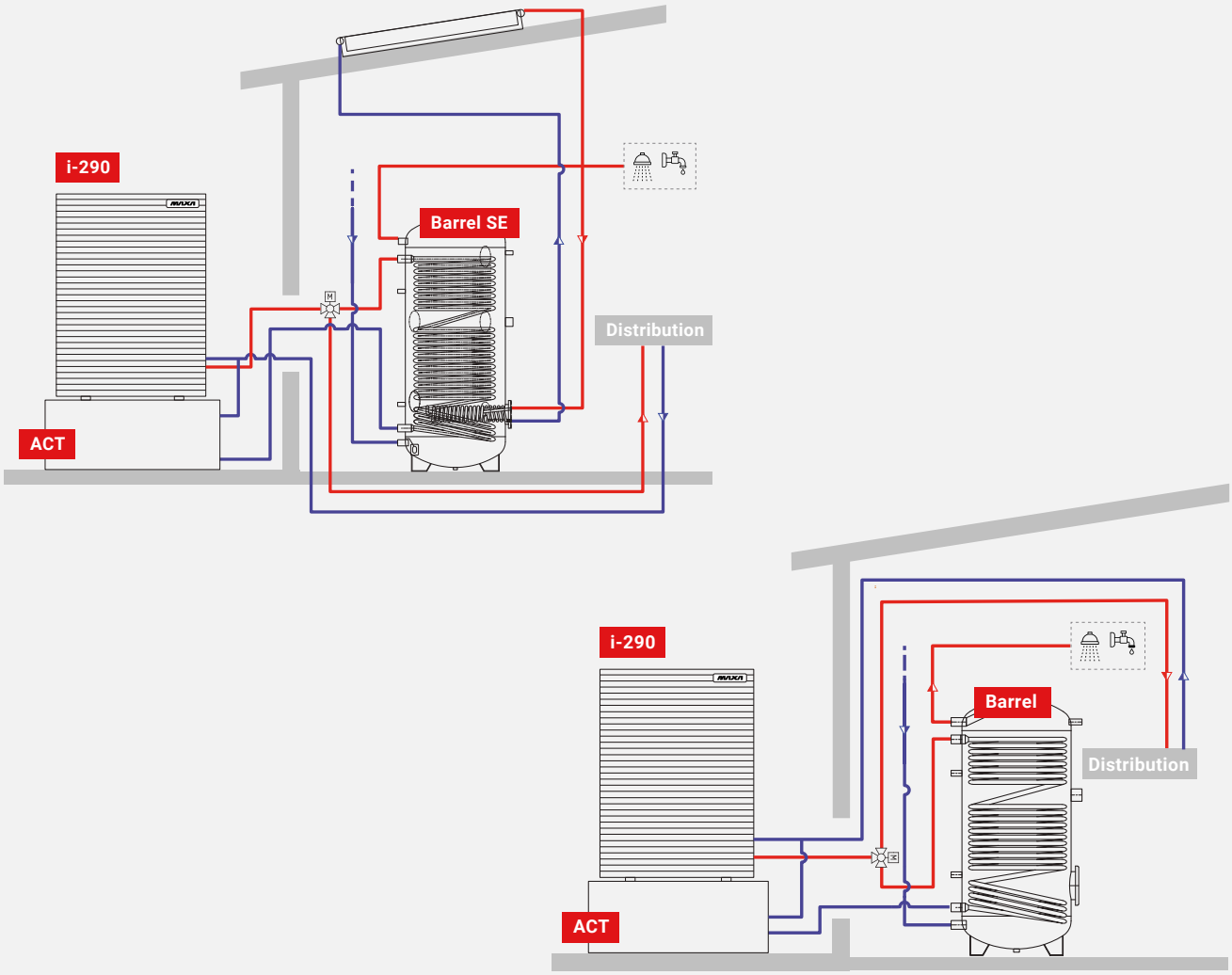

# Hybridroller

## Double DHW storage from heat pump and solar with thermal buffer for hot/chilled water

60÷500 L

This integrated, compact solution is designed to ensure maximum efficiency and practicality: it provides rapid storage capacity with abundant, continuous delivery and can be easily integrated into all types of systems. The large heat exchange surface optimizes performance, while the high efficiency keeps operating costs low. Designed to last over time with no risk of corrosion, it combines absolute hygiene, ease of installation, and a space-saving design that facilitates its use in any context.

## Accessories

### Provided separately

- **RE1.5M3**: Single-phase electric heater 1.5 kW (L=340 mm)
- **RE2.0M3**: Single-phase electric heater 2.0 kW (L=390 mm)
- **RE3.0M3**: Single-phase electric heater 3.0 kW (L=390 mm)
- **VAS**: Anti-scald valve
- **VE24AT**: 24 l expansion vessel for storage tanks with capacity up to 500 l
- **VEP35AT**: 35 l expansion vessel for storage tanks with a capacity from 800 to 1000 l

### Versions

- **H2**: Upper cylinder with more than 1 carbon steel coil, complete with anodic protection, internal treatment according to DIN 4763-3 and UNI 10025 standards. Lower storage for heating or chilled water, internal surface untreated. Insulation: 70 mm thick rigid polyurethane.
- **H2SE**: Upper tank with more than 2 coils in carbon steel, complete with anodic protection, internal treatment according to DIN 4763-3 and UNI 10025 standards. Lower storage section for heating or chilled water, untreated interior. Insulation: 70 mm thick rigid polyurethane.

| | | | H2 | | H2SE | |
|---|---|---|---|---|---|---|
| | | | **300** | **500** | **300** | **500** |
| **Hybridroller** | Diameter with insulation | mm | 690 | 790 | 690 | 790 |
| | Total Height | mm | 1925 | 2040 | 1925 | 2040 |
| | Unladen Weight | kg | 150 | 200 | 150 | 200 |
| | Effective Capacity | l | 270 | 460 | 270 | 450 |
| | Coil Operating Pressure | bar | 10 | 10 | 10 | 10 |
| | Tank Operating Pressure | bar | 10 | 10 | 10 | 10 |
| | Maximum Coil Temperature | °C | 110 | 110 | 110 | 110 |
| | Maximum Tank Temperature | °C | 95 | 95 | 95 | 95 |
| | Coil Surface | m2 | 3,3 | 6 | 2,8 | 4,4 |
| | Water Content of Coil * | l | 20,2 | 51,5 | 17 | 26,6 |
| | Nominal flow rate (60/50°C) | m³/h | 1,3 | 2,7 | 1,2 | 2 |
| | Output Power (60/50°C) | kW | 15 | 31 | 14 | 23 |
| | Domestic Hot Water Production (10/45°C) Din 4708 | m³/h | 0,37 | 0,76 | 0,34 | 0,57 |
| | Pressure Drop | mbar | 11 | 31 | 13 | 22 |
| | Buffer for Heat Pump | | 80 | 74 | 80 | 74 |
| | Buffer Tank Operating Pressure | bar | 6 | 6 | 6 | 6 |
| | Maximum Buffer Tank Temperature | °C | 95 | 95 | 95 | 95 |
| **Hybridroller Removable Coil** | Coil Surface | m2 | - | - | 0,9 | 1,5 |
| | Water Coil Content | l | - | - | 5,3 | 9,4 |
| | Heating Water (80/60°C) | m³/h | - | - | 0,9 | 1,6 |
| | Heating Water (60/50°C) | m³/h | - | - | 1,7 | 2,8 |
| | Output Power | kW | - | - | 20 | 32 |
| | Domestic Hot Water Production (10/45°C) Din 4708 | m³/h | - | - | 0,49 | 0,79 |
| | Pressure Drop | mbar | - | - | 26 | 42 |

* Check that the water contained in the coil is higher than the minimum water content required by the heat pump

## Price list

| Hybridroller | | | 300 | 500 |
|---|---|---|---|---|
| H2 | DHW tank with internal treatment | code | 01816#0002301 | 01816#0002401 |
| | | € | 4.542 | 5.850 |
| H2SE | DHW tank with internal treatment and removable coil | code | 01816#0002501 | 01816#0002601 |
| | | € | 5.220 | 6.668 |

| ACCESSORIES | | Code | € |
|---|---|---|---|
| RE1.5M3 | 1.5 kW single-phase electric heating element (length 340 mm) | 01816#0003101 | 213 |
| RE2.0M3 | 2 kW single-phase electric heating element (length 390 mm) | 01816#0003201 | 232 |
| RE3.0M3 | 3 kW single-phase electric heating element (length 390 mm) | 01816#0003301 | 257 |
| VAS | Anti-scald valve | 0119100023 | 167 |
| VE24AT | 24 l expansion vessel for storage tanks with capacity up to 500 l | 0119100033 | 121 |
| VEP35AT | 35 l expansion vessel for storage tanks with a capacity from 800 to 1000 l | 0119100034 | 232 |

## Dimensional Drawings

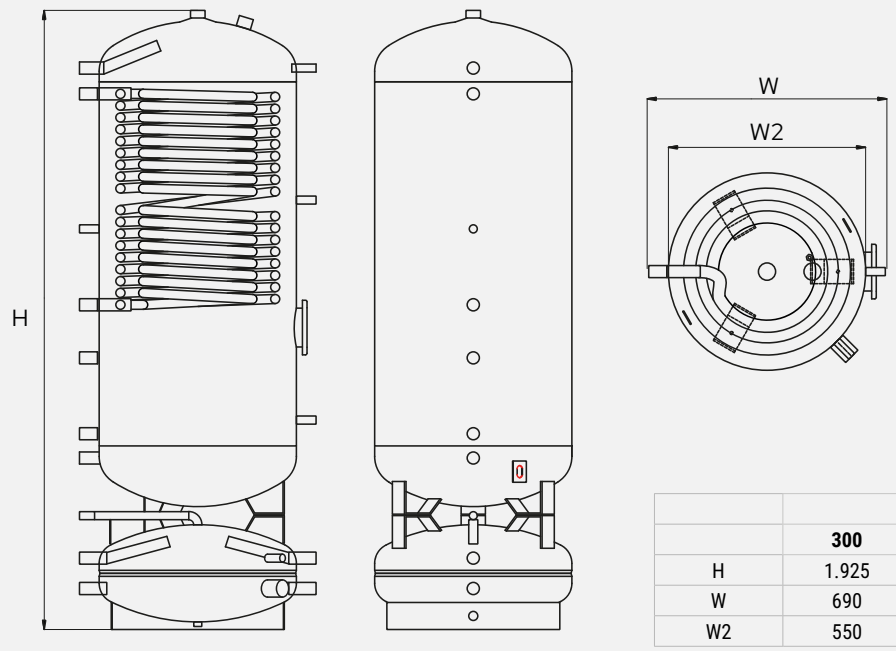


| | H2 | | H2SE | |
|---|---|---|---|---|
| | 300 | 500 | 300 | 500 |
| H | 1.925 | 2.040 | 1.925 | 2.040 |
| W | 690 | 790 | 690 | 790 |
| W2 | 550 | 650 | 550 | 650 |

Representation referring to model H2.

Dimensions in mm

## Schematic Diagram

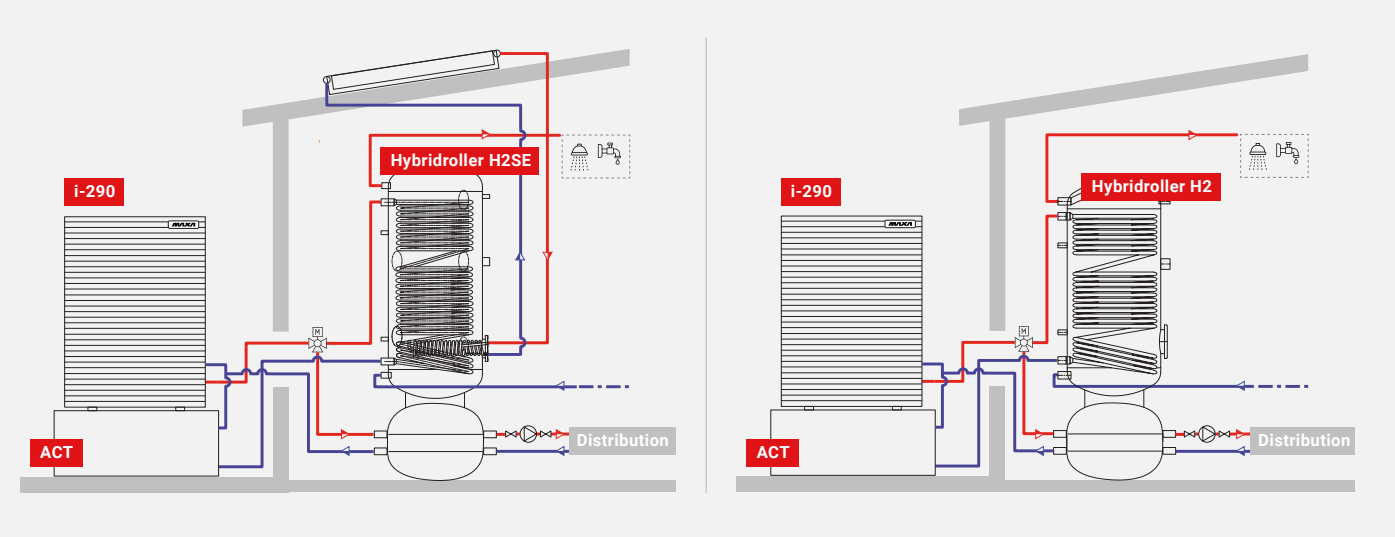


The booster circulation pump is not supplied by MAXA

# Hydrofull

## Hydronic modules for inverter heat pumps

The HydroFull range represents a complete and innovative solution, as it integrates all the main system components within a single enclosure, greatly simplifying the installation of heat pump systems.
The availability of 5 different models, with various types of domestic hot water storage and different sizes of buffer tanks, makes it possible to effectively meet a wide range of design requirements.
Domestic hot water production is provided by an AISI 316 L stainless steel tank, synonymous with high reliability and durability, available in two different capacities to suit various requirements.
Great attention has also been paid to installation flexibility: the different cabinet models allow both recessed installation in the wall and surface mounting, ensuring maximum versatility. Finally, the buffer storage is managed through standard or optional equipment that always ensures an adequate volume of technical water, optimizing the overall operation of the system.

**HydroFull is compatible with the i-32V5 range, models 06A, 08A, 10, 10T A, 12, 12T A, and the i-290 range, models 0106, 0109, 0112.**

## Accessories

### HydroFull-C - Supplied separately

- **CARTER**: Carter kit for side closure of cabinet to cover hydraulic connections in exposed installations
- **VE10C**: 10 L system expansion vessel kit
- **RE1.5M-R**: 1.5 kW electric heater complete with safety thermostat; operation is managed by the HP control electronics

### HydroFull-R - Supplied separately

- **BOX-R**: Cabinet for recessed or surface installation. Supplied disassembled.
- **RE1.5M-R**: 1.5 kW electric heater complete with safety thermostat; operation is managed by the HP control electronics

### HydroFull-L - Supplied separately

- **BOX-L-Z**: Zinc-plated recess-mount cabinet. Supplied disassembled
- **BOX-L-V**: Surface-mounted cabinet painted RAL 9016. Supplied disassembled
- **RE1.25M-L**: 1.25 kW electric heater, complete with safety thermostat, controlled by the HPU electronics

### HydroFull-X - Supplied separately

- **BOX-L-Z**: Zinc-plated recess-mount cabinet. Supplied disassembled
- **BOX-L-V**: Surface-mounted cabinet painted RAL 9016. Supplied disassembled
- **RE1.25M-L**: 1.25 kW electric heater, complete with safety thermostat, controlled by the HPU electronics
- **VE10AT**: 10 l expansion vessels for technical water storage

### HydroFull-Y - Supplied separately

- **BOX-L-Z**: Zinc-plated recess-mount cabinet. Supplied disassembled
- **BOX-L-V**: Surface-mounted cabinet painted RAL 9016. Supplied disassembled
- **RE1.25M-L**: 1.25 kW electric heater, complete with safety thermostat, controlled by the HPU electronics
- **VE10AT**: 10 l expansion vessels for technical water storage
- **KR-L** : Direct booster group with standard pump, 6 m head
- **K-MIX-L**: Mixed booster group (230V) with standard circulator, 6 m head

# Versions

## HydroFull-C

- **Cabinet**: white-painted for recessed or exposed installations (only 70 cm wide, 35 cm deep and 2.2 m high), with practical front opening for easy inspection and maintenance.
- **Boiler:** vertical stainless steel, 150-litre capacity, with high stratification and oversized coil with large heat exchange surface, with the option of integration with an electric heating element (optional).
- **Buffer** tank 20 liters.
- **Booster kit**: direct zone downstream of the hydraulic decoupler.
- **Hydraulic and electrical kit** for connection with heat pumps of the i-32V5 series and the i-290 series, including: 3-way valve with priority on the DHW side, 6-litre DHW expansion vessel, thermostatic mixing valve, system filling unit, booster circulator with 7 m head, hydraulic separator.

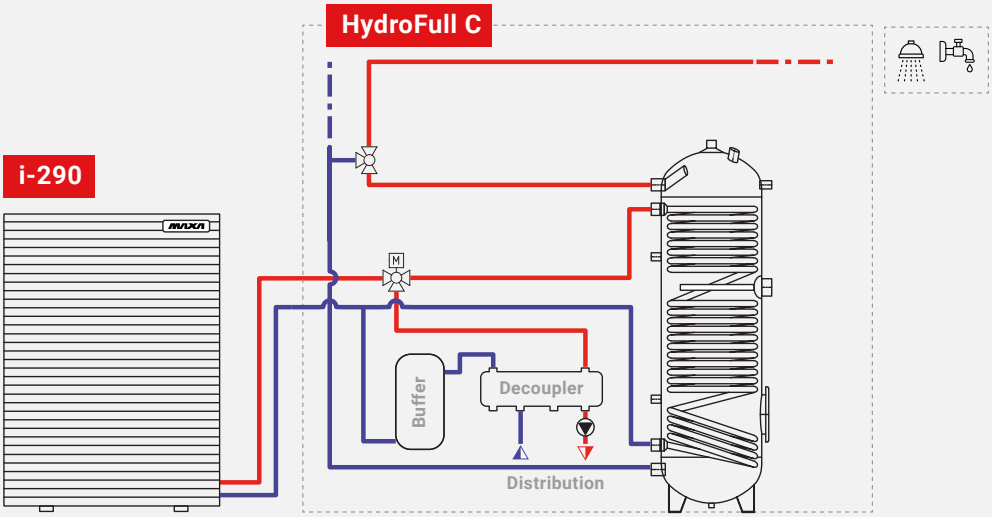


## HydroFull-R

- **Cabinet**: white painted, for recessed or exposed installations, with a practical front opening for simplified inspections and maintenance (accessory).
- **Storage tank**: vertical, in 316L stainless steel, high-stratification, with a capacity of 150 litres, with a single elliptical coil featuring a double concentric helix, providing 1.2 m² of surface area.
- **Hydraulic and electrical kit** including: 3-way valve with DHW priority, 20-litre buffer tank to optimise the modulation accuracy of the heat pump, thermostatic mixing diverting valve, 6-litre DHW expansion vessel, tap kit.

*All components are supplied in dedicated mounting kits.

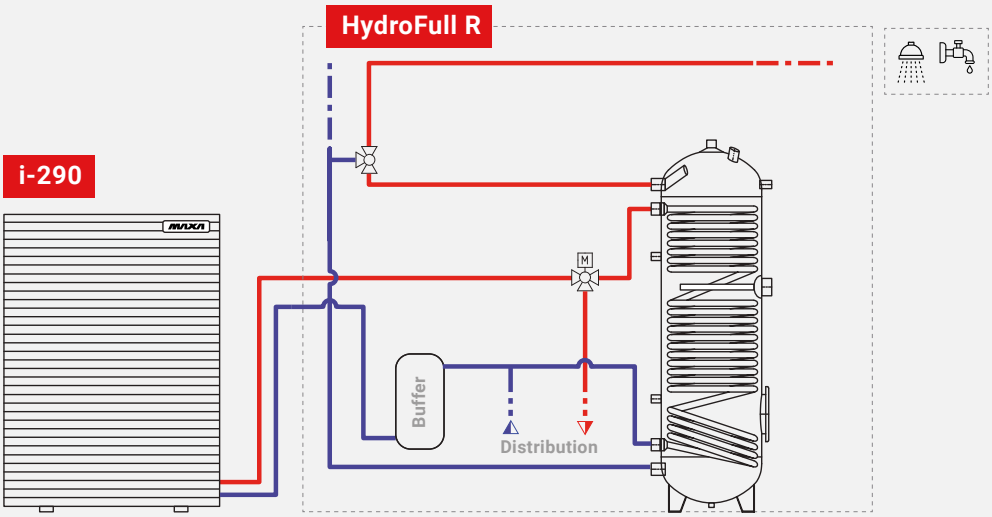


Hatching = supply perimeter

# Versions

## HydroFull-L

- **Cabinet**: supplied disassembled, in galvanized sheet metal for recessed installation, with top-hinged flap doors, or self-supporting cabinet supplied pre-assembled, in RAL 9016 painted sheet metal, with top-hinged flap doors.
- **Domestic hot water circuit**: with AISI 316L stainless steel storage tank, 200 l capacity, with heat exchanger for heat pump with nominal output up to 12 kW.
- **Hydraulic circuit**: for connection to the heat pump system.
- **Associated materials**: DHW diverting valve, boiler connection pipes, DHW circuit connection pipes, safety devices, thermostatic valve, DHW expansion vessel.

*All components are supplied in dedicated mounting kits.

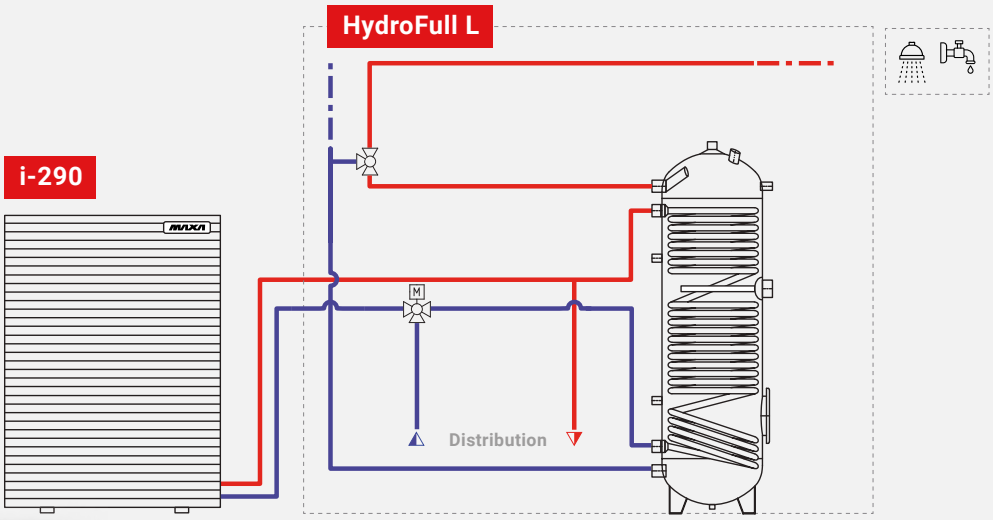


## HydroFull-X

- **Cabinet**: supplied disassembled, in galvanized sheet metal for recessed installation, with top-hinged flap doors, or self-supporting cabinet supplied pre-assembled, in RAL 9016 painted sheet metal, with top-hinged flap doors.
- **Domestic hot water circuit**: with AISI 316L stainless steel storage tank, 200 l capacity, with heat exchanger for heat pump with nominal output up to 12 kW.
- **Hydraulic circuit**: for connection to the heat pump system.
- **Accessories**: domestic hot water diverter valve, connection pipes to the storage tank, connection pipes for the domestic hot water circuit safety devices, thermostatic valve, domestic hot water expansion vessel, direct supply to the system.
- **40-litre technical** water buffer tank

*All components are supplied in dedicated mounting kits.

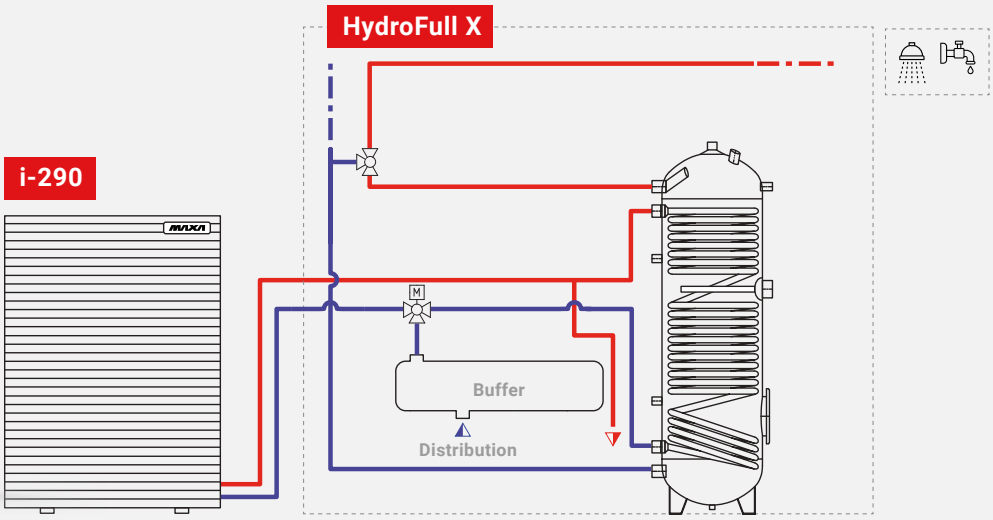


Hatching = supply perimeter

# Versions

## HydroFull-Y

- **Cabinet**: supplied disassembled, in galvanized sheet metal for recessed installation, with top-hinged flap doors, or self-supporting cabinet supplied pre-assembled, in RAL 9016 painted sheet metal, with top-hinged flap doors.
- **Domestic hot water circuit**: with AISI 316L stainless steel storage tank, 200 l capacity, with heat exchanger for heat pump with nominal output up to 12 kW.
- **Hydraulic circuit**: for connection to the heat pump system.
- **Standard accessories:** domestic hot water diverter valve, boiler connection pipes, domestic hot water circuit connection pipes, safety devices, thermostatic valve, domestic hot water expansion vessel, provision for two booster pumps.
- **40-litre technical** water buffer tank

*All components are supplied in dedicated mounting kits.

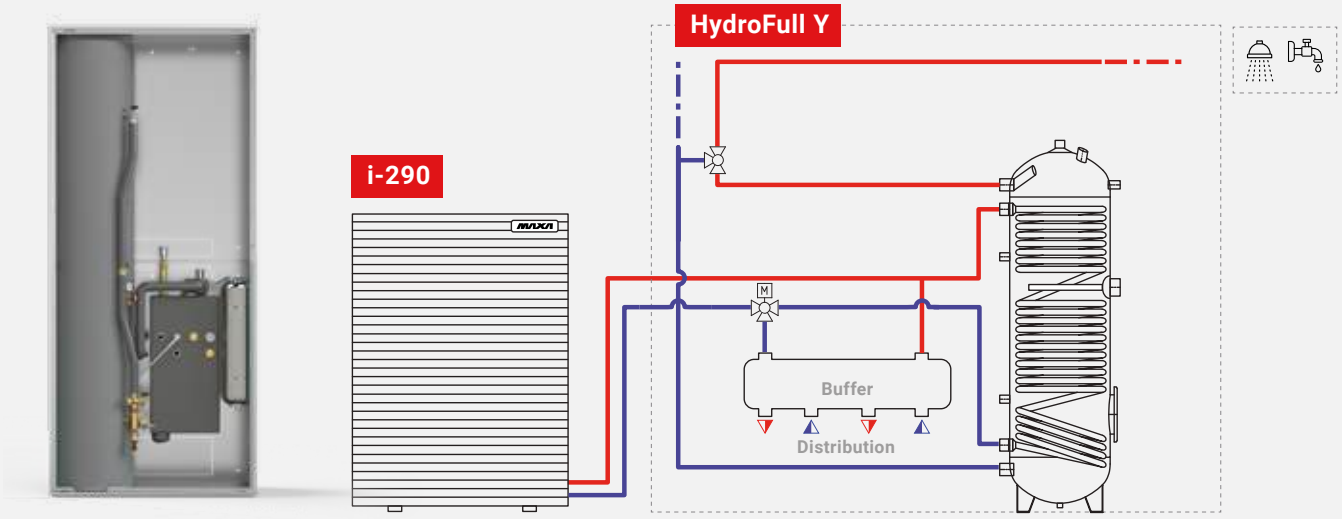


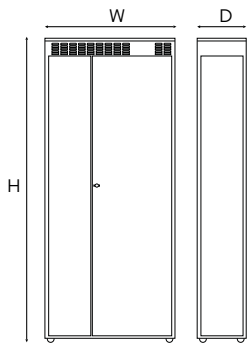


| | | | HydroFull-C | HydroFull-R | HydroFull-L | HydroFull-X | HydroFull-Y |
|---|---|---|---|---|---|---|---|
| HydroFull | Type of domestic hot water tank insulation | | polyurethane | polyurethane | EPS+graphite | EPS+graphite | EPS+graphite |
| | Heat exchange surface | mq | 1,65 | 0,69 | 2 | 2 | 2 |
| | Buffer tank volume | L | 20 | 20 | - | 40 | 40 |
| | Nominal volume of the domestic hot water tank | L | 150 | 150 | 200 | 200 | 200 |
| | Net volume | L | 137,5 | 143,5 | 200 | 200 | 200 |
| | Useful head of booster pump | kPa | 68 | 68 | * | * | * |
| | Expansion vessel volume** | L | 6 | 6 | 12 | 12 | 12 |
| | Thermal insulation density | kg/m³ | 40,5 | 40,5 | 25 | 25 | 25 |
| | Energy class | | C | C | C | C | C |
| | Specific heat loss | W/K | 1,67 | 1,67 | 3,06 | 3,06 | 3,06 |
| | Heat-dispersing surface | m² | 2,049 | 2,049 | 2,853 | 2,853 | 2,853 |
| | Heat dispersion | W | 75 | 75 | 82 | 82 | 82 |
| | Maximum operating temperature of the boiler | °C | 95 | 95 | 90 | 90 | 90 |
| | Net box dimensions<br>W<br>H<br>D | mm | 700<br>2200<br>350 | 950<br>2200<br>350 | 1000<br>2250<br>425 | 1000<br>2250<br>425 | 1000<br>2250<br>425 |
| | Net weight*** | kg | 100 | 149 | 185 | 210 | 210 |

* Refer to the technical manual of the product
** Intended as an expansion vessel exclusively serving the DHW tank

# Price list

| HydroFull-C | | | | |
|---|---|---|---|---|
| | | Code | € | |
| HydroFull-C * | HydroFull-C | 0102423#01000640111 | 7.878 | |
| ACCESSORIES SUPPLIED SEPARATELY | | | | |
| CARTER | Side closure Carter kit for box to cover hydraulic connections in exposed installations | 0102123#000701 | 102 | |
| VE10C | 10 L system expansion vessel kit | 0102123#000801 | 216 | |
| RE1.5M-R | 1.5 kW electric heater, complete with safety thermostat, controlled by the heat pump unit's electronic board | 0102123#000901 | 441 | |
| SAS | DHW storage sensor - Remote sensor | 0110321000001 | 48 | |

| HydroFull-R | | | | |
|---|---|---|---|---|
| | | Code | € | |
| HydroFull-R *** | HydroFull-R | 0102423#00000650100 | 6.283 | |
| ACCESSORIES SUPPLIED SEPARATELY | | | | |
| BOX-R | Cabinet for recessed or exposed installation. Supplied disassembled. | 0102123#000601 | 1.695 | |
| RE1.5M-R | 1.5 kW electric heater, complete with safety thermostat, controlled by the heat pump unit's electronic board | 0102123#000901 | 441 | |
| SAS | DHW storage sensor - Remote sensor | 0110321000001 | 48 | |

| HydroFull-L | | | | |
|---|---|---|---|---|
| | | Code | € | |
| HydroFull-L *** | Basic hydraulic kit | 0102323#00063000000 | 1.337 | 4.532 |
| | AISI 316L stainless steel boiler | 01023230000000102 | 3.195 | |
| ACCESSORIES SUPPLIED SEPARATELY | | | | |
| BOX-L-Z | Galvanized cabinet for recessed installation. Supplied disassembled | 0102123#000001 | 1.396 | |
| BOX-L-V | Surface-mounted cabinet painted RAL 9016. Supplied pre-assembled | 0102123#000101 | 1.895 | |
| RE1.25M-L | 1.25 kW electric heater, complete with safety thermostat; control is handled by the HP electronics | 0102123#000401 | 331 | |
| SAS | DHW storage sensor - Remote sensor | 0110321000001 | 48 | |
| | | | 48 | |

| HydroFull-X | | | | |
|---|---|---|---|---|
| | | Code | € | |
| HydroFull-X *** | Basic hydraulic kit | 0102323#00063000000 | 1.337 | 6.629 |
| | AISI 316L stainless steel boiler | 01023230000000102 | 3.195 | |
| | 40-litre technical water storage tank | 0102323#00063000100 | 1.492 | |
| | Direct connection installation kit | 0102323#00063000001 | 605 | |
| ACCESSORIES SUPPLIED SEPARATELY | | | | |
| BOX-L-Z | Galvanized cabinet for recessed installation. Supplied disassembled | 0102123#000001 | 1.396 | |
| BOX-L-V | Surface-mounted cabinet painted RAL 9016. Supplied pre-assembled | 0102123#000101 | 1.895 | |
| RE1.25M-L | 1.25 kW electric heater, complete with safety thermostat; control is handled by the HP electronics | 0102123#000401 | 331 | |
| VE10AT | 10 l expansion vessels for technical water storage | 0102123#000501 | 318 | |
| SAS | DHW storage sensor - Remote sensor | 0110321000001 | 48 | |

| HydroFull-Y | | | | |
|---|---|---|---|---|
| | | Code | € | |
| HydroFull-Y *** | Basic hydraulic kit | 0102323#00063000000 | 1.337 | 6.416 |
| | AISI 316L stainless steel boiler | 01023230000000102 | 3.195 | |
| | 40-litre technical water storage tank | 0102323#00063000100 | 1.492 | |
| | Booster Set Connection Kit (QTY 2) | 0102323#00063000002 | 196 + 196 | |
| ACCESSORIES SUPPLIED SEPARATELY | | | | |
| BOX-L-Z | Galvanized cabinet for recessed installation. Supplied disassembled | 0102123#000001 | 1.396 | |
| BOX-L-V | Surface-mounted cabinet painted RAL 9016. Supplied pre-assembled | 0102123#000101 | 1.895 | |
| RE1.25M-L | 1.25 kW electric heater, complete with safety thermostat; control is handled by the HP electronics | 0102123#000401 | 331 | |
| VE10AT | 10 l expansion vessels for technical water storage | 0102123#000501 | 318 | |
| KR-L | Direct booster group with standard circulator, head 6 m | 0102123#000201 | 767 | |
| K-MIX-L | Mixed booster group (230V) with standard circulator, 6 m head | 0102123#000301 | 879 | |
| SAS | DHW storage sensor - Remote sensor | 0110321000001 | 48 | |

* Box included
** Warning: all accessories related to the heat pump must be selected from the relevant price list (e.g.: SAS, AG, GI3...)
*** Warning: box not included

# Aqua Speedy

## Fast domestic hot water generator

18÷25 L

Aqua Speedy is an instantaneous domestic hot water producer with a water/water-type heat exchanger made of brazed stainless-steel plates. Domestic hot water temperature is controlled by a factory-mounted thermostatic mixing valve. An external energy source, from which the energy required to produce DHW is drawn, is always necessary. This energy source is usually a buffer tank kept at temperature by the heat pump. A circulator inside AquaSpeedy regulates the amount of required energy according to the DHW draw-off profile. AquaSpeedy therefore allows domestic hot water to be produced in complete safety.

### Advantages

- Instantaneous domestic hot water
- Nominal DHW delivery 18 or 25 l/min
- High efficiency thanks to the oversized stainless steel plate heat exchanger
- Maximum reduction of water stagnation with a consequent decrease in the risk of Legionella
- Wall or tank installation
- Quick installation and easy maintenance
- Complete with black EPP thermal insulation, 40 g/l.

### Use

In residential, commercial, and tertiary heat pump systems, Aqua Speedy is a suitable solution for providing instantaneous domestic hot water production.

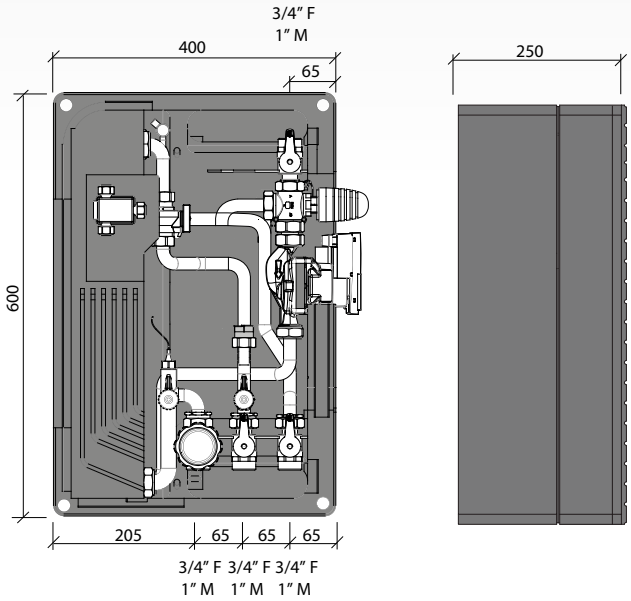


| | | | 18 | 25 |
|---|---|---|---|---|
| Aqua Speedy | Maximum secondary outlet flow rate (DHW) | l/m | 30 | 40 |
| | Minimum DHW flow rate ON/OFF | l/m | 2,5 - 0,3 | 2,5 - 0,3 |
| | Pressure drop DHW (30 l/min) | bar | 0,5 | 0,9 |
| | DHW temperature setpoint | °C | 40÷55 | 40÷55 |
| | Maximum pressure | bar | 10 | 10 |
| | Heat exchange surface | m2 | 0,882 | 1,76 |
| | Maximum primary supply flow rate | l/h | 1480 | 1700 |
| | Max temperature | °C | 90 | 90 |
| | Circulator | | Wilo PARA SC 15/1-6 | Wilo PARA SC 15/1-6 |
| | Maximum absorbed power | W | 45 | 45 |
| | Connections | | 3/4"F-1"M | 3/4"F-1"M |
| | Max. overall dimensions (packaging) | mm | 620x490x30 | 620x490x30 |
| | ULTRA CFMUS ULTRASONIC M-BUS Qn 1.5 m³/h - 110 x 3/4" | mm | 1.5 m3/h - CL2 - 110 mm x 3/4" | 1.5 m3/h - CL2 - 110 mm x 3/4" |
| | ULTRA CFMUS ULTRASONIC M-BUS Qn 1.5 m³/h - 110 x 3/4" | mm | 1.5 m3/h - CL2 - 110 mm x 3/4" | 1.5 m3/h - CL2 - 110 mm x 3/4" |
| | Dimensions WxDxH | mm | 400x250x600 | 400x250x600 |

## Price list

| | | | |
|---|---|---|---|
| Aqua Speedy | code | 01816#0006101 | 01816#0006201 |
| | € | 3.406 | 3.845 |

### Versions

- 18: 18 liters per minute with inlet 10°C, outlet 48°C and buffer tank 55°C
- 25: 25 liters per minute with inlet 10°C, outlet 48°C and buffer tank 55°C

# HWA2

## Range of chillers and reversible heat pumps with scroll compressors and R290 refrigerant

- **A single solution for heating, cooling and domestic hot water production** with guaranteed performance all year round.

- Sustainability, technology and reliability make this range suitable for integration in both commercial and industrial applications, thanks to the use of fixed-speed scroll compressor technology.

- The HWA2 range is designed to achieve water temperatures suitable for a wide variety of applications, including the indirect production of domestic hot water.

78°C
hot water

- The range includes **8 sizes**, available in cooling-only or heat pump versions.

- **Double range: chillers and reversible heat pumps.**
**HWA2-A** represents the range of chillers suitable for both comfort and industrial applications, thanks to the BT version, which allows fluid operating temperatures down to -8°C.
**HWA2-AH** thanks to its wide operating range and high maximum water temperature, it can easily be used both for new systems and for the replacement of existing systems.

- **3 different frames to meet every need**
The 8 different HWA2 sizes require different configurations; for this reason, 3 new frames have been developed, capable of accommodating all the components necessary for their proper operation.

- **Extensive hydraulic configurability**
Each size in the HWA2 range can be configured with various circulation pump models, which can optionally be complemented, on request, by the corresponding storage tank.
In addition, the hydraulic connections to the distribution system can be easily oriented, optimizing the connection to it (04140-04155-04170).

HWA2

## 0270-0280-0290

- 2 scroll compressors
- single refrigeration circuit
- optional: single AC pump, double AC pump, single inverter pump
- optional: integrated tank
- EC fans as standard (version A)
- optional: EC fans (AH version)
- optional: SL or SSL version

HWA2

## 04110-04120

- 4 scroll compressors
- dual refrigeration circuit
- optional: single AC pump, double AC pump, single inverter pump
- optional: integrated tank
- EC fans as standard (version A)
- optional: EC fans (AH version)
- optional: SL or SSL version

HWA2

## 04140-04155-04170

- 4 scroll compressors
- dual refrigeration circuit
- optional: single AC pump, double AC pump, single inverter pump
- optional: integrated tank
- EC fans as standard (version A)
- optional: EC fans (AH version)
- optional: SL or SSL version

# HWA2-A 0270÷04170

## Air-cooled water chiller, with scroll compressors, axial fans and R290 GAS

70 kW÷170 kW

During certification

The HWA2 range uses the natural refrigerant R290, which drastically reduces environmental impact and offers top-level energy performance.
Designed for commercial and industrial applications and equipped with large-surface air-side heat exchangers, they ensure high efficiency, with SEER values among the highest in their category.
The use of high-efficiency, particularly robust scroll compressors, together with the oil recovery and distribution system adopted on tandem circuits, ensures high reliability and consistent performance.
Available in 8 sizes.

MADE IN ITALY | REFRIGERANT 0.02 GWP | SCROLL COMPRESSORS | SUPER SILENCED VERSION | VERSION BT | MODBUS AVAILABLE AS STANDARD

**Carpentry:** all units in the series feature a structure suitable for outdoor installation, made of hot-dip galvanized steel sheet and coated with RAL 7035/RAL 7046 polyester powder paint (only for certain components) to ensure maximum resistance to atmospheric agents. All screws and inserts are in galvanized and stainless steel.

**Compressors:** scroll type, specifically designed to operate with R290, mounted on a double anti-vibration slide. The permanently installed crankcase heater is activated when the compressor is stopped and is disabled when it restarts.

**Air-side heat exchangers**: entirely made of aluminum using microchannel technology, which significantly reduces both air-side pressure drops and refrigerant charge, while at the same time ensuring higher heat transfer capacity for the same frontal surface area compared to traditional heat exchangers.

**User side heat exchangers:** of the brazed-plate type. Made of AISI stainless steel for both single-circuit and dual-circuit units, factory-insulated with closed-cell material. They can be equipped with an electric antifreeze heater (optional accessory KA). A differential pressure switch, installed on the water side, ensures the presence of water flow, preventing ice formation inside.

**Fans:** axial type with airfoil blades. They are statically and dynamically balanced and supplied complete with protective grille and inlet/outlet nozzles with double flared profile, specially shaped to increase efficiency and reduce noise. The motor has a degree of protection IP54 according to CEI EN 60529. The electric motor used is modulation-controlled with a directly coupled EC brushless motor and equipped with integrated thermal protection, which ensures condensation control down to an outdoor temperature of -20 °C.

**Refrigeration circuit:** built using components from leading international manufacturers and in accordance with UNI EN 13134. The refrigerant gas is R290. In its basic version, the refrigeration circuit includes: electronic expansion valve, service valves for maintenance and control, safety device compliant with current regulations (two high-pressure switches per circuit), pressure transducers to accurately measure evaporation and condensation pressures, filter drier, sight glass for monitoring the refrigerant charge, and solenoid valve.

**Electrical panel:** fully manufactured and wired in compliance with standard EN 60204, comprising a power section and a control section. The degree of protection of the electrical panel is IP54. The electrical panel is equipped with a terminal block with volt-free contacts for remote ON-OFF.

**Control system:** all units are equipped with a microprocessor control board with superheat control logic managed on the basis of the signals sent by the pressure transducers and temperature probes. The CPU also controls the following functions: regulation of the water temperature, antifreeze protection, compressor start-up and timing, management of fan and circulation pumps (if present), alarm reset, alarm signaling and operation LEDs.
ModBus RTU RS-485 interface available as standard on the terminal block.

**Control and protection devices**: all units are equipped with the following control and protection devices: phase monitor complete with minimum and maximum voltage relay, which stops the unit if the phase sequence is incorrect or if the voltage of at least one phase differs by more than 10% from the others. Leaving water temperature sensor (with antifreeze function for the water circuit), return water temperature sensor, low-pressure transducer, high-pressure transducer, discharge temperature sensor on the compressors, suction temperature sensor on the compressors, outdoor air temperature sensor.
Thermomagnetic circuit breakers for the protection of: transformer, compressors, pumps (if present) and fans, fan thermal protection, thermal protection on each compressor, differential pressure switch on the water side, two manually reset high-pressure switches installed on the compressor discharge line.

**Hydraulic circuit:** the HWA2 series can be supplied with a built-in, highly configurable hydronic kit which, in addition to the differential pressure switch, can include a single pump or a twin-pump set (one in standby as backup to the other), suitable for use with chilled water containing glycol up to 50%, and directly managed by the onboard unit controller. It is also possible to install an internal inertial buffer tank, externally insulated with closed-cell expanded material, with a capacity suitable for the unit size.

**R290 gas safety**: the HWA2 series is equipped with an automatic electronic system for detecting any R290 gas releases. Activation of the R290 gas safety system starts the ATEX fan in the compressor compartment, ensuring rapid dispersion and dilution of the gas. When the unit is fitted with a pump kit or twin pump, a second R290 detector is added, providing an additional level of monitoring and increasing the overall safety of the installation.

## Operating Areas

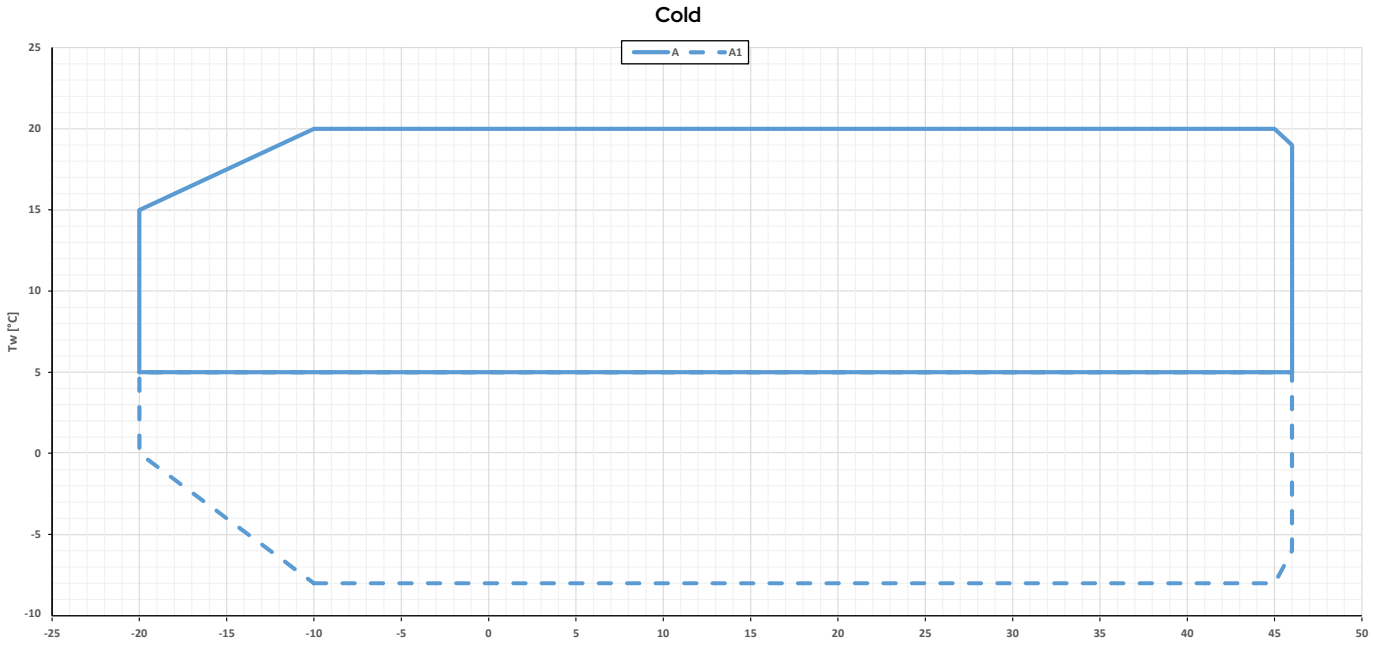


Tw: water temperature - Ta: outdoor air temperature |n|A = HWA2-A + EC-CC
A1 = HWA2-A BT

## Accessories

### Factory-installed

- **KA1 *** – Antifreeze heater for heat exchanger and pump (if present) – electric heating element installed on the front face of the plate heat exchanger, which is activated when the water temperature inside the exchanger falls below +4°C, and electric heating element that protects the pump motor at low temperatures.
- **SL ** –** The silenced unit features an innovative acoustic insulation applied to the compressor compartment panels. This system significantly reduces noise during operation, improving the acoustic comfort of the surrounding environment.
- **SSL ** –** The super-silenced unit combines the acoustic insulation applied to the compressor compartment panels with a special diffuser mounted on the fan. This diffuser increases its efficiency, allowing the speed to be reduced, lowering the sound pressure level and optimizing energy consumption.
- **PS *** –** Reversible heat pump, heating-only version with standard head.
- **PSAP *** –** Reversible heat pump, high head pump-only version.
- **PSI*** -** AC circulation pump controlled by an external inverter installed in the electrical panel.
- **PSIAP** -** High head AC circulation pump controlled by an external inverter installed in the electrical panel.
- **PD *** –** Reversible heat pump, dual-pump version with standard head.
- **PDAP *** –** Reversible heat pump, dual high-head pump version.
- **PS-SI *** –** Reversible heat pump, pump-only version with standard head + tank and expansion vessel.
- **PSAP-SI *** –** Reversible heat pump, high-head pump only version + tank and expansion vessel.
- **PSI-SI*** -** AC circulation pump controlled via external inverter installed in the electrical panel + tank and expansion vessel.
- **PSIAP-SI*** -** High head AC circulation pump controlled via external inverter installed in the electrical panel + tank and expansion vessel.
- **PD-SI *** –** Reversible heat pump, dual-pump version with standard head + tank and expansion vessel.
- **PDAP-SI *** –** Reversible heat pump, high-head double pump version + tank and expansion vessel.
- **TR1** – Microchannel coil with Aero surface treatment. The treatment consists of spraying a special water-based coating, formulated with new resins offering extremely high chemical resistance. The product is flexible to withstand thermal contractions and expansions, UV-resistant, dirt-repellent, mechanically resistant, with very limited reduction in heat transfer and virtually no impact on air-side pressure drops. The treatment withstands 6,000 h according to ASTM B117.
- **TR1C4** - Anti-corrosion treatment on coil and sheet metal – includes a TR1-type treatment on the coil and, in addition, the hot-dip galvanized steel panels are painted so as to make them suitable for unit installation in C4H environments, according to UNI EN 12944. The external fastening hardware is made of AISI 304 material, class A2.
- **C4** - The hot-dip galvanized steel panels are painted to ensure compliance with installation in C4H-class environments, in accordance with UNI EN 12944. The external fastening hardware is made of AISI 304 stainless steel (A2 class), ensuring corrosion resistance and long-term durability.
- **BT** - The BT accessory allows the operating range of the water temperature to be extended down to -8°C. In this case, it is mandatory to use a water-glycol mixture suitable for the operating point and for the minimum temperature reached by the system.

** Accessories not usable simultaneously
*** Accessories not usable simultaneously

# Accessories

- **EC-CC** - Modulating EC fan. Includes the CC function, condensation control down to -20°C. Mandatory accessory for cooling-only versions, comfort applications, EU market.
- **GR2** - Battery compartment anti-intrusion kit – wire mesh to prevent the entry of foreign objects into the coil and to protect the coil from accidental contact by people or objects.
- **GR4** - Anti-intrusion kit for hydraulic circuit compartment and anti-intrusion kit for coil compartment.
- **SS** - Soft starter – electronic static starter for inrush current management, installed inside the electrical panel; it allows a reduction of inrush current and of mechanical wear on the motor windings.
- **KS** - Lifting bracket kit – facilitates lifting and positioning of the unit.
- **MN** - External pressure gauges for quick monitoring of high and low pressure; four gauges in dual-circuit units.

## Provided separately

- **AG** - Rubber anti-vibration kit – designed to prevent vibration transmission to the structure; they are to be installed beneath the unit, in the designated mounting holes.
- **AM -** Spring anti-vibration kit – designed to prevent transmission of vibrations to the structure; they must be installed underneath the unit, in the designated holes.
- **FY** - Y-strainer – contains a stainless steel mesh screen (500 µm filtration) that collects solid materials present in the water. Filtration prevents blockage and/or damage to the devices installed downstream of the strainer. Alternatively, it is possible to install a dirt separator that ensures a filtration level not greater than 1 mm (in this case, it is no longer necessary to install the Y-strainer).
- **SAS** - Remote system probe.
- **TQE** - Rainproof cover for electrical panel.
- **RV** - Grooved coupling joint kit with carbon steel pipe stubs, complete with grooved connection to the unit and flanged connection with gasket for direct connection to the system.
- **ISK**** - USB/RS485 serial converter – interface device capable of reading and writing control registers via the RS485 standard and converting them to a USB port that can be connected to any supervision system.
- **LNC**** - LAN-Wi-Fi router – device that allows the unit to be connected to a local network via Ethernet cable or Wi-Fi coverage for remote monitoring.
- **OVPN**** - 4G LAN-Wi-Fi router with VPN tunnelling – a device that allows you to connect the unit remotely to an industrial router using the secure OPENVPN service.
- **Hi-TV415**** - Color touch screen wired remote controller for the centralized management of a cascade of chillers/heat pumps, for up to 7 units.

** Accessories not usable simultaneously

**Hi-TV415**
Touch screen remote controller for cascade management (max 7 units)
**ACCESSORY**

| HWA2-A | | | 0270 | 0280 | 0290 | 04110 |
|---|---|---|---|---|---|---|
| Cooling | Cooling capacity (1) | kW | 67,1 | 75,7 | 79,1 | 98,3 |
| | Total absorbed power (1) | kW | 19,7 | 21,7 | 24,4 | 31,7 |
| | EER (1) | W/W | 3,41 | 3,49 | 3,24 | 3,10 |
| | Cooling capacity (2) | kW | 89,9 | 98,5 | 103 | 138 |
| | Total absorbed power (2) | kW | 22,3 | 24,7 | 28 | 34,5 |
| | EER (2) | W/W | 4,03 | 3,99 | 3,68 | 4,00 |
| | SEER (3) | W/W | 4,70 | 5,09 | 4,69 | 4,29 |
| | IPLV (9) | | 5,55 | 6,04 | 5,69 | TBD |
| | Cooling capacity (8) | kW | 41,2 | 46,5 | 48,8 | TBD |
| | Total absorbed power (8) | kW | 18,1 | 19,5 | 21,5 | TBD |
| | EER (8) | W/W | 2,28 | 2,38 | 2,27 | TBD |
| | Water flow rate (1) | l/s | 3,21 | 3,62 | 3,78 | 4,70 |
| | Pressure drops in the heat exchanger on the user side (1) | kPa | 18,00 | 22,40 | 24,20 | 16,30 |
| Compressor | Compressor type | | SCROLL | | | |
| | Refrigerant oil (type) | | POE 160SZ | | | |
| | No. of compressors | No. | 2 | 2 | 2 | 4 |
| | Standard capacity steps | No. | 2 | 3 | 2 | 5 |
| | Oil loading | l | 6,6 | 6,6 | 6,6 | 13,2 |
| | Refrigerant circuits | No. | 1 | 1 | 1 | 2 |
| Refrigerant | Type | | R290 | | | |
| | Refrigerant charge (4) Circuit 1 | kg | 4,5 | 4,5 | 4,5 | 3,8 |
| | Refrigerant charge (4) Circuit 2 | kg | - | - | - | 3,8 |
| | Tons of $CO_2$ equivalent (4) | Ton | 0,0001 | 0,0001 | 0,0001 | 0,0002 |
| | Design pressure (high/low) | bar | 33/1,7 | 33/1,7 | 33/1,7 | 33/1,7 |
| Outdoor zone fans | Fan types | | AXIAL - EC | | | |
| | No. of fans | No. | 2 | 2 | 2 | 2 |
| | Rated power (1) | kW | 1,9 | 1,9 | 1,9 | 1,7 |
| | Maximum power | kW | 2,55 | 2,55 | 2,55 | 2 |
| | Maximum absorbed current | A | 4 | 4 | 4 | 3,1 |
| | Standard air flow rate | m³/h | 42000 | 42000 | 42000 | 42000 |
| Internal heat exchanger | Internal heat exchanger type | | PHE – PLATE TYPE | | | |
| | No. of indoor heat exchangers | No. | 1 | 1 | 1 | 1 |
| | Water content | l | 5,30 | 5,30 | 5,30 | 8,30 |
| Hydraulic circuit | Maximum water-side pressure | bar | 6 | 6 | 6 | 6 |
| | Maximum pressure of hydronic kit (safety valve setting) | bar | 6 | 6 | 6 | 6 |
| | Water connections | | 2" | 2" | 2" | 2" 1/2 |
| | Minimum system water content (5) | l | 354 | 423 | 414 | 270 |
| Sound data | Sound power (6) | dB (A) | 85 std<br>83 SL<br>81 SSL | 86 std<br>84 SL<br>82 SSL | 86 std<br>84 SL<br>82 SSL | 87 std<br>85 SL<br>83 SSL |
| | Sound pressure (7) | dB (A) | 53 std<br>51 SL<br>49 SSL | 54 std<br>52 SL<br>50 SSL | 54 std<br>52 SL<br>50 SSL | 55 std<br>53 SL<br>51 SSL |
| Electrical data | Power supply | | 400V/3P/50Hz | | | |
| | Maximum input power, version without accessories | kW | 42,4 | 45,6 | 48,8 | 64,0 |
| | Maximum current absorbed, version without accessories | A | 64,2 | 71,0 | 77,8 | 102,4 |
| | Maximum inrush current for version without accessories | A | 327,0 | 366,0 | 405,0 | 241,8 |
| Dimensions and weights | Standard length / with tank | mm | 2570 / 3280 | 2570 / 3280 | 2570 / 3280 | 3960 / 4670 |
| | Depth | mm | 1135 | 1135 | 1135 | 1135 |
| | Standard height / SSL | mm | 2250 / 2300 | 2250 / 2300 | 2250 / 2300 | 2250 / 2300 |
| | Net transport weight (standard version) | kg | 1055 | 1060 | 1065 | 1270 |
| | Operating weight (standard version) | kg | 1065 | 1070 | 1075 | 1280 |

(1) Internal heat exchanger water temperature = 12/7°C, air entering the external heat exchanger 35°C.
(2) Internal heat exchanger water temperature = 23/18°C, air entering the external heat exchanger 35°C.
(3) Cooling: low temperature, variable output, constant flow rate.
(4) Data is indicative and subject to change. For the correct value, always refer to the technical label on the unit.
(5) The calculated value of minimum system water volume does not take into account the water volume contained in the internal heat exchanger (evaporator). For applications with low outdoor air temperature or low required average loads, the minimum system water volume is obtained by doubling the indicated value.
(6) Condition (1); value determined on the basis of measurements carried out in accordance with UNI EN ISO 9614-2, in compliance with the requirements of Eurovent certification.
(7) Value calculated from the sound power level using ISO 3744:2010, referenced to a distance of 10 m from the unit.
(8) Cooling BT version: outdoor air temperature 35°C, internal heat exchanger water temperature = -3/-8°C. Fluid treated with 35% ethylene glycol.
(9) Calculated according to AHRI 551/591 (SI) standard.
The performance data provided are indicative and may be subject to change. The capacities declared at points (1), (2), (8) refer to the instantaneous output in accordance with EN 14511:2022. The data declared at point (3) are determined in accordance with UNI EN 14825:2022.

| HWA2-A | | | 04120 | 04140 | 04155 | 04170 |
|---|---|---|---|---|---|---|
| **Cooling** | Cooling capacity (1) | kW | 112,0 | 132,4 | 141,6 | 152,4 |
| | Total absorbed power (1) | kW | 35,2 | 42,3 | 47,0 | 50,8 |
| | EER (1) | W/W | 3,18 | 3,13 | 3,01 | 3,00 |
| | Cooling capacity (2) | kW | 155 | 169,6 | 180 | 192,4 |
| | Total absorbed power (2) | kW | 38,6 | 44,5 | 48,8 | 52,7 |
| | EER (2) | W/W | 4,02 | 3,81 | 3,69 | 3,65 |
| | SEER (3) | W/W | 4,45 | ≤ 4 | ≤ 4 | ≤ 4 |
| | IPLV (9) | | TBD | TBD | TBD | TBD |
| | Cooling capacity (8) | kW | TBD | TBD | TBD | TBD |
| | Total absorbed power (8) | kW | TBD | TBD | TBD | TBD |
| | EER (8) | W/W | TBD | TBD | TBD | TBD |
| | Water flow rate (1) | l/s | 5,35 | 6,33 | 6,77 | 7,28 |
| | Pressure drops in the heat exchanger on the user side (1) | kPa | 20,70 | 21,86 | 21,36 | 21,52 |
| **Compressor** | Compressor type | | SCROLL | | | |
| | Refrigerant oil (type) | | POE 160SZ | | | |
| | No. of compressors | No. | 4 | 4 | 4 | 4 |
| | Standard capacity steps | No. | 4 | 4 | 6 | 4 |
| | Oil loading | l | 13,2 | 13,2 | 13,2 | 13,2 |
| | Refrigerant circuits | No. | 2 | 2 | 2 | 2 |
| **Refrigerant** | Type | | R290 | | | |
| | Refrigerant charge (4) Circuit 1 | kg | 3,8 | 4,4 | 4,5 | 4,5 |
| | Refrigerant charge (4) Circuit 2 | kg | 3,8 | 4,4 | 4,5 | 4,5 |
| | Tons of $CO_2$ equivalent (4) | Ton | 0,0002 | 0,0002 | 0,0002 | 0,0002 |
| | Design pressure (high/low) | bar | 33/1,7 | 33/1,7 | 33/1,7 | 33/1,7 |
| **Outdoor zone fans** | Fan types | | AXIAL - EC | | | |
| | No. of fans | No. | 2 | 4 | 4 | 4 |
| | Rated power (1) | kW | 1,7 | 1,9 | 1,9 | 1,9 |
| | Maximum power | kW | 2 | 2,6 | 2,6 | 2,6 |
| | Maximum absorbed current | A | 3,1 | 4 | 4 | 4 |
| | Standard air flow rate | m³/h | 42000 | 84000 | 84000 | 84000 |
| **Internal heat exchanger** | Internal heat exchanger type | | PHE – PLATE TYPE | | | |
| | No. of indoor heat exchangers | No. | 1 | 1 | 1 | 1 |
| | Water content | l | 8,30 | 12,60 | 13,90 | 15,10 |
| **Hydraulic circuit** | Maximum water-side pressure | bar | 6 | 6 | 6 | 6 |
| | Maximum pressure of hydronic kit (safety valve setting) | bar | 6 | 6 | 6 | 6 |
| | Water connections | | 2" 1/2 | 2" 1/2 | 2" 1/2 | 2" 1/2 |
| | Minimum system water content (5) | l | 326 | TBD | TBD | TBD |
| **Sound data** | Sound power (6) | dB (A) | 88 std<br>86 SL<br>84 SSL | TBD | TBD | TBD |
| | Sound pressure (7) | dB (A) | 56 std<br>54 SL<br>52 SSL | TBD | TBD | TBD |
| **Electrical data** | Power supply | | 400V/3P/50Hz | | | |
| | Maximum input power, version without accessories | kW | 68,8 | 77,5 | 84,0 | 90,5 |
| | Maximum current absorbed, version without accessories | A | 109,8 | 123,4 | 137,0 | 150,6 |
| | Maximum inrush current for version without accessories | A | 256,8 | TBD | TBD | TBD |
| **Dimensions and weights** | Standard length / with tank | mm | 3960 / 4670 | 2810 | 2810 | 2810 |
| | Depth | mm | 1135 | 2320 | 2320 | 2320 |
| | Standard height / SSL | mm | 2250 / 2300 | 2362 / 2369 | 2362 / 2369 | 2362 / 2369 |
| | Net transport weight (standard version) | kg | 1280 | 1950 | 1960 | 1975 |
| | Operating weight (standard version) | kg | 1290 | 1955 | 1965 | 1980 |

(1) Internal heat exchanger water temperature = 12/7°C, air entering the external heat exchanger 35°C.
(2) Internal heat exchanger water temperature = 23/18°C, air entering the external heat exchanger 35°C.
(3) Cooling: low temperature, variable output, constant flow rate.
(4) Data is indicative and subject to change. For the correct value, always refer to the technical label on the unit.
(5) The calculated value of minimum system water volume does not take into account the water volume contained in the internal heat exchanger (evaporator). For applications with low outdoor air temperature or low required average loads, the minimum system water volume is obtained by doubling the indicated value.
(6) Condition (1); value determined on the basis of measurements carried out in accordance with UNI EN ISO 9614-2, in compliance with the requirements of Eurovent certification.
(7) Value calculated from the sound power level using ISO 3744:2010, referenced to a distance of 10 m from the unit.
(8) Cooling BT version: outdoor air temperature 35°C, internal heat exchanger water temperature = -3/-8°C. Fluid treated with 35% ethylene glycol.
(9) Calculated according to AHRI 551/591 (SI) standard.
The performance data provided are indicative and may be subject to change. The capacities declared at points (1), (2), (8) refer to the instantaneous output in accordance with EN 14511:2022. The data declared at point (3) are determined in accordance with UNI EN 14825:2022.

# Dimensional Drawings

## HWA2-A 0270 / 0280 / 0290

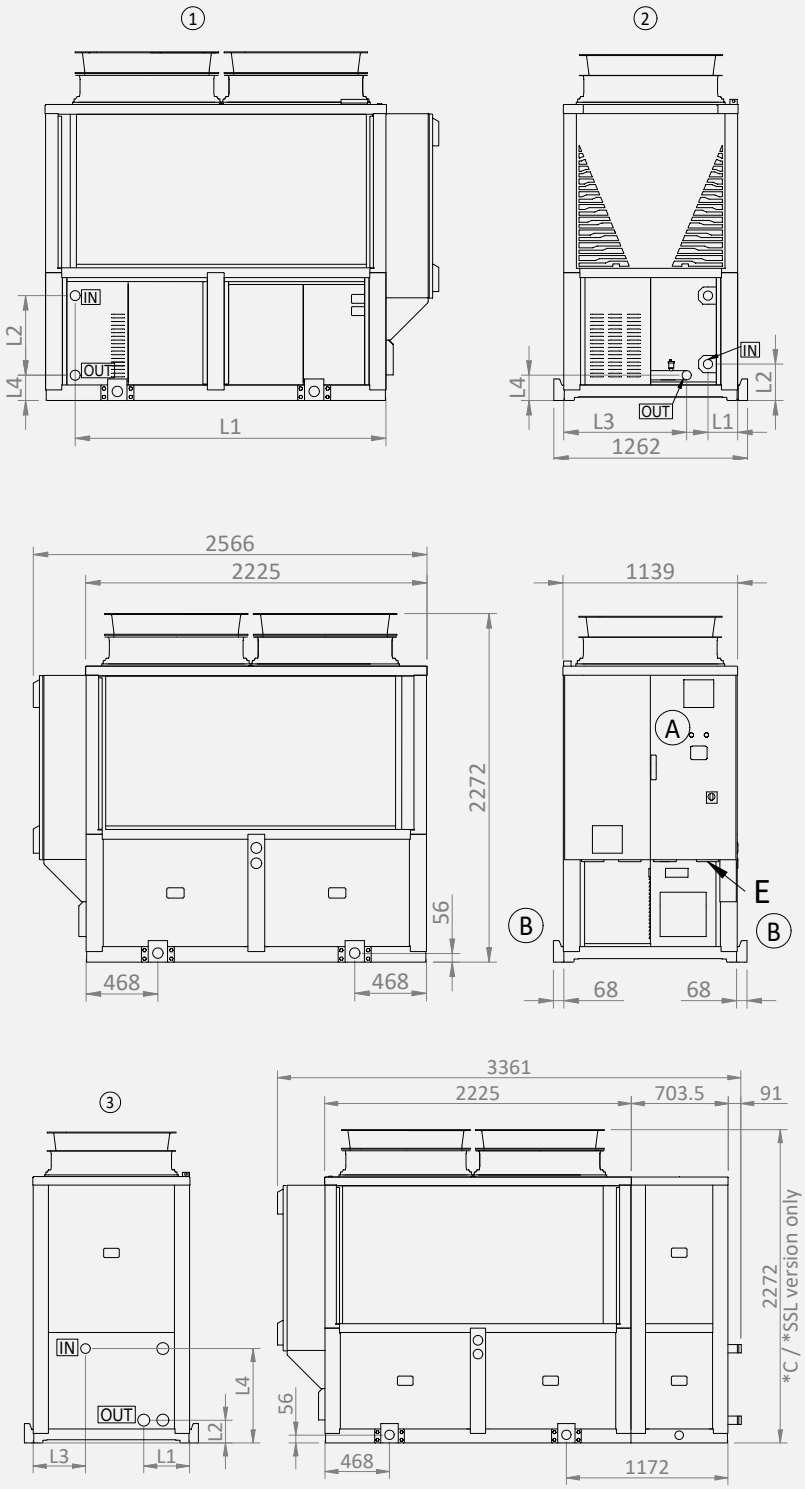


| Version | L1 | L2 | L3 | L4 | IN / OUT | Version height -SSL / -C |
|---|---|---|---|---|---|---|
| Standard | 2026 | 519 | - | 165 | 2" Victaulic | 2295 |
| Single - Dual pump | 194 | 236 | 802 | 685 | | 2295 |
| Single - Dual pump with tank | 332 | 165 | 380 | 685 | | 2295 |

A: Electrical panel
B: Lifting bracket
E: Power supply input
* Accessory

** Standard version height; for -SSL / -C: see table

Dimensions in mm

# Price list

| HWA2-A | | | 270 | 280 | 290 |
|---|---|---|---|---|---|
| HWA2-A | Cooling only | € | 35.631 | 36.238 | 36.566 |

| FACTORY-MOUNTED ACCESSORY MANDATORY: Standard EC fan for ERP regulation to be added to the unit price | | | | | |
|---|---|---|---|---|---|
| EC-CC | EC fan (included in BT, SSL versions). DC control included | € | 1.024 | 1.024 | 1.024 |
| **FACTORY-MOUNTED ACCESSORIES** | | | | | |
| BT | Cooling only BT version (EC-CC accessory already included) | € | 2.142 | 2.142 | 2.142 |
| KA1 | Adhesive heater for heat exchanger + pump heater (if present).<br>Not available for units with tank | € | 253 | 253 | 253 |
| GR2 | Anti-intrusion battery compartment kit | € | 1.388 | 1.388 | 1.388 |
| GR4 | Anti-intrusion kit for hydraulic circuit compartment and anti-intrusion kit for batteries compartment | € | 2.602 | 2.602 | 2.602 |
| PS | Standard head pump | € | 3.998 | 3.998 | 3.998 |
| PSI | Standard head pump controlled by an inverter installed in the electrical panel | € | 4.555 | 4.555 | 4.555 |
| PSAP | High-head pump | € | 4.457 | 4.457 | 4.457 |
| PSIAP | High-head pump controlled by an inverter installed in the electrical panel | € | 5.012 | 5.012 | 5.012 |
| PD | Twin pump, standard head | € | 7.259 | 7.259 | 7.259 |
| PDAP | Dual high-head pump | € | 8.109 | 8.109 | 8.109 |
| PS-SI | Standard head pump + tank | € | 9.275 | 9.275 | 9.275 |
| PSI-SI | Standard head pump controlled by an inverter installed in the electrical panel + tank and expansion vessel | € | 9.790 | 9.790 | 9.790 |
| PSAP-SI | High head pump + tank | € | 9.700 | 9.700 | 9.700 |
| PSIAP-SI | High-head pump with inverter control installed in the electrical panel + tank and expansion vessel | € | 10.216 | 10.216 | 10.216 |
| PD-SI | Dual standard-head pump + tank | € | 12.960 | 12.960 | 12.960 |
| PDAP-SI | Double high-head pump + tank | € | 13.810 | 13.810 | 13.810 |
| KS | Lifting bracket kit | € | 731 | 731 | 731 |
| MN | External pressure gauges | € | 280 | 280 | 280 |
| SS | Soft starter | € | 2.002 | 2.002 | 2.002 |
| SL | Silenced version | € | 811 | 811 | 811 |
| SSL | Ultra-silent version<br>(EC-CC accessory is already included for these versions) | € | 4.081 | 4.081 | 4.081 |
| TR1 | Microchannel coil with Aero surface treatment | € | Contact our office | | |
| TR1C4 | Cu/Al coil and sheet metal with anti-corrosion treatment | € | Contact our office | | |
| C4 | Protective treatment | € | Contact our office | | |
| **ACCESSORIES SUPPLIED SEPARATELY** | | | | | |
| AG | Rubber anti-vibration mounts | € | 749 | 749 | 749 |
| AM | Spring anti-vibration mounts | € | 1.929 | 1.929 | 1.929 |
| FY | Y-strainer | € | 180 | 180 | 180 |
| Hi-TV415 | Touchscreen remote control | € | 659 | 659 | 659 |
| RV | Starter kit consisting of 2 jaws and 2 plain stubs | € | Contact our office | | |
| SAS | Remote sensor | € | 48 | 48 | 48 |
| TQE | Rain cover for electrical control panel | € | 309 | 309 | 309 |

# HWA2-AH 0270÷04170

## Reversible air/water heat pump, with scroll compressors, axial fans and R290 REFRIGERANT GAS

70 kW÷170 kW

During certification

The HWA2 range uses natural refrigerant R290, which drastically reduces environmental impact and delivers top-level energy performance.
Designed for commercial and industrial applications and equipped with large-surface air-side heat exchangers, they ensure high efficiency, with SCOP and SEER values among the highest in their category.
The use of high-efficiency, particularly robust scroll compressors, together with the oil recovery and distribution system adopted on tandem circuits, ensures high reliability and consistent performance.
Available in 8 sizes.

MADE IN ITALY | R290 REFRIGERANT 0.02 GWP | 78°C OUTLET WATER Supply Temperature | SCROLL COMPRESSORS | SUPER SILENCED VERSION | VERSION BT | MODBUS AVAILABLE AS STANDARD

**Carpentry:** all units in the series feature a structure suitable for outdoor installation, made of hot-dip galvanized steel sheet and coated with RAL 7035/RAL 7046 polyester powder paint (only for certain components) to ensure maximum resistance to atmospheric agents. All screws and inserts are in galvanized and stainless steel.

**Compressors:** scroll type, expressly designed to operate with R290, mounted on a double anti-vibration slide. The crankcase heater, which is always present, is activated when the compressor is stopped and is disabled when it restarts.

**Air side heat exchangers:** finned coil type, made with copper tubes and aluminum fins with corrugated surface, spaced appropriately to ensure maximum heat exchange efficiency.
At the base of the heat exchangers, there are drain pans for the collection and drainage of condensate water.

**User side heat exchangers:** of the brazed-plate type. Made of AISI stainless steel for both single-circuit and dual-circuit units, factory-insulated with closed-cell material. They can be equipped with an electric antifreeze heater (optional accessory KA). A differential pressure switch, installed on the water side, ensures the presence of water flow, preventing ice formation inside.

**Fans:** axial type with airfoil-profile blades. They are statically and dynamically balanced and supplied complete with protection grille and inlet and outlet air nozzles with double flared profile, specially shaped to increase efficiency and reduce noise. The motor has an IP54 protection rating according to CEI EN 60529. EC fans, with EC electric motor driven in modulation, are available as accessories on request.

**Refrigeration circuit:** is made using components from leading international manufacturers and in accordance with UNI EN 13134. The refrigerant gas is R290. In its basic version, the refrigeration circuit includes: electronic expansion valve, inspection valves for maintenance and control, a safety device compliant with current regulations (two high-pressure switches per circuit), pressure transducers to accurately measure evaporation and condensation pressures, high-capacity filter drier to prevent expansion valve clogging and remove any moisture present in the circuit, liquid sight glass for checking the refrigerant charge, solenoid valve, 4-way cycle-reversing valve, liquid separator, liquid receiver, and the outdoor air temperature sensor.

**Electrical panel:** fully manufactured and wired in compliance with standard EN 60204, comprising a power section and a control section. The degree of protection of the electrical panel is IP54. The electrical panel is equipped with a terminal block with volt-free contacts for remote ON-OFF.

**Control system:** all units are equipped with a control board featuring a microprocessor with superheat control logic managed based on the signals sent by pressure transducers and temperature probes. The CPU also controls the following functions: water temperature regulation, antifreeze protection, compressor start-up and timing, fan and circulation pump management (if present), alarm reset, alarm indication and operating status LEDs. On request, the microprocessor can be connected to remote BMS control systems. ModBus RTU RS-485 interface available as standard on the terminal block.

**Control and protection devices**: all units are equipped with the following control and protection devices: phase monitor complete with minimum and maximum voltage relay, which stops the unit if the phase sequence is incorrect or if the voltage of at least one phase differs by more than 10% from the others. Leaving water temperature sensor (with antifreeze function for the water circuit), return water temperature sensor, low-pressure transducer, high-pressure transducer, discharge temperature sensor on the compressors, suction temperature sensor on the compressors, outdoor air temperature sensor.
Thermomagnetic circuit breakers for the protection of: transformer, compressors, pumps (if present) and fans, fan thermal protection, thermal protection on each compressor, differential pressure switch on the water side, two manually reset high-pressure switches installed on the compressor discharge line.

**Hydraulic circuit:** the HWA2 series can be supplied with a built-in, highly configurable hydronic kit which, in addition to the differential pressure switch, can include a single pump or a twin-pump set (one in standby as backup to the other), suitable for use with chilled water containing glycol up to 50%, and directly managed by the onboard unit controller. It is also possible to install an internal inertial buffer tank, externally insulated with closed-cell expanded material, with a capacity suitable for the unit size.

**R290 gas safety**: the HWA2 series is equipped with an automatic electronic system for detecting any R290 gas releases. Activation of the R290 gas safety system starts the ATEX fan in the compressor compartment, ensuring rapid dispersion and dilution of the gas. When the unit is fitted with a pump kit or twin pump, a second R290 detector is added, providing an additional level of monitoring and increasing the overall safety of the installation.

## Operating Areas

### Hot

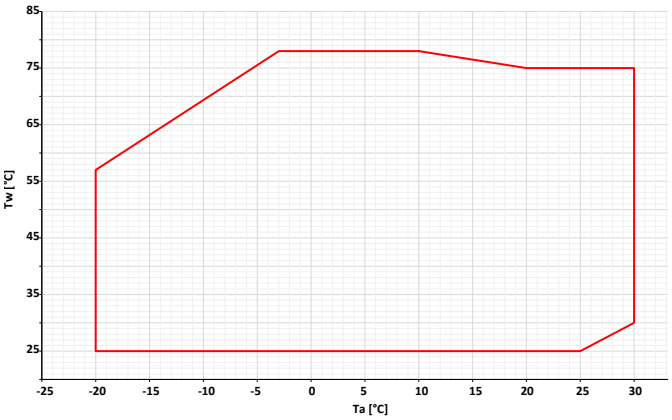


### DHW

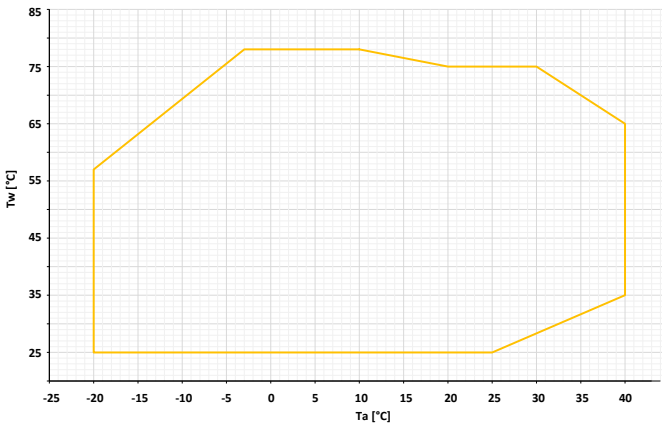


### Cold

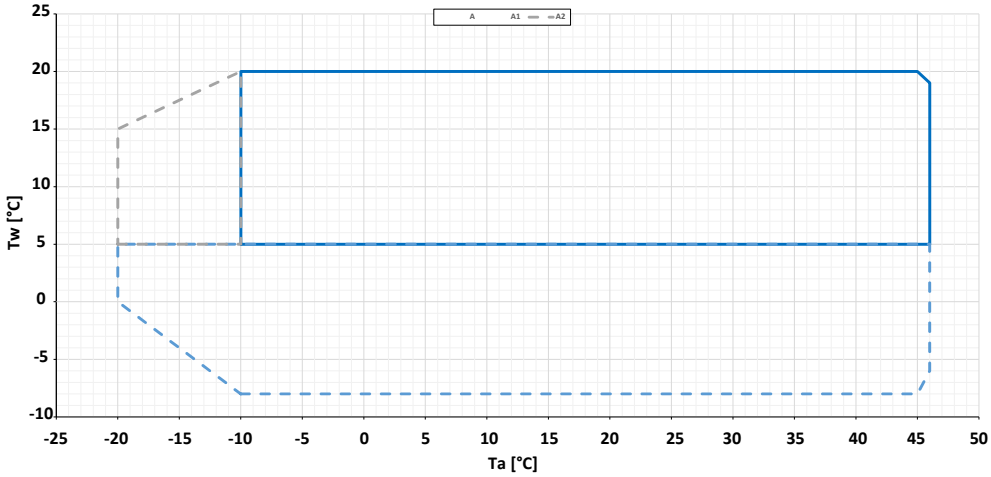


A = HWA2-AH cooling
A1 = HWA2-AH BT
A2 = HWA2-AH with EC-CC accessory (condensation control down to -20°C)

## Accessories

### Factory-installed

- **KA1 *** – Antifreeze heater for heat exchanger and pump (if present) – electric heating element installed on the front face of the plate heat exchanger, which is activated when the water temperature inside the exchanger falls below +4°C, and electric heating element that protects the pump motor at low temperatures.
- **KA4*** - Electric heater located on the front side of the plate heat exchanger, activated when the water temperature drops below +4°C, and heater that protects the pump motor at low temperatures. It also includes heaters in the drain pans that collect water from coil defrosting, preventing ice formation.
- **SL ** –** The silenced unit features an innovative acoustic insulation applied to the compressor compartment panels. This system significantly reduces noise during operation, improving the acoustic comfort of the surrounding environment.
- **SSL ** –** The super-silenced unit combines the acoustic insulation applied to the compressor compartment panels with a special diffuser mounted on the fan. This diffuser increases its efficiency, allowing the speed to be reduced, lowering the sound pressure level and optimizing energy consumption.
- **PS *** –** Reversible heat pump, heating-only version with standard head.
- **PSAP *** –** Reversible heat pump, high head pump-only version.
- **PSI*** -** AC circulation pump controlled by an external inverter installed in the electrical panel.
- **PSIAP*** -** High-head AC circulation pump controlled via an external inverter installed in the electrical panel.
- **PD *** –** Reversible heat pump, dual-pump version with standard head.
- **PDAP *** –** Reversible heat pump, dual high-head pump version.
- **PS-SI *** –** Reversible heat pump, pump-only version with standard head + tank and expansion vessel.
- **PSAP-SI *** –** Reversible heat pump, high-head pump only version + tank and expansion vessel.
- **PSI-SI*** -** AC circulation pump controlled via external inverter installed in the electrical panel + tank and expansion vessel.
- **PSIAP-SI*** -** High head AC circulation pump controlled via

** Accessories not usable simultaneously
*** Accessories not usable simultaneously

external inverter installed in the electrical panel + tank and expansion vessel.

- **PD-SI ***** – Reversible heat pump, dual-pump version with standard head + tank and expansion vessel.
- **PDAP-SI ***** – Reversible heat pump, high-head double pump version + tank and expansion vessel.
- **TR2** - Cu/Al coil with Silver Line surface treatment. Finned coil heat exchangers with copper tubes and aluminium fins, subjected to treatment with a special polyurethane-based paint for corrosion protection. The protection provides the coil with flexibility to withstand thermal contraction and expansion, UV resistance, and makes it dirt-repellent. The treatment ensures coil protection under virtually all environmental conditions: from marine to rural environments, from industrial to urban areas. For specific instructions on cleaning coils treated in this way, refer to the relevant chapter in the user-installer manual. The treatment withstands 6000 h according to ASTM B117.
- **TR2C4** - Anti-corrosion treatment on coil and sheet metal – includes a TR2-type treatment on the coil and, in addition, the hot-dip galvanized steel panels are painted to make them suitable for installing the unit in C4H environments, in accordance with UNI EN 12944. The external fastening hardware is made of AISI 304 material, class A2.
- **C4** - The hot-dip galvanized steel panels are painted to ensure compliance with installation in C4H-class environments, in accordance with UNI EN 12944. The external fastening hardware is made of AISI 304 stainless steel (A2 class), ensuring corrosion resistance and long-term durability.
- **BT** - The BT accessory allows the operating range of the water temperature to be extended down to -8°C. In this case, it is mandatory to use a water-glycol mixture suitable for the operating point and for the minimum temperature reached by the system.
- **EC-CC** - Modulating EC fan. Includes CC function, condensing pressure control down to -20°C.
- **GR2** - Battery compartment anti-intrusion kit – wire mesh to prevent the entry of foreign objects into the coil and to protect the coil from accidental contact by people or objects.
- **GR4** - Anti-intrusion kit for hydraulic circuit compartment and anti-intrusion kit for coil compartment.
- **SS** - Soft starter – electronic static starter for inrush current management, installed inside the electrical panel; it allows a reduction of inrush current and of mechanical wear on the motor windings.
- **KS** - Lifting bracket kit – facilitates lifting and positioning of the unit.
- **MN** - External pressure gauges for quick monitoring of high and low pressure; four gauges in dual-circuit units.

## Provided separately

- **AG** - Rubber anti-vibration kit – designed to prevent vibration transmission to the structure; they are to be installed beneath the unit, in the designated mounting holes.
- **AM -** Spring anti-vibration kit – designed to prevent transmission of vibrations to the structure; they must be installed underneath the unit, in the designated holes.
- **FY** - Y-strainer – contains a stainless steel mesh screen (500 µm filtration) that collects solid materials present in the water. Filtration prevents blockage and/or damage to the devices installed downstream of the strainer. Alternatively, it is possible to install a dirt separator that ensures a filtration level not greater than 1 mm (in this case, it is no longer necessary to install the Y-strainer).
- **SAS** - Remote system probe.
- **TQE** - Rainproof cover for electrical panel.
- **RV** - Grooved coupling joint kit with carbon steel pipe stubs, complete with grooved connection to the unit and flanged connection with gasket for direct connection to the system.
- **ISK**** - USB/RS485 serial converter – interface device capable of reading and writing control registers via the RS485 standard and converting them to a USB port that can be connected to any supervision system.
- **LNC**** - LAN-Wi-Fi router – device that allows the unit to be connected to a local network via Ethernet cable or Wi-Fi coverage for remote monitoring.
- **OVPN**** - 4G LAN-Wi-Fi router with VPN tunnelling – a device that allows you to connect the unit remotely to an industrial router using the secure OPENVPN service.
- **Hi-TV415**** - Colour touchscreen remote control for the centralised management of a cascade of chillers/heat pumps, up to a maximum of 7 units.

** Accessories not usable simultaneously
*** Accessories not usable simultaneously

**Hi-TV415**
Touch screen remote controller for cascade management (max 7 units)
ACCESSORY

| HWA2-AH | | | 0270 | 0280 | 0290 | 04110 |
|---|---|---|---|---|---|---|
| Cooling | Cooling capacity (1) | kW | 61,5 | 67,2 | 72,8 | 94,7 |
| | Total absorbed power (1) | kW | 19,7 | 21,5 | 23,5 | 33,4 |
| | EER (1) | W/W | 3,12 | 3,13 | 3,10 | 2,84 |
| | Cooling capacity (2) | kW | 73,9 | 81,2 | 86,3 | 116,0 |
| | Total absorbed power (2) | kW | 20,2 | 22,0 | 24,7 | 35,2 |
| | EER (2) | W/W | 3,66 | 3,69 | 3,49 | 3,30 |
| | SEER (5) | W/W | 4,40 | 4,60 | 4,29 | 4,31 |
| | Water flow rate (1) | l/s | 2,94 | 3,21 | 3,48 | 4,52 |
| | Pressure drops in the heat exchanger on the user side (1) | kPa | 19,7 | 22,7 | 25,9 | 16,7 |
| Heating | Heating capacity (3) | kW | 72,7 | 78,5 | 84,4 | 116,0 |
| | Total absorbed power (3) | kW | 16,8 | 18,6 | 20,4 | 29,1 |
| | COP (3) | W/W | 4,33 | 4,22 | 4,14 | 3,99 |
| | Heating capacity (4) | kW | 65,0 | 71,4 | 76,2 | 105,0 |
| | Total absorbed power (4) | kW | 23,2 | 24,8 | 27,5 | 36,3 |
| | COP (4) | W/W | 2,80 | 2,88 | 2,77 | 2,89 |
| | Heating capacity (11) | kW | 61,0 | 67,1 | 72,6 | 103,0 |
| | Total absorbed power (11) | kW | 26,7 | 28,5 | 31,5 | 44,4 |
| | COP (11) | W/W | 2,28 | 2,35 | 2,30 | 2,32 |
| | SCOP (6) | W/W | 4,00 | 4,16 | 3,87 | 3,70 |
| | Water flow rate (3) | l/s | 3,47 | 3,75 | 4,03 | 5,54 |
| | Pressure drops in the user-side heat exchanger (3) | kPa | 23,6 | 26,8 | 30,2 | 23,7 |
| | Energy efficiency water 35°C/55°C | class | A++/A++ | A++/A++ | A++/A++ | NA |
| Compressor | Compressor type | | SCROLL | | | |
| | Refrigerant oil (type) | | POE 160SZ | | | |
| | No. of compressors | No. | 2 | 2 | 2 | 4 |
| | Standard capacity steps | No. | 2 | 3 | 2 | 5 |
| | Oil loading | l | 6,6 | 6,6 | 6,6 | 13,2 |
| | Refrigerant circuits | No. | 1 | 1 | 1 | 2 |
| Refrigerant | Type | | R290 | | | |
| | Refrigerant charge (4) Circuit 1 | kg | 6,5 | 6,5 | 6,5 | 4,9 |
| | Refrigerant charge (4) Circuit 2 | kg | - | - | - | 4,9 |
| | Tons of $CO_2$ equivalent (4) | Ton | 0,0001 | 0,0001 | 0,0001 | 0,0002 |
| | Design pressure (high/low) | bar | 33/0,7 | 33/0,7 | 33/0,7 | 33/0,7 |
| Outdoor zone fans | Fan types | | AXIAL - EC | | | |
| | No. of fans | No. | 2 | 2 | 2 | 2 |
| | Rated power (1) | kW | 1,9 | 1,9 | 1,9 | 1,7 |
| | Maximum power | kW | 2,55 | 2,55 | 2,55 | 2,00 |
| | Maximum absorbed current | A | 4 | 4 | 4 | 3,1 |
| | Standard air flow rate | m³/h | 40000 | 40000 | 40000 | 40000 |
| Internal heat exchanger | Internal heat exchanger type | | PHE – PLATE TYPE | | | |
| | No. of indoor heat exchangers | No. | 1 | 1 | 1 | 1 |
| | Water content | l | 5,30 | 5,30 | 5,30 | 8,30 |
| Hydraulic circuit | Maximum water-side pressure | bar | 6 | 6 | 6 | 6 |
| | Maximum pressure of hydronic kit (safety valve setting) | bar | 6 | 6 | 6 | 6 |
| | Water connections | | 2" | 2" | 2" | 2" 1/2 |
| | Minimum system water content (8) | l | 394 | 466 | 456 | 302 |
| Sound data | Sound power (9) | dB (A) | 85 std/ 83 SL/ 81 SSL | 86 std/ 84 SL/ 82 SSL | 86 std/ 84 SL/ 82 SSL | 87 std/ 85 SL/ 83 SSL |
| | Sound pressure (10) | dB (A) | 53 std/ 51 SL/ 49 SSL | 54 std/ 52 SL/ 50 SSL | 54 std/ 52 SL/ 50 SSL | 55 std/ 53 SL/ 51 SSL |
| Electrical data | Power supply | | 400V/3P/50Hz | | | |
| | Maximum input power, version without accessories | kW | 42,4 | 45,6 | 48,8 | 64,0 |
| | Maximum current absorbed, version without accessories | A | 64,2 | 71,0 | 77,8 | 102,4 |
| | Maximum inrush current for version without accessories | A | 327,0 | 366,0 | 405,0 | 241,8 |
| Dimensions and weights | Standard length / with tank | mm | 2570 / 3280 | 2570 / 3280 | 2570 / 3280 | 3960 / 4670 |
| | Depth | mm | 1135 | 1135 | 1135 | 1135 |
| | Standard height / SSL | mm | 2250 / 2300 | 2250 / 2300 | 2250 / 2300 | 2250 / 2300 |
| | Net transport weight (standard version) | kg | 1070 | 1075 | 1080 | 1270 |
| | Operating weight (standard version) | kg | 1080 | 1085 | 1090 | 1280 |

(1) Internal heat exchanger water temperature = 12/7°C, air entering the external heat exchanger 35°C.
(2) Internal heat exchanger water temperature = 23/18°C, air entering the external heat exchanger 35°C.
(3) Internal heat exchanger water temperature = 30/35°C, entering air temperature at the external heat exchanger = 7°C D.B./6°C W.B; EC fans
(4) Internal heat exchanger water temperature = 47/55°C, entering air temperature at the external heat exchanger = 7°C D.B./6°C W.B; EC fans
(11) Internal heat exchanger water temperature = 55/65°C, entering air temperature at the external heat exchanger = 7°C D.B./6°C W.B.; EC fans
(5) Cooling: low temperature, variable output, constant flow rate.
(6) Average climatic conditions; Tbiv = -4°C, internal heat exchanger water temperature = 30/35°C; EC fans
(7) Indicative data, subject to change. For the correct data, always refer to the technical nameplate on the unit.
(8) The calculated value of minimum system water volume does not take into account the water volume contained in the internal heat exchanger (evaporator). For applications with low outdoor air temperatures or low required average loads, the minimum system water volume is obtained by doubling the indicated value.
(9) Condition (3); value determined on the basis of measurements carried out in accordance with standard UNI EN ISO 9614-2, in compliance with the requirements of Eurovent certification.
(10) Value calculated from the sound power level using ISO 3744:2010, referred to a distance of 10 m from the unit.
The stated performance data are indicative and may be subject to variation. The capacities declared at points (1), (2), (3), (4) refer to the instantaneous output in accordance with EN 14511. The data declared at points (5), (6) are determined in accordance with UNI EN 14825.

Preliminary data

| HWA2-AH | | | 04120 | 04140 | 04155 | 04170 |
|---|---|---|---|---|---|---|
| **Cooling** | Cooling capacity (1) | kW | 107,0 | 111,6 | 123,2 | 134,0 |
| | Total absorbed power (1) | kW | 36,9 | 39,2 | 42,9 | 46,0 |
| | EER (1) | W/W | 2,90 | 2,85 | 2,87 | 2,91 |
| | Cooling capacity (2) | kW | 131,0 | 146,1 | 161,3 | 168,9 |
| | Total absorbed power (2) | kW | 39,1 | 42,0 | 45,7 | 51,5 |
| | EER (2) | W/W | 3,35 | 3,48 | 3,53 | 3,28 |
| | SEER (5) | W/W | 4,58 | 3,5 ÷ 4 | 3,5 ÷ 4 | 3,5 ÷ 4 |
| | Water flow rate (1) | l/s | 5,11 | 5,33 | 5,89 | 6,40 |
| | Pressure drops in the heat exchanger on the user side (1) | kPa | 15,30 | 15,9 | 16,5 | 17,2 |
| **Heating** | Heating capacity (3) | kW | 129,0 | 140,2 | 154,7 | 169,3 |
| | Total absorbed power (3) | kW | 31,0 | 35,4 | 38,0 | 40,7 |
| | COP (3) | W/W | 4,16 | 3,96 | 4,08 | 4,16 |
| | Heating capacity (4) | kW | 118,0 | 125,5 | 139,5 | 153,3 |
| | Total absorbed power (4) | kW | 39,4 | 46,7 | 50,2 | 53,8 |
| | COP (4) | W/W | 2,99 | 2,69 | 2,78 | 2,85 |
| | Heating capacity (11) | kW | 115,0 | 120,6 | 134,0 | 147,2 |
| | Total absorbed power (11) | kW | 47,9 | 53,9 | 58,0 | 62,2 |
| | COP (11) | W/W | 2,40 | 2,24 | 2,31 | 2,37 |
| | SCOP (6) | W/W | 3,90 | 3,5 ÷ 4 | 3,5 ÷ 4 | 3,5 ÷ 4 |
| | Water flow rate (3) | l/s | 6,16 | 6,70 | 7,39 | 8,09 |
| | Pressure drops in the user-side heat exchanger (3) | kPa | 21,0 | 24,3 | 25,3 | 26,4 |
| | Energy efficiency water 35°C/55°C | class | NA | NA | NA | NA |
| **Compressor** | Compressor type | | SCROLL | | | |
| | Refrigerant oil (type) | | POE 160SZ | | | |
| | No. of compressors | No. | 4 | 4 | 4 | 4 |
| | Standard capacity steps | No. | 4 | 4 | 6 | 4 |
| | Oil loading | l | 13,2 | 13,2 | 13,2 | 13,2 |
| | Refrigerant circuits | No. | 2 | 2 | 2 | 2 |
| **Refrigerant** | Type | | R290 | | | |
| | Refrigerant charge (4) Circuit 1 | kg | 4,9 | 6,4 | 6,5 | 6,6 |
| | Refrigerant charge (4) Circuit 2 | kg | 4,9 | 6,4 | 6,5 | 6,6 |
| | Tons of $CO_2$ equivalent (4) | Ton | 0,0002 | 0,0003 | 0,0003 | 0,0003 |
| | Design pressure (high/low) | bar | 33/0,7 | 33/0,7 | 33/0,7 | 33/0,7 |
| **Outdoor zone fans** | Fan types | | AXIAL - EC | | | |
| | No. of fans | No. | 2 | 4 | 4 | 4 |
| | Rated power (1) | kW | 1,7 | 1,9 | 1,9 | 1,9 |
| | Maximum power | kW | 2,00 | 2,55 | 2,55 | 2,55 |
| | Maximum absorbed current | A | 3,1 | 4 | 4 | 4 |
| | Standard air flow rate | m³/h | 40000 | 80000 | 80000 | 80000 |
| **Internal heat exchanger** | Internal heat exchanger type | | PHE – PLATE TYPE | | | |
| | No. of indoor heat exchangers | No. | 1 | 1 | 1 | 1 |
| | Water content | l | 8,30 | 12,60 | 13,90 | 15,10 |
| **Hydraulic circuit** | Maximum water-side pressure | bar | 6 | 6 | 6 | 6 |
| | Maximum pressure of hydronic kit (safety valve setting) | bar | 6 | 6 | 6 | 6 |
| | Water connections | | 2" 1/2 | 2" 1/2 | 2" 1/2 | 2" 1/2 |
| | Minimum system water content (8) | l | 368 | TBD | TBD | TBD |
| **Sound data** | Sound power (9) | dB (A) | 88 std/ 86 SL/ 84 SSL | TBD | TBD | TBD |
| | Sound pressure (10) | dB (A) | 56 std/ 54 SL/ 52 SSL | TBD | TBD | TBD |
| **Electrical data** | Power supply | | 400V/3P/50Hz | | | |
| | Maximum input power, version without accessories | kW | 68,8 | 77,5 | 84,0 | 90,5 |
| | Maximum current absorbed, version without accessories | A | 109,8 | 123,4 | 137,0 | 150,6 |
| | Maximum inrush current for version without accessories | A | 256,8 | TBD | TBD | TBD |
| **Dimensions and weights** | Standard length / with tank | mm | 3960 / 4670 | 2810 | 2810 | 2810 |
| | Depth | mm | 1135 | 2320 | 2320 | 2320 |
| | Standard height / SSL | mm | 2250 / 2300 | 2362 / 2369 | 2362 / 2369 | 2362 / 2369 |
| | Net transport weight (standard version) | kg | 1280 | 2050 | 2065 | 2080 |
| | Operating weight (standard version) | kg | 1290 | 2055 | 2070 | 2085 |

(1) Internal heat exchanger water temperature = 12/7°C, air entering the external heat exchanger 35°C.
(2) Internal heat exchanger water temperature = 23/18°C, air entering the external heat exchanger 35°C.
(3) Internal heat exchanger water temperature = 30/35°C, entering air temperature at the external heat exchanger = 7°C D.B./6°C W.B; EC fans
(4) Internal heat exchanger water temperature = 47/55°C, entering air temperature at the external heat exchanger = 7°C D.B./6°C W.B; EC fans
(11) Internal heat exchanger water temperature = 55/65°C, entering air temperature at the external heat exchanger = 7°C D.B./6°C W.B.; EC fans
(5) Cooling: low temperature, variable output, constant flow rate.
(6) Average climatic conditions; Tbiv = -4°C, internal heat exchanger water temperature = 30/35°C; EC fans
(7) Indicative data, subject to change. For the correct data, always refer to the technical nameplate on the unit.
(8) The calculated value of minimum system water volume does not take into account the water volume contained in the internal heat exchanger (evaporator). For applications with low outdoor air temperatures or low required average loads, the minimum system water volume is obtained by doubling the indicated value.
(9) Condition (3); value determined on the basis of measurements carried out in accordance with standard UNI EN ISO 9614-2, in compliance with the requirements of Eurovent certification.
(10) Value calculated from the sound power level using ISO 3744:2010, referred to a distance of 10 m from the unit.
The stated performance data are indicative and may be subject to variation. The capacities declared at points (1), (2), (3), (4) refer to the instantaneous output in accordance with EN 14511. The data declared at points (5), (6) are determined in accordance with UNI EN 14825.

Preliminary data

# Dimensional Drawings

## HWA2-AH 0270 / 0280 / 0290

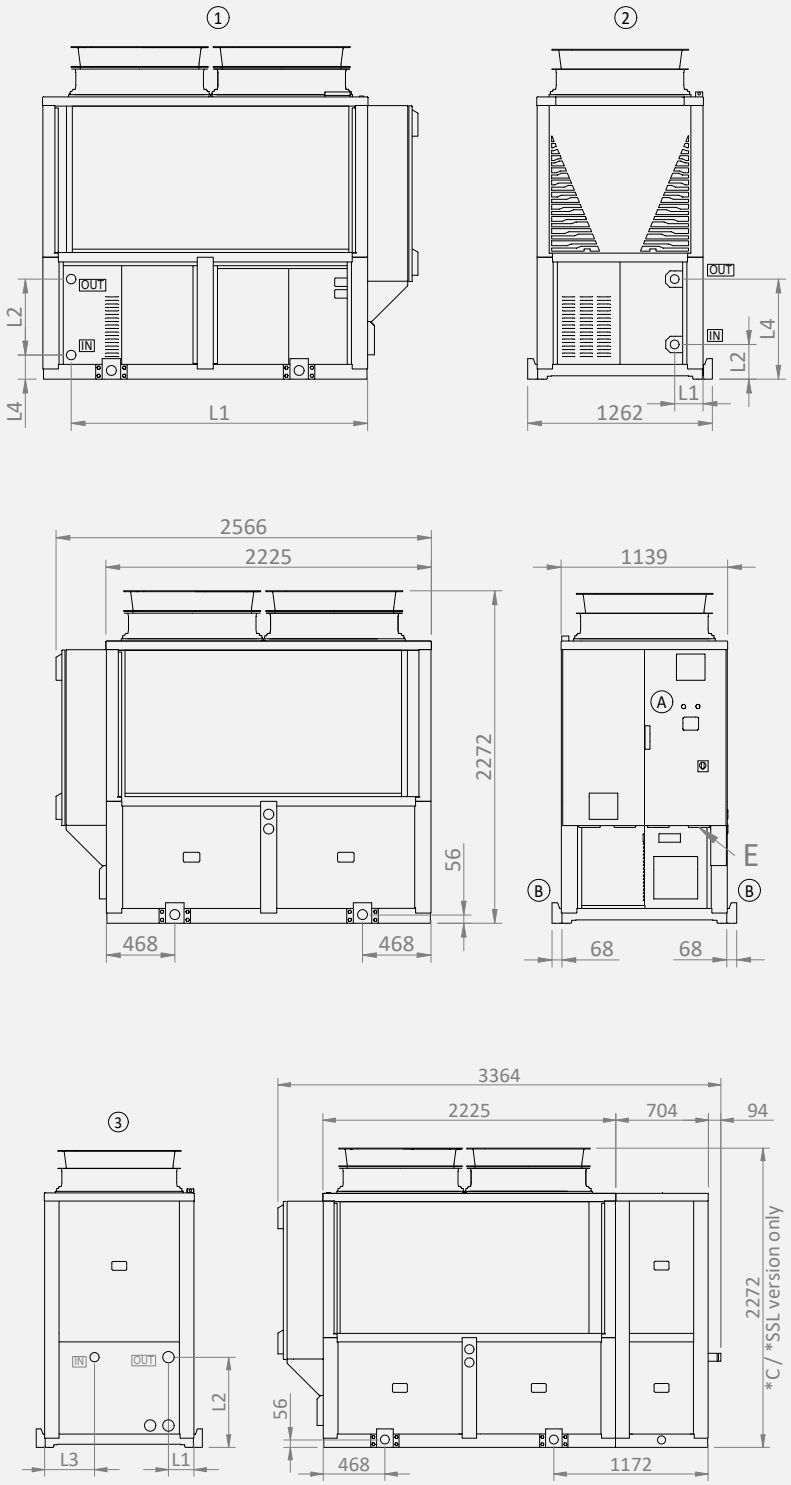


| Version | L1 | L2 | L3 | L4 | IN / OUT | Version height -SSL / -C |
|---|---|---|---|---|---|---|
| Standard | 2026 | 519 | - | 165 | 2" Victaulic | 2295 |
| Single - Dual pump | 194 | 236 | - | 685 | | 2295 |
| Single - Dual pump with tank | 194 | 685 | 380 | - | | 2295 |

A: Electrical panel
B: Lifting bracket
E: Power supply input

* Accessory
** Standard version height; for -SSL / -C: see table

Dimensions in mm

# Price list

| HWA2-AH | | | 270 | 280 | 290 |
|---|---|---|---|---|---|
| HWA2-AH | Reversible heat pump | € | 43.040 | 43.701 | 44.172 |

| FACTORY-MOUNTED ACCESSORY MANDATORY: Standard EC fan for ERP regulation to be added to the unit price | | | | | |
|---|---|---|---|---|---|
| EC-CC | EC fan (included in BT, SSL versions). DC control included | € | 1.024 | 1.024 | 1.024 |
| **FACTORY-MOUNTED ACCESSORIES** | | | | | |
| BT | Cooling only BT version (EC-CC accessory already included) | € | 2.142 | 2.142 | 2.163 |
| KA1 | Adhesive heater for heat exchanger + pump heater (if present).<br>Not available for units with tank | € | 253 | 253 | 253 |
| KA4 | Exchanger heater + pump (if present) + tray | € | 612 | 612 | 612 |
| GR2 | Anti-intrusion battery compartment kit | € | 1.388 | 1.388 | 1.388 |
| GR4 | Anti-intrusion kit for hydraulic circuit compartment and anti-intrusion kit for batteries compartment | € | 2.602 | 2.602 | 2.602 |
| PS | Standard head pump | € | 3.998 | 3.998 | 3.998 |
| PSI | Standard head pump controlled by an inverter installed in the electrical panel | € | 4.555 | 4.555 | 4.555 |
| PSAP | High-head pump | € | 4.457 | 4.457 | 4.457 |
| PSIAP | High-head pump controlled by an inverter installed in the electrical panel | € | 5.012 | 5.012 | 5.012 |
| PD | Twin pump, standard head | € | 7.259 | 7.259 | 7.259 |
| PDAP | Dual high-head pump | € | 8.109 | 8.109 | 8.109 |
| PS-SI | Standard head pump + tank | € | 9.275 | 9.275 | 9.275 |
| PSI-SI | Standard head pump controlled by an inverter installed in the electrical panel + tank and expansion vessel | € | 9.790 | 9.790 | 9.790 |
| PSAP-SI | High head pump + tank | € | 9.700 | 9.700 | 9.700 |
| PSIAP-SI | High-head pump with inverter control installed in the electrical panel + tank and expansion vessel | € | 10.216 | 10.216 | 10.216 |
| PD-SI | Dual standard-head pump + tank | € | 12.960 | 12.960 | 12.960 |
| PDAP-SI | Double high-head pump + tank | € | 13.810 | 13.810 | 13.810 |
| KS | Lifting bracket kit | € | 731 | 731 | 731 |
| MN | External pressure gauges | € | 236 | 236 | 655 |
| SS | Soft starter | € | 2.002 | 2.002 | 2.002 |
| SL | Silenced version | € | 811 | 811 | 811 |
| SSL | Ultra-silent version<br>(EC-CC accessory is already included for these versions) | € | 4.081 | 4.081 | 4.081 |
| TR2 | Cu/Al coil with anti-corrosion treatment | € | 3.475 | 3.475 | 3.475 |
| TR2C4 | Cu/Al coil and sheet metal with anti-corrosion treatment | € | Contact our office | | |
| C4 | Protective treatment | € | Contact our office | | |
| **ACCESSORIES SUPPLIED SEPARATELY** | | | | | |
| AG | Rubber anti-vibration mounts | € | 749 | 749 | 749 |
| AM | Spring anti-vibration mounts | € | 1.929 | 1.929 | 1.929 |
| FY | Y-strainer | € | 180 | 180 | 180 |
| Hi-TV415 | Touchscreen remote control | € | 659 | 659 | 659 |
| RV | Starter kit consisting of 2 jaws and 2 plain stubs | € | Contact our office | | |
| SAS | Remote sensor | € | 48 | 48 | 48 |
| TQE | Rain cover for electrical control panel | € | 309 | 309 | 309 |

# HWA1-A 0140÷0285
# HWA1-A/H 0140÷0285 *

## Water chiller and heat pump reversible air/water

40 kW÷85 kW

(*) Eurovent certified product range

The water chillers and air/water heat pumps have been designed for commercial and industrial applications; they are very compact yet equipped with large-surface air-side heat exchangers, ensuring high efficiency with EER and COP among the highest in their category.

The use of high-efficiency, particularly robust scroll compressors together with the oil recovery and distribution system used on tandem circuits ensures high reliability and consistent performance.

MADE IN ITALY | R410A REFRIGERANT 2088 GWP | PLATE HEAT EXCHANGER | SCROLL COMPRESSORS

**Carpentry**: all units in the series are manufactured from hot-dip galvanized sheet metal and painted with polyurethane powder coatings baked at 180°C to ensure maximum resistance to atmospheric agents.

**Refrigerant circuit**: made using components from leading international manufacturers and in compliance with UNI EN 13134. The refrigerant used is R410A. The refrigerant circuit in its basic version includes: electronic expansion valve, liquid separator, liquid receiver, service valves for maintenance and control, safety device compliant with the PED directive (high-pressure switch), safety valve for the refrigerant, pressure transducers to accurately measure evaporation and condensation pressures, high-capacity drier filter to prevent throttling valve blockages and eliminate any moisture present in the circuit, and liquid sight glass for checking the refrigerant charge. In heat pump versions, a 4-way cycle-reversing valve and an outdoor air temperature sensor are also provided.

**Compressors**: scroll type, specifically designed to operate with R410A, mounted on rubber anti-vibration mounts. The crankcase heater, where present, is activated when the compressor is stopped and is disabled when the compressor restarts.

**Air-side heat exchangers**: for chillers it is made entirely of aluminum using the new microchannel technology, which makes it possible to reduce
significantly both the air-side pressure drops and the refrigerant charge, while at the same time ensuring a higher heat exchange capacity for the same frontal surface compared with traditional heat exchangers. In the heat pump versions, the heat exchanger is a finned coil with fin spacing optimized for operation at low temperatures.

**Fan**: axial type with airfoil-profile blades. Supplied complete with protective grille and inlet/outlet nozzles with double flared profile, specially shaped to increase efficiency and reduce noise.

**User-side heat exchangers**: brazed-plate type, made of AISI 316 stainless steel and factory-insulated with closed-cell material; they can be equipped with an electric antifreeze heater. Each evaporator is protected by a temperature probe used as an antifreeze protection sensor that activates the circulator (if present), even when the unit is switched off, if the conditions set on the controller occur.

**Control system**: all units are equipped with a microprocessor-based control board with superheat control logic managed according to the signals sent by the pressure transducers and temperature probes. The CPU also controls the following functions: water temperature regulation, antifreeze protection, compressor timing and start-up, management of fan and circulation pumps (if present), alarm reset, alarm indication and operating status LEDs. On request, the microprocessor can be connected to remote BMS control systems. With the addition of the expansion module, it is possible to control an external 3-way valve, either modulating or 2-position, via the controller.

## Operating Areas

**Hot**

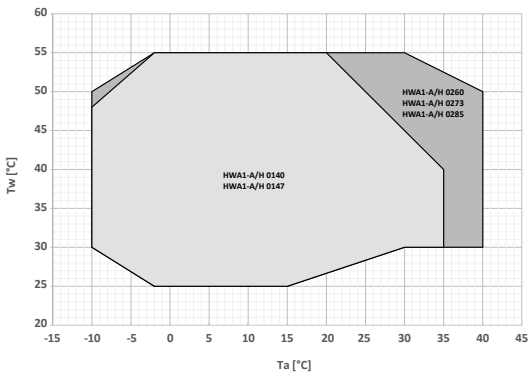


**Cold**

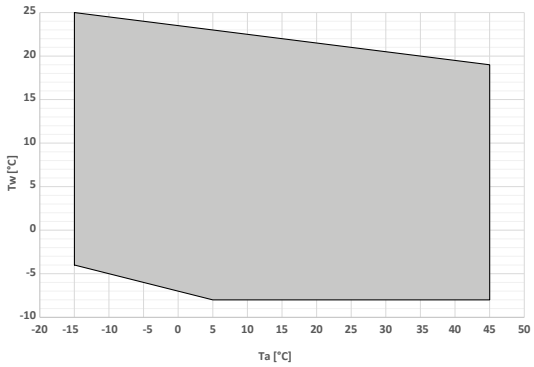


Tw: water temperature - Ta: outdoor air temperature

# Accessories

## Factory-installed

- **KA** - Anti-freeze heater on: heat exchanger and base. Electric heater installed on the front side of the plate heat exchanger, which is activated when the water temperature inside the exchanger falls below +4°C. A heating cable is installed on the base to melt any ice that may form. (HWA1-A/H).
- **KA1** - Anti-freeze heater on heat exchanger. Electric heater installed on the front face of the plate heat exchanger, which is activated when the water temperature inside the exchanger falls below +4°C. (HWA1-A).
- **DSFR** - Three-phase relay for overvoltage and undervoltage monitoring + phase loss/sequence. Indicates the presence of all three phases in the correct sequence and whether all three line-to-line voltages are within the set limits. It is possible to set the overvoltage and undervoltage thresholds separately.
- **SL** ** - Silenced version. The silenced unit (equipped with the SL accessory) features an innovative thermo-acoustic jacket on the compressors. This insulation allows a noise reduction of up to 10% at certain compressor rotation frequencies. The special multi-layer structure provides thermal insulation that, at low temperatures, reduces losses by up to 2% compared to standard insulation.
- **SSL** ** - Super silenced version. The super silenced unit (equipped with the SSL accessory) includes, in addition to the thermo-acoustic jacket on the compressors, a special fan with diffuser. This component increases the fan efficiency, allowing its speed to be reduced, thereby lowering sound pressure and energy consumption. In this way it is possible to save significant amounts of electrical energy for each fan.
- **C ** – Ductable version. With the ductable version, the diffuser is used to take advantage of the higher available pressure of the fan and, if required, to duct the air discharge.
- **C(S)** ** - Ductable version with jackets. In addition to the ductable version, thermo-acoustic jackets are installed on the compressors.
- **EC** - Modulating EC fan (standard for size 0285 cooling only, size 0273–0285 heat pump). Includes the CC function, condensation control down to -15°C. Mandatory accessory for cooling-only versions, comfort applications, EU market.
- **PS** - Fixed-speed AC circulation pump.
- **CM** - BMS connectivity setup – ModBus protocol included – accessory that enables the connection of the unit to external controllers via serial cable with RS-485 electrical standard and ModBus RTU protocol.
- **GI** - Hardware expansion module. Additional expansion board installed at the factory that increases the resources (I/O) available in the system.
- **TR1** - Microchannel coil with Aero surface treatment. The treatment consists of spraying a special water-based coating made of new resins with very high chemical resistance. The product is flexible to withstand thermal contractions and expansions, UV-resistant, dirt-repellent, mechanically resistant, with very limited heat transfer losses and practically no effect on air-side pressure drops. The treatment withstands 6000 h according to ASTM B117. (HWA1-A).
- **TR2** - Coil anti-corrosion treatment – thanks to this treatment, the coil becomes flexible to withstand thermal contractions and expansions, mechanically resistant, UV-protected and dirt-repellent. Heat transfer losses are very limited. The treatment ensures coil protection under virtually all environmental conditions: from coastal to rural areas, from industrial to urban zones. The treatment withstands 6,000 hours according to ASTM B117. (HWA1-A/H).
- **IM** - Circuit breakers on compressors and fans – overcurrent switches applied to compressors and fans, protecting the components from faults caused by possible current spikes.

## Provided separately

- **SAS** - Remote system probe. The remote system probe controls the heat pump temperature only during the compressor start-up phase; shutdown is managed by the probe installed on the heat pump flow line.
- **AG** - Rubber anti-vibration kit – designed to prevent vibration transmission to the structure; they are to be installed beneath the unit, in the designated mounting holes.
- **FY** - Y-strainer – contains a stainless steel mesh screen (500 µm filtration) that collects solid materials present in the water. Filtration prevents blockage and/or damage to the devices installed downstream of the strainer. Alternatively, it is possible to install a dirt separator that ensures a filtration level not greater than 1 mm (in this case, it is no longer necessary to install the Y-strainer).
- **i-CR2**** - Wall-mounted remote control – Modbus remote controller with negative LCD and capacitive keys. The device is intended to be used as a remote unit keypad with local temperature sensing and replicates the functions of the on-board unit controller.
- **Hi-TV415**** - Colour touchscreen remote control for the centralised management of a cascade of chillers/heat pumps, up to a maximum of 7 units.

** Accessories not usable simultaneously

**i-CR2**
Wall-mounted remote control
ACCESSORY

**Hi-TV415**
Touch screen remote controller for cascade management (max 7 units)
ACCESSORY

| HWA1-A | | | 0140 | 0147 | 0260 | 0273 | 0285 |
|---|---|---|---|---|---|---|---|
| Cooling | Cooling capacity (1) | kW | 39,7 | 46,8 | 60,8 | 73,3 | 86,5 |
| | Power input (1) | kW | 12,5 | 15,1 | 19,3 | 24,8 | 29,3 |
| | EER (1) | W/W | 3,16 | 3,11 | 3,16 | 2,95 | 2,96 |
| | Cooling capacity (2) | kW | 54,4 | 63,5 | 81,9 | 99,4 | 116,3 |
| | Power input (2) | kW | 14,3 | 17,0 | 21,9 | 28,0 | 33,3 |
| | EER. (2) | W/W | 3,80 | 3,74 | 3,75 | 3,55 | 3,50 |
| | SEER (5) | W/W | 3,80 | 3,80 | 4,05 | 3,98 | 4,14 |
| | Cooling capacity (8) | kW | 22,7 | 27,0 | 36,2 | 42,9 | 51,1 |
| | Total absorbed power (8) | kW | 11,4 | 13,5 | 16,9 | 22,1 | 25,7 |
| | EER (8) | W/W | 1,99 | 2,01 | 2,14 | 1,94 | 1,99 |
| | Water flow rate (1) | l/s | 1,90 | 2,24 | 2,91 | 3,51 | 4,14 |
| | Pressure drops in the heat exchanger on the user side (1) | kPa | 54,08 | 51,68 | 56,79 | 46,43 | 50,41 |
| Compressor | Type | | Scroll | | | | |
| | Number | | 1 | 1 | 2 | 2 | 2 |
| | Standard capacity steps | | 1 | 1 | 2 | 3 | 3 |
| | Refrigerant circuits | | 1 | 1 | 1 | 1 | 1 |
| | Oil (type, quantity) | dm³ | BVC32 / 2,7 | | BVC32 / 5,4 | | |
| Refrigerant | Type | | R410A | | | | |
| | Refrigerant quantity (4) | kg | 7,8 | 7,8 | 12,8 | 13,4 | 14,6 |
| | Tons of $CO_2$ equivalent (4) | Ton | 16,3 | 16,3 | 26,7 | 28 | 30,5 |
| | Refrigerant quantity BT model (4) | kg | 8,5 | 8,5 | 12,8 | 13,4 | 14,6 |
| | Tons of CO2 equivalent BT version (4) | Ton | 17,8 | 17,8 | 26,7 | 28 | 30,5 |
| | Design pressure (high/low) | MPa | 4,2/2,7 | | | | |
| Outdoor zone fans | Type | | AXIAL | | | | |
| | Number | | 1 | | | | |
| | Maximum power | kW | 1,90 | 1,90 | 1,90 | 1,85 | 3,2 |
| | Absorbed current (max) | A | 3,9 | 3,9 | 3,9 | 3,8 | 4,65 |
| | Nominal air flow rate | m3/s | 4,04 / 5,32 | 3,88 / 5,23 | 4,15 / 5,44 | 4,86 / 6,01 | 7,4 |
| | ΔP available for DUCTED VERSION | Pa | 50 | 50 | 39 | 40 | 39 |
| Internal heat exchanger | Internal heat exchanger type | | PLATE-TYPE | | | | |
| | No. of indoor heat exchangers | | 1 | 1 | 1 | 1 | 1 |
| | Water content | l | 2,03 | 2,46 | 3,21 | 4,64 | 5,25 |
| Hydronic circuit | Maximum pressure of the hydronic kit | bar | 6 | | | | |
| | Hydraulic connections | inch | 2" | | | | |
| | Minimum system water volume (5) | L | 330 | 380 | 260 | 380 | 490 |
| Sound data | Sound power (6) | dB(A) | 81 | 81 | 82 | 83 | 84 |
| | Sound pressure (7) | dB(A) | 49,3 | 49,3 | 50,3 | 51,3 | 52,3 |
| Electrical data (version without accessories) | Power supply | | 400V/3P+N+T/50Hz | | | | |
| | Maximum absorbed power | kW | 17,4 | 19,8 | 26,5 | 32,5 | N.A. |
| | Maximum absorbed current | A | 29,6 | 34,1 | 46,5 | 55,3 | N.A. |
| | Maximum inrush current | A | 156 | 183 | 155,3 | 204,3 | N.A. |
| Electrical data with EC fan (version without acces-sories) | Power supply | | 400V/3P+N+T/50Hz | | | | |
| | Maximum absorbed power | kW | 17,45 | 19,85 | 26,55 | 33,4 | 39,5 |
| | Maximum absorbed current | A | 29 | 33,5 | 45,9 | 56,5 | 66,2 |
| | Maximum inrush current | A | 148,3 | 175,3 | 147,6 | 198,3 | 237,3 |

(1) Cooling: outdoor air temperature 35°C; inlet/outlet water temperature 12/7°C.
(2) Cooling: outdoor air temperature 35°C; inlet/outlet water temperature 23/18°C.
(3) Reference water temperature for internal heat exchanger = 12/7°C.
(4) Data is indicative and subject to change. For the correct value, always refer to the technical label on the unit.
(5) The calculated value of minimum system water volume does not take into account the water volume contained in the internal heat exchanger (evaporator). For applications with low outdoor air temperature or low required average loads, the minimum system water volume is obtained by doubling the indicated value.
(6) Condition (3); value determined on the basis of measurements carried out in accordance with UNI EN ISO 9614-2, in compliance with the requirements of Eurovent certification.
(7) Value calculated from the sound power level using ISO 3744:2010, referenced to a distance of 10 m from the unit.
(8) Cooling BT version: outdoor air temperature 35°C, internal heat exchanger water temperature = -3/-8°C. Fluid treated with 35% ethylene glycol.
The performance data shown are indicative and may be subject to change. The capacities declared at points (1), (2), (8) are to be understood as referring to the instantaneous output in accordance with EN 14511. The data declared at point (3) are determined in accordance with UNI EN 14825.

| HWA1-A/H | | | 0140 | 0147 | 0260 | 0273 | 0285 |
|---|---|---|---|---|---|---|---|
| Cooling | Cooling capacity (1) | kW | 38,6 | 45,6 | 58,6 | 71,2 | 80,2 |
| | Power input (1) | kW | 13,0 | 15,7 | 19,9 | 24,6 | 29,2 |
| | EER (1) | W/W | 2,97 | 2,91 | 2,94 | 2,90 | 2,75 |
| | Cooling capacity (2) | kW | 51,8 | 60,6 | 77,7 | 94,1 | 106,4 |
| | Power input (2) | kW | 14,7 | 17,6 | 22,6 | 28,0 | 33,3 |
| | EER. (2) | W/W | 3,53 | 3,43 | 3,43 | 3,37 | 3,20 |
| | SEER (5) | W/W | 3,82 | 3,8 | 3,94 | 3,98 | 4,07 |
| | Water flow rate (1) | l/s | 1,86 | 2,20 | 2,83 | 3,41 | 3,84 |
| | Pressure drops in the heat exchanger on the user side (1) | kPa | 55,8 | 56,6 | 61,5 | 63,7 | 66,6 |
| Heating | Heating capacity (3) | kW | 43,5 | 48,2 | 64,1 | 80,9 | 88,7 |
| | Input power (3) | kW | 10,7 | 12,3 | 15,6 | 20,0 | 22,7 |
| | COP (3) | W/W | 4,05 | 3,92 | 4,10 | 4,05 | 3,90 |
| | Heating capacity (4) | kW | 42,1 | 47,8 | 63,0 | 74,9 | 84,6 |
| | Power input (4) | kW | 12,8 | 14,8 | 18,8 | 23,3 | 28,5 |
| | COP (4) | W/W | 3,28 | 3,23 | 3,35 | 3,22 | 2,97 |
| | SCOP (6) | W/W | 3,49 | 3,34 | 3,85 | 3,84 | 3,70 |
| | Water flow rate (4) | l/s | 2,02 | 2,30 | 3,03 | 3,60 | 4,07 |
| | Pressure drops in the heat exchanger on the user side (4) | kPa | 84,4 | 81,6 | 84,1 | 81,5 | 84,1 |
| | Energy efficiency water 35°C | class | A+ | A + | A++ | A++ | A+ |
| Compressor | Type | | Scroll | | | | |
| | Number | | 1 | 1 | 2 | 2 | 2 |
| | Standard capacity steps | | 1 | 1 | 2 | 3 | 3 |
| | Refrigerant circuits | | 1 | 1 | 1 | 1 | 1 |
| | Oil (type, quantity) | dm³ | BVC32 / 2,7 | | BVC32 / 5,4 | | |
| Refrigerant | Type | | R410A | | | | |
| | Refrigerant quantity (7) | | 9,98 | 9,98 | 14 | 15,25 | 15,6 |
| | Tons of CO2 equivalent (7) | | 20,8 | 20,8 | 29,2 | 31,8 | 32,6 |
| | Design pressure (high/low) | | 4,2/2,7 | | | | |
| Outdoor zone fans | Type | | AXIAL | | | | |
| | Number | | 1 | 1 | 1 | 1 | 1 |
| | Rated power (1) | kW | 1,36 | 1,66 | 1,76 | 1,89 | 2,12 |
| | Maximum power | kW | 1,95 | 1,95 | 1,95 | 3,20 | 3,20 |
| | Maximum absorbed current | A | 3,30 | 3,30 | 3,30 | 5,00 | 5,00 |
| | Nominal air flow rate | m3/s | 4,3 | 5,3 | 6,3 | 6,9 | 7,4 |
| | ΔP available for DUCTED VERSION | Pa | 41 | 44 | 35 | 33 | 35 |
| Internal heat exchanger | Internal heat exchanger type | | PLATE-TYPE | | | | |
| | No. of indoor heat exchangers | | 1 | 1 | 1 | 1 | 1 |
| | Water content | l | 2,03 | 2,46 | 3,21 | 4,64 | 5,25 |
| Hydraulic circuit | Maximum pressure of hydronic kit (safety valve setting) | bar | 6 | | | | |
| | Hydraulic connections | inch | 2" | | | | |
| | Minimum system water volume (8) | L | 330 | 380 | 260 | 380 | 490 |
| Sound data | Sound power (9) | dB(A) | 84 | 85 | 88 | 88 | 88 |
| | Sound pressure (10) | dB(A) | 52,3 | 53,3 | 56,3 | 56,3 | 56,3 |
| Electrical data (version without accessories) | Power supply | | 400V/3P+N+T/50Hz | | | | |
| | Maximum absorbed power | kW | 17,4 | 19,8 | 26,5 | N.A. | N.A. |
| | Maximum absorbed current | A | 29,6 | 34,1 | 46,5 | N.A. | N.A. |
| | Maximum inrush current | A | 156 | 183 | 155,3 | N.A. | N.A. |
| Electrical data with EC fan (version without acces-sories) | Power supply | | 400V/3P+N+T/50Hz | | | | |
| | Maximum absorbed power | kW | 17,45 | 19,85 | 26,55 | 33,4 | 39,5 |
| | Maximum absorbed current | A | 29 | 33,5 | 45,9 | 56,5 | 66,2 |
| | Maximum inrush current | A | 148,3 | 175,3 | 147,6 | 198,3 | 237,3 |

(1) Cooling: outdoor air temperature 35°C; inlet/outlet water temperature 12/7°C.
(2) Cooling: outdoor air temperature 35°C; inlet/outlet water temperature 23/18°C.
(3) Heating: outdoor air temperature 7°C d.b. 6°C w.b.; water inlet/outlet temp. 30/35°C.
(4) Heating: outdoor air temperature 7°C d.b. 6°C w.b.; water inlet/outlet temp. 40/45°C.
(5) Cooling: water inlet/outlet temperature 12/7°C
(6) Heating: average climatic conditions; Tbiv = -7°C; water temp. in/out 30/35°C
(7) Indicative data, subject to change. For the correct data, always refer to the technical nameplate on the unit.
(8) The calculated value of minimum system water volume does not take into account the water volume contained in the internal heat exchanger (evaporator). For applications with low outdoor air temperatures or low required average loads, the minimum system water volume is obtained by doubling the indicated value.
(9) Condition (3); value determined on the basis of measurements carried out in accordance with standard UNI EN ISO 9614-2, in compliance with the requirements of Eurovent certification.
(10) Value calculated from the sound power level using ISO 3744:2010, referred to a distance of 10 m from the unit.
N.B. The stated performance data are indicative and may be subject to change. The capacities declared in points (1), (2), (3) and (4) are to be understood as referring to the instantaneous power according to EN 14511. The data declared in points (5) and (6) are determined in accordance with UNI EN 14825.

# Dimensional Drawings

## HWA1-A & HWA1-A/H 0140 / 0147 / 0260 / 0273 / 0285

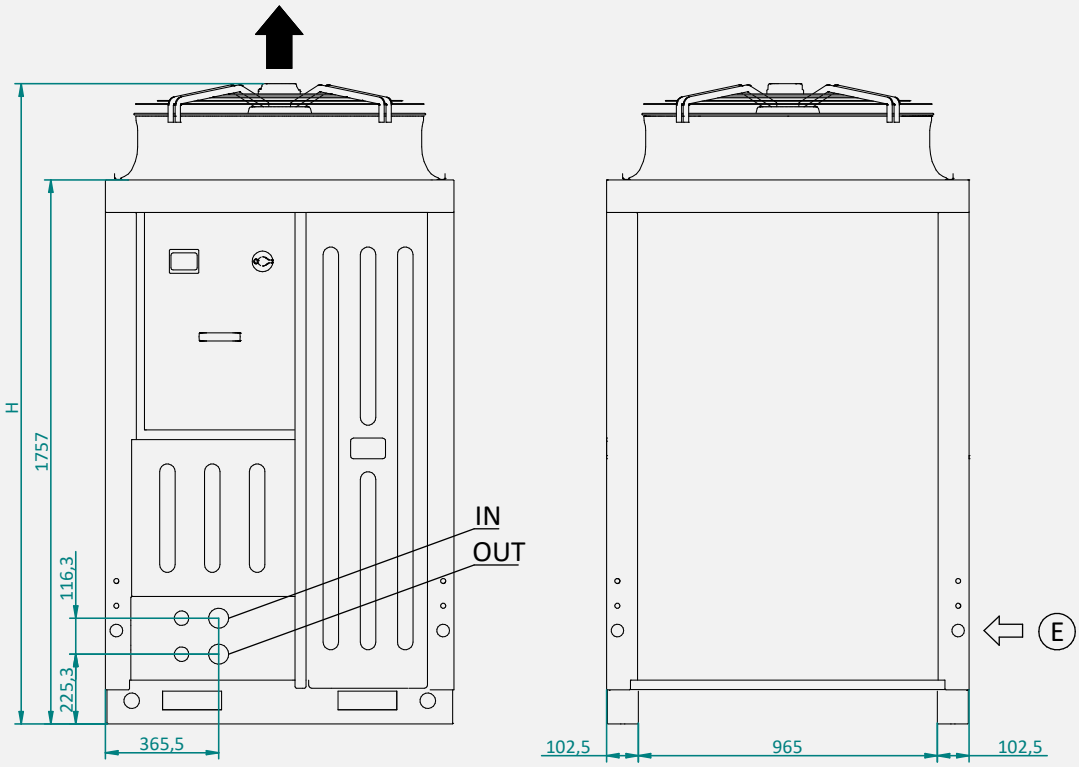


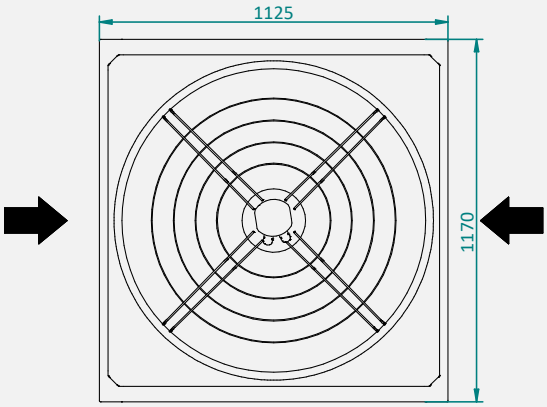


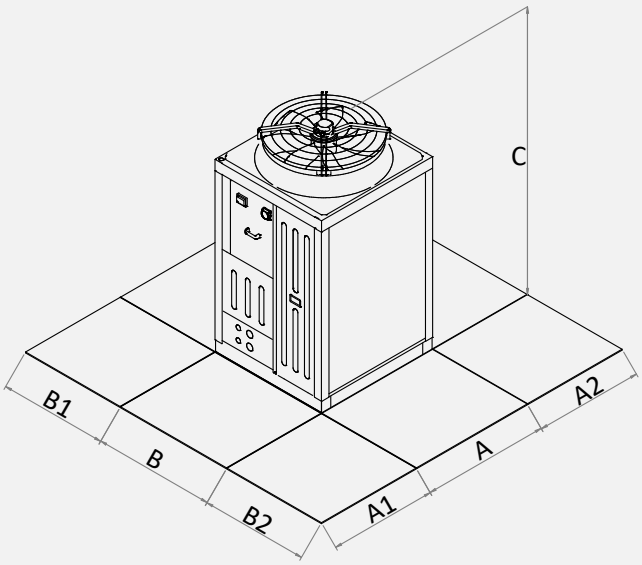


| | | 0140 | 0147 | 0260 | 0273 | 0285 |
|---|---|---|---|---|---|---|
| L | mm | 1125 | 1125 | 1125 | 1125 | 1125 |
| P | mm | 1170 | 1170 | 1170 | 1170 | 1170 |
| H | mm | 2014 | 2014 | 2110 | 2110 | 2110 |
| H (SSL) | mm | 2200 | 2200 | 2220 | 2220 | 2220 |

| Clearances | | A1 | A2 | B1 | B2 |
|---|---|---|---|---|---|
| 0140 | mm | 800 | 800 | 200 | 600 |
| 0147 | mm | 800 | 800 | 200 | 600 |
| 0260 | mm | 800 | 800 | 200 | 600 |
| 0273 | mm | 800 | 800 | 200 | 600 |
| 0285 | mm | 800 | 800 | 200 | 600 |

Dimensions in mm

# Price list

| HWA1-A | | | 0140 | 0147 | 0260 | 0273 | 0285 |
|---|---|---|---|---|---|---|---|
| HWA1-A | Cooling only | € | 16.521 | 19.675 | 23.482 | 25.226 | 28.400 |
| HWA1-A/BT | Cooling only for low-temperature chilled water production (including EC fan) | € | 19.533 | 22.625 | 26.433 | 28.179 | 31.352 |

| FACTORY-MOUNTED ACCESSORY MANDATORY: Standard EC fan for ERP regulation to be added to the unit price | | | | | | | |
|---|---|---|---|---|---|---|---|
| EC | EC fan (included in versions C, C(S), BT, SSL – standard on 0285 CC with modulating control as standard). DC control included | € | 1.825 | 1.825 | 1.825 | 2.142 | Standard |
| FACTORY-MOUNTED ACCESSORIES | | | | | | | |
| C | Ductable version | € | 2.500 | 2.500 | 2.500 | 3.167 | 3.167 |
| C(S) | Ductable version + Soundproofing | € | 3.007 | 3.007 | 3.214 | 3.881 | 3.881 |
| CC | On-off pressure-based condensation control down to -15 °C | € | Available only with EC | | | | Standard |
| CM | Serial communication module for Modbus | € | 858 | 858 | 858 | 858 | 858 |
| CT | On-off pressure-based condensation control down to 0 °C | € | Standard | | | | -- |
| DSF | Phase sequence and failure monitoring device | € | Standard | | | | |
| DSFR | Sequence and phase-failure control device with undervoltage and overvoltage relay | € | 397 | 397 | 397 | 397 | 397 |
| FE | EMC electrical filter for auxiliary devices | € | Standard | | | | |
| FL | Flow switch | € | Standard | | | | |
| GI | System management module | € | 496 | 496 | 496 | 496 | 496 |
| HP LP | High and low pressure transducers with values shown on display | € | Standard | | | | |
| IM | Magnetic circuit breakers on compressors and fans | € | 781 | 781 | 781 | 781 | 781 |
| KA1 | Adhesive resistance exchanger | € | 349 | 349 | 349 | 349 | 349 |
| MPI | Integral protection module for each compressor | € | Standard | | | | |
| PS | Single circulation pump | € | 1.508 | 1.508 | 1.508 | 1.619 | 1.619 |
| SL | Unit silencing | € | 508 | 508 | 714 | 714 | 714 |
| SSL | Super soundproofing with EC fan and DC condensation control down to -15 °C | € | 2.460 | 2.460 | 2.776 | 3.729 | 2.539 |
| TR1 | Microchannel coil with Aero surface treatment | € | 2.063 | 2.063 | 3.253 | 4.125 | 4.125 |
| VEV | Electronic thermostat + bypass solenoid valve for low water and/or air temperatures | € | Standard | | | | |

| HWA1-A/H | | | 0140 | 0147 | 0260 | 0273 | 0285 |
|---|---|---|---|---|---|---|---|
| HWA1-A/H | Chiller and reversible heat pump | € | 19.273 | 22.689 | 27.290 | 29.829 | 33.319 |

| FACTORY-MOUNTED ACCESSORIES | | | | | | | |
|---|---|---|---|---|---|---|---|
| EC | EC fan (included in versions C, BT, SSL – standard on 0285 CC with factory-fitted modulation). Including CC control | € | 1.825 | 1.825 | 1.825 | Standard | |
| C | Ductable version | € | 2.500 | 2.500 | 2.500 | 3.167 | 3.167 |
| C(S) | Ductable version + Soundproofing | € | 3.007 | 3.007 | 3.214 | 3.881 | 3.881 |
| CC | On-off pressure-based condensation control down to -15 °C | € | Available only with EC | | | Standard | |
| CM | Serial communication module for Modbus | € | 877 | 877 | 877 | 877 | 877 |
| CT | On-off pressure-based condensation control down to 0 °C | € | 2.427 | 3.748 | 4.752 | -- | -- |
| DSF | Phase sequence and failure monitoring device | € | Standard | | | | |
| DSFR | Sequence and phase-failure control device with undervoltage and overvoltage relay | € | 397 | 397 | 397 | 397 | 397 |
| FE | EMC electrical filter for auxiliary devices | € | Standard | | | | |
| FL | Flow switch | € | Standard | | | | |
| GI | System management module | € | 496 | 496 | 496 | 496 | 496 |
| HP LP | High and low pressure transducers with values shown on display | € | Standard | | | | |
| IM | Magnetic circuit breakers on compressors and fans | € | 781 | 781 | 781 | 781 | 781 |
| KA | Heat exchanger resistance + base | € | 349 | 349 | 349 | 349 | 349 |
| MPI | Integral protection module for each compressor | € | Standard | | | | |
| PS | Single circulation pump | € | 1.508 | 1.508 | 1.508 | 1.619 | 1.619 |
| SL | Unit silencing | € | 508 | 508 | 714 | 714 | 714 |
| SSL | Super soundproofing with EC fan and DC condensation control down to -15 °C | € | 2.460 | 2.460 | 2.776 | 3.729 | 2.539 |
| TR2 | Cu/Al coil with Silver Line anti-corrosion treatment - Cu | € | 2.063 | 2.063 | 3.253 | 4.125 | 4.125 |
| VEV | Electronic thermostat + bypass solenoid valve for low water and/or air temperatures | € | Standard | | | | |

| ACCESSORIES SUPPLIED SEPARATELY HWA1-A & HWA1-A/H | | Code | € |
|---|---|---|---|
| AG | Anti-vibration mounts | 015908#010050 | 240 |
| Hi-TV415 | Hi-touch control | 0103123#00001 | 659 |
| i-CR2 | Wall-mounted remote control | | 319 |
| SAS | Remote sensor | 0110321000001 | 48 |
| FY | Y-strainer | 015908#010056 | 147 |

For accessories of the DAS monitoring system (ISK, LNC, OVPN), see the chapter "Connection devices for Maxa DAS supervision system."

# HWA1-A 02106÷04349

## Air-cooled water chiller with axial fans

106 kW÷349 kW

The water chillers have been designed for commercial and industrial applications; they are very compact yet equipped with large-surface air-side heat exchangers. They therefore ensure high efficiency, with EER values among the highest in their category.
The use of high-efficiency, particularly robust scroll compressors, together with the patented oil recovery and distribution system used on tandem circuits, guarantees high reliability and consistent performance. Available in 12 sizes.

MADE IN ITALY | R410A REFRIGERANT 2088 GWP | PLATE HEAT EXCHANGER | SCROLL COMPRESSORS

**Casing:** All units in the series feature a structure suitable for outdoor installation, made of hot-dip galvanized steel sheet coated with polyester powder paint in RAL 7035 / RAL 3020 (only for some components) to ensure optimal resistance to atmospheric agents. All screws and inserts are made of galvanized steel.

**Compressors:** of the scroll type, expressly designed to operate with R410A, mounted on rubber anti-vibration supports. The crankcase heater, which is always present, is activated when the compressor is stopped and is disabled when it restarts.

**Air-side heat exchangers**: entirely made of aluminum using microchannel technology, which significantly reduces both air-side pressure drops and refrigerant charge, while at the same time ensuring higher heat transfer capacity for the same frontal surface area compared to traditional heat exchangers.

**User-side heat exchangers:** of the brazed plate type and made of AISI 304 stainless steel for single-circuit units and AISI 316 for dual-circuit units, factory-insulated with closed-cell material, and can be equipped with an electric antifreeze heater (optional accessory KA). A differential pressure switch, installed on the water side, ensures the presence of water flow, preventing ice formation inside.

**Fans:** axial type with airfoil blades. They are statically and dynamically balanced and supplied complete with protective guard and inlet/outlet nozzles with double flared profile, specially shaped to increase efficiency and reduce noise. The motor has an IP54 protection rating according to CEI EN 60529. The electric motor used is modulation-controlled, with a directly coupled EC brushless motor and equipped with integrated thermal protection.

**Refrigeration circuit** : manufactured using components from leading international companies and in accordance with UNI EN 13134. The refrigerant gas is R410A. In its basic version, the refrigeration circuit includes: electronic expansion valve, service valves for maintenance and inspection, safety device compliant with current regulations (high- and low-pressure switch), refrigerant safety valve, pressure transducers for accurate measurement of evaporation and condensation pressures, cartridge-type dehydrator filter, liquid sight glass for checking the refrigerant charge, solenoid valve, and shut-off valves.

**Electrical panel:** fully manufactured and wired in compliance with standard EN 60204, comprising a power section and a control section. The degree of protection of the electrical panel is IP54. The electrical panel is equipped with a terminal block with volt-free contacts for remote ON-OFF.

**Control system** : all units are equipped with a microprocessor-based control board featuring a superheat control logic managed according to the signals sent by the pressure transducers and temperature probes. The CPU also controls the following functions: water temperature regulation, antifreeze protection, compressor start-up and timing, fan and circulation pump management (where present), alarm reset, alarm indication, and operation status LEDs.

**Control and protection devices**: all units are equipped with the following control and protection devices: phase monitor complete with minimum and maximum voltage relay, which stops the unit if the phase sequence is incorrect or the voltage of at least one phase differs by more than 15% from the others; flow water temperature sensor (with antifreeze function); return water temperature sensor (both installed inside the heat exchanger); low-pressure transducer; high-pressure transducer; discharge temperature sensor on the compressors; safety valve on both the low- and high-pressure sides; suction temperature sensor on the compressors; outdoor air temperature sensor; fan thermal protection; thermal protection on each compressor; water-side differential pressure switch protecting the evaporator; manual reset high-pressure switch installed on the compressor discharge line.

**Hydraulic circuit** : the chillers can be supplied with an integrated hydronic module which, in addition to differential pressure switches, includes a single or twin pump (one serving as backup for the other) with AC motor, suitable for chilled water operation and directly managed by the on-board unit control. It is also possible to install an internal buffer tank with external insulation made of closed-cell expanded material, with capacity sized to prevent excessive compressor start-stop cycles.

## Operating Areas

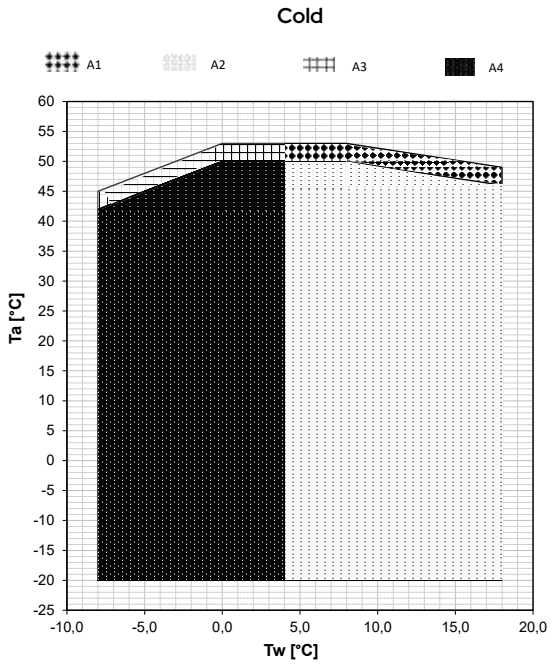


Tw: water temperature - Ta: outdoor air temperature
A1 = HWA1-A partial load
A2 = HWA1-A
A3 = HWA1-A BT partial load
A4 = HWA1-A BT

## Accessories

### Factory-installed

- **KA1 *** – Antifreeze heater for heat exchanger and pump (if present) – electric heating element installed on the front face of the plate heat exchanger, which is activated when the water temperature inside the exchanger falls below +4°C, and electric heating element that protects the pump motor at low temperatures.
- **KA2** * - Antifreeze protection for heat exchanger, pump and tank (if present) – includes KA1 – in addition to accessory KA1, an immersion heater is added in the tank. The kit consists of: an armored electric heater in AISI 321, a programmable digital temperature controller and a contactor.
- **SL **** – Silenced version. The silenced unit (equipped with the SL accessory) features an innovative thermo-acoustic jacket on the compressors. This insulation allows a noise reduction of up to 10% at certain compressor rotational frequencies. The special multilayer structure provides thermal insulation that, at very low temperatures, reduces losses by up to 2% compared to standard insulation.
- **SSL **** – Super-silenced version. The super-silenced unit (equipped with the SSL accessory) includes, in addition to the thermo-acoustic enclosure on the compressors, a special diffuser mounted on the fan. This diffuser increases the fan's efficiency, allowing its speed to be reduced, thereby lowering sound pressure level and energy consumption. In this way, substantial electrical energy savings can be achieved for each fan.
- **C **** – Ductable version. With the ductable version, the diffuser is used to take advantage of the higher available pressure of the fan and, if required, to duct the air discharge.
- **C(S) **** – Ductable version with jackets. In addition to the ductable version, thermo-acoustic jackets are installed on the compressors.
- **PS ***** – Reversible heat pump, heating-only version with standard head.
- **PSAP ***** – Reversible heat pump, high head pump-only version.
- **PD ***** – Reversible heat pump, dual-pump version with standard head.
- **PDAP ***** – Reversible heat pump, dual high-head pump version.
- **PS-SI ***** – Reversible heat pump, standard head pump version + tank
- **PSAP-SI ***** – Reversible heat pump, high-head pump version with storage tank.
- **PD-SI ***** – Reversible heat pump, dual-pump version with standard head + storage tank.
- **PDAP-SI ***** – Reversible heat pump with dual high-head pump configuration and storage tank.
- **TE1** - Special mechanical seal for glycol content above 40% - for water-glycol mixtures with a glycol mass fraction greater than 40% and up to 50%, a different mechanical seal is used to ensure the correct operation of the electric pump.
- **TR1** – Microchannel coil with Aero surface treatment. The treatment consists of spraying a special water-based coating, formulated with new resins offering extremely high chemical resistance. The product is flexible to withstand thermal contractions and expansions, UV-resistant, dirt-repellent, mechanically resistant, with very limited reduction in heat transfer and virtually no impact on air-side pressure drops. The treatment withstands 6,000 h according to ASTM B117.
- **DS** - The desuperheater includes the addition of a brazed plate heat exchanger made of AISI 316 stainless steel, factory-insulated using closed-cell material.
- **BT** - The BT accessory allows the operating range of the water

** Accessories not usable simultaneously
*** Accessories not usable simultaneously
*** Accessories not usable simultaneously

temperature to be extended down to -8°C. In this case, it is necessary to use a water-glycol mixture.

- **EC** - Modulating EC fan. Includes CC function, condensing pressure control down to -20°C. Mandatory accessory for cooling-only versions, comfort applications, EU market.
- **CC** – Condensation control down to -20°C. Includes the EC accessory.
- **CT** - Condensation control down to -10°C.
- **GR1** - Anti-intrusion kit for the refrigerant circuit compartment – fitted on the refrigerant circuit compartment to prevent foreign objects from entering the structure.
- **GR2** - Battery compartment anti-intrusion kit – wire mesh to prevent the entry of foreign objects into the coil and to protect the coil from accidental contact by people or objects.
- **GR3** - Anti-intrusion kit for the refrigeration circuit compartment and anti-intrusion kit for the battery compartment.
- **IM** - Circuit breakers on compressors and fans – overcurrent switches applied to compressors and fans, protecting the components from faults caused by possible current spikes.
- **SS** - Soft starter – electronic static starter for inrush current management, installed inside the electrical panel; it allows a reduction of inrush current and of mechanical wear on the motor windings.
- **LQ** – Internal switchboard lights – light for illuminating the interior of the electrical panel, facilitating maintenance for the operator.
- **SH** - Schuko socket (with MCB) - convenience socket located in the electrical panel (maximum 16 A), protected against overloads and short circuits by a miniature circuit breaker.
- **RFM** - Discharge and suction service valve on compressors – shut-off valve installed on the compressor suction and discharge lines, which simplifies maintenance by preventing the need to recover the refrigerant from the entire unit.
- **2SFV** - Changeover valve with double safety valve – the changeover valve allows alternating use of two safety valves, facilitating periodic inspection or replacement while ensuring system operation and maintaining the safety system.
- **KS** - Lifting bracket kit – facilitates lifting and positioning of the unit.
- **CM** - BMS connectivity setup – ModBus protocol included – accessory that enables the connection of the unit to external controllers via serial cable with RS-485 electrical standard and ModBus RTU protocol.

## Provided separately

- **AG** - Rubber anti-vibration kit – designed to prevent vibration transmission to the structure; they are to be installed beneath the unit, in the designated mounting holes.
- **AM -** Spring anti-vibration kit – designed to prevent transmission of vibrations to the structure; they must be installed underneath the unit, in the designated holes.
- **FY** - Y-strainer – contains a stainless steel mesh screen (500 µm filtration) that collects solid materials present in the water. Filtration prevents blockage and/or damage to the devices installed downstream of the strainer. Alternatively, it is possible to install a dirt separator that ensures a filtration level not greater than 1 mm (in this case, it is no longer necessary to install the Y-strainer).
- **SAS** - Remote system probe.
- **RV** – Grooved connection joint. To facilitate installation, a carbon steel pipe nipple can be supplied, featuring on one end a grooved connection compatible with the one on the unit and complete with the appropriate coupling for the connection, and on the other end a G 1" 1/2 M threaded connection. The kit consists of 2 nipples and 2 grooved connections to connect the nipples to the unit.
- **ISK**** - USB/RS485 serial converter – interface device capable of reading and writing control registers via the RS485 standard and converting them to a USB port that can be connected to any supervision system.
- **LNC**** - LAN-Wi-Fi router – device that allows the unit to be connected to a local network via Ethernet cable or Wi-Fi coverage for remote monitoring.
- **OVPN**** - 4G LAN-Wi-Fi router with VPN tunnelling – a device that allows you to connect the unit remotely to an industrial router using the secure OPENVPN service.
- **i-CR2**** - Wall-mounted remote control – Modbus remote controller with negative LCD and capacitive keys. The device is intended to be used as a remote unit keypad with local temperature sensing and replicates the functions of the on-board unit controller.
- **Hi-TV415**** - Color touch screen wired remote controller for the centralized management of a cascade of chillers/heat pumps, for up to 7 units.

**i-CR2**
Wall-mounted remote control
ACCESSORY

**Hi-TV415**
Touch screen remote controller for cascade management (max 7 units)
ACCESSORY

# Dimensional Drawings

## HWA1-A 02106÷04349

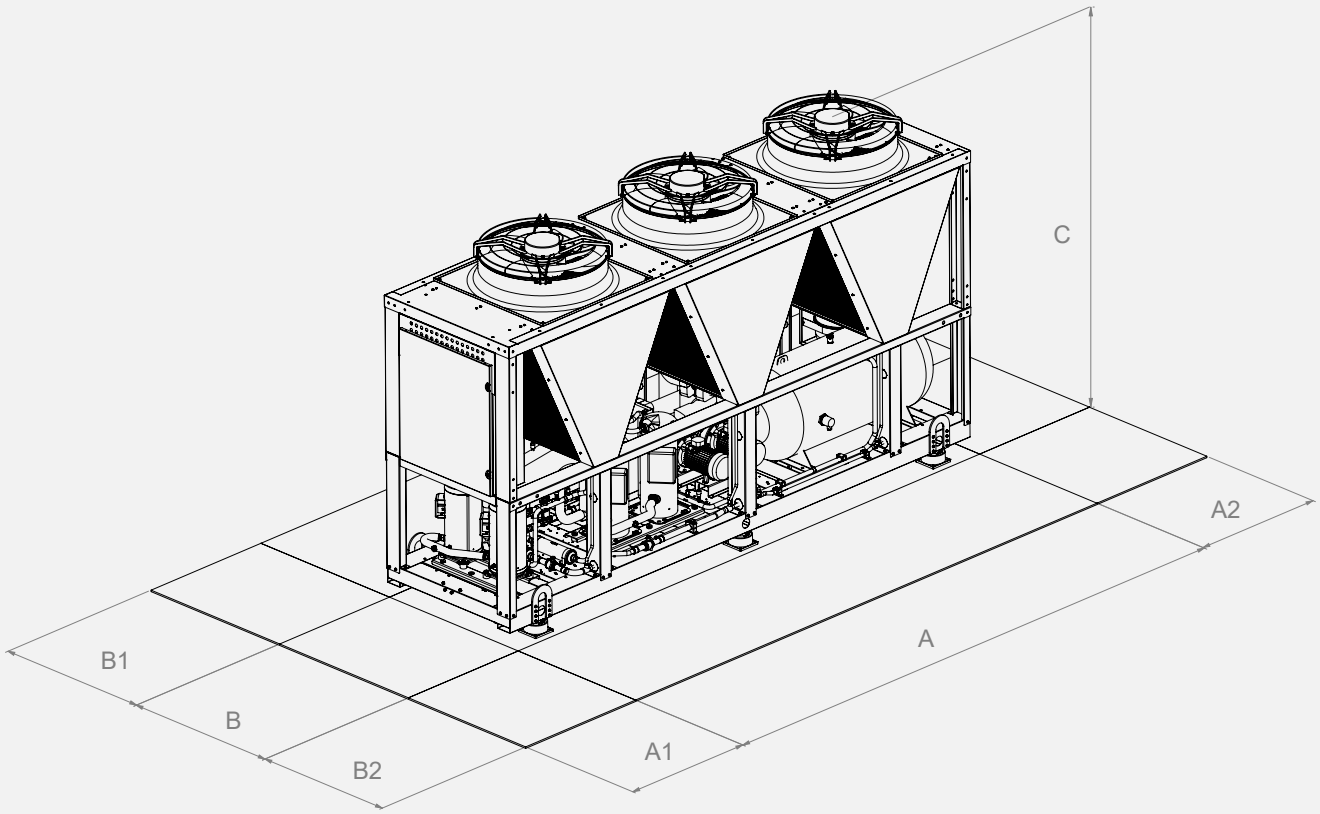


| Model | Dimensions | | | Clearances | | | | User heat exchanger | |
|---|---|---|---|---|---|---|---|---|---|
| | A [mm] | B [mm] | C [mm] | A1[mm] | A2 [mm] | B1 [mm] | B2 [mm] | Type | Ø * |
| 02106 | 2860 | 1100 | 2350 | 1000 | 800 | 1000 | 1000 | Victaulic | DN65 (2” 1/2) |
| 02120 | 2860 | 1100 | 2350 | 1000 | 800 | 1000 | 1000 | Victaulic | DN65 (2” 1/2) |
| 02128 | 2860 | 1100 | 2350 | 1000 | 800 | 1000 | 1000 | Victaulic | DN65 (2” 1/2) |
| 02140 | 4060 | 1100 | 2350 | 1000 | 800 | 1000 | 1000 | Victaulic | DN65 (2” 1/2) |
| 04155 | 4060 | 1100 | 2350 | 1000 | 800 | 1000 | 1000 | Victaulic | DN80 (3”) |
| 04177 | 4060 | 1100 | 2350 | 1000 | 800 | 1000 | 1000 | Victaulic | DN80 (3”) |
| 04184 | 4060 | 1100 | 2350 | 1000 | 800 | 1000 | 1000 | Victaulic | DN80 (3”) |
| 04209 | 2860 | 2200 | 2350 | 1000 | 800 | 1000 | 1000 | Victaulic | DN80 (3”) |
| 04239 | 2860 | 2200 | 2350 | 1000 | 800 | 1000 | 1000 | Victaulic | DN80 (3”) |
| 04258 | 2860 | 2200 | 2350 | 1000 | 800 | 1000 | 1000 | Victaulic | DN80 (3”) |
| 04305 | 4060 | 2200 | 2350 | 1000 | 800 | 1000 | 1000 | Victaulic | DN80 (3”) |
| 04349 | 4060 | 2200 | 2350 | 1000 | 800 | 1000 | 1000 | Victaulic | DN80 (3”) |

* It depends on the hydronic version – refer to the technical bulletin

| | | | 02106 | 02120 | 02128 | 02140 | 04155 | 04177 |
|---|---|---|---|---|---|---|---|---|
| **Cooling** | Cooling capacity (1) | kW | 105 | 119 | 130 | 139 | 155 | 176 |
| | Total absorbed power (1) | kW | 33,5 | 38,3 | 44,2 | 44,3 | 49,9 | 56,7 |
| | EER (1) | W/W | 3,13 | 3,10 | 2,93 | 3,15 | 3,11 | 3,10 |
| | Cooling capacity (2) | kW | 139 | 155 | 164 | 185 | 204 | 230 |
| | Total absorbed power (2) | kW | 35,7 | 40,8 | 46,8 | 47,5 | 52,9 | 60,9 |
| | EER (2) | W/W | 3,88 | 3,79 | 3,50 | 3,89 | 3,87 | 3,77 |
| | SEER (3) | W/W | 4,13 | 4,12 | 4,11 | 4,27 | 4,11 | 4,11 |
| | IPLV (9) | | 4,99 | 5,09 | 4,71 | 5,02 | 5,13 | 5,13 |
| | Cooling capacity (8) | kW | 61,9 | 70,6 | 77,8 | 82,0 | 91,5 | 103 |
| | Total absorbed power (8) | kW | 29,9 | 34,1 | 39,3 | 39,5 | 45,4 | 50,8 |
| | EER (8) | W/W | 2,07 | 2,07 | 1,98 | 2,08 | 2,02 | 2,04 |
| | Water flow rate (1) | l/s | 5,0 | 5,7 | 6,2 | 6,7 | 7,4 | 8,4 |
| | Pressure drops in the heat exchanger, user side (1) | kPa | 31,68 | 39,65 | 24,67 | 41,78 | 45,07 | 40,44 |
| **Compressor** | Compressor type | | SCROLL | | | | | |
| | Refrigerant oil (type) | | Emkarate RL 32 3MAF | | | | | |
| | No. of compressors | No. | 2 | 2 | 2 | 2 | 4 | 4 |
| | Standard capacity steps | No. | 2 | 3 | 2 | 3 | 4 | 4 |
| | Oil charge (Circuit 1) | l | 4,44 + 4,44 | 4,44 + 4,44 | 4,44 + 4,44 | 6,3 + 4,44 | 3,25 + 3,25 | 4,44 + 4,44 |
| | Oil load (Circuit 2) | l | - | - | - | - | 3,25 + 3,25 | 3,25 + 3,25 |
| | Refrigerant circuits | No. | 1 | 1 | 1 | 1 | 2 | 2 |
| **Refrigerant** | Type | | R410A | | | | | |
| | Refrigerant charge (Circuit 1) (4) | kg | 10,5 | 10,5 | 10,5 | 15 | 13,0 | 13,0 |
| | Refrigerant charge (Circuit 2) (4) | kg | - | - | - | - | 10,5 | 10,5 |
| | Tons of $CO_2$ equivalent (4) | Ton | 21,9 | 21,9 | 21,9 | 31,3 | 49,1 | 49,1 |
| | Design pressure (high/low) | bar | 40,5/4 | 40,5/4 | 40,5/4 | 40,5/4 | 40,5/4 | 40,5/4 |
| **Outdoor zone fans** | Fan types | | AXIAL | | | | | |
| | No. of fans | No. | 2 | 2 | 2 | 3 | 3 | 3 |
| | Rated power (1) | kW | 1,5 | 1,5 | 1,5 | 1,4 | 1,4 | 1,4 |
| | Maximum power | kW | 3,8 | 3,8 | 3,8 | 5,7 | 5,7 | 5,7 |
| | Maximum absorbed current | A | 3,9 | 3,9 | 3,9 | 3,9 | 3,9 | 3,9 |
| | Standard air flow rate | l/s | 10614 | 10714 | 11143 | 14649 | 14467 | 15868 |
| **Internal heat exchanger** | Internal heat exchanger type | | PHE – PLATE TYPE | | | | | |
| | No. of indoor heat exchangers | No. | 1 | 1 | 1 | 1 | 1 | 1 |
| | Water content | l | 6,87 | 6,87 | 9,90 | 7,88 | 9,30 | 11,40 |
| **Hydraulic circuit** | Max water-side pressure | bar | 12 | 12 | 12 | 12 | 12 | 12 |
| | Max pressure of hydronic kit (safety valve setting) | bar | 6 | 6 | 6 | 6 | 6 | 6 |
| | Water connections | | 2" 1/2 | 2" 1/2 | 2" 1/2 | 2" 1/2 | 3" | 3" |
| | Minimum system water content (5) | l | 427 | 535 | 535 | 699 | 409 | 533 |
| **Sound data** | Sound power (6) | dB (A) | 86 std<br>85 SL<br>83 SSL | 86 std<br>85 SL<br>83 SSL | 87 std<br>86 SL<br>84 SSL | 87 std<br>86 SL<br>84 SSL | 87 std<br>86 SL<br>84 SSL | 88 std<br>87 SL<br>85 SSL |
| | Sound pressure (7) | dB (A) | 54 std<br>53 SL<br>51 SSL | 54 std<br>53 SL<br>51 SSL | 55 std<br>54 SL<br>52 SSL | 54,9 std<br>53,9 SL<br>51,9 SSL | 54,9 std<br>53,9 SL<br>51,9 SSL | 55,9 std<br>54,9 SL<br>52,9 SSL |
| **Electrical data** | Power supply | | 400V/3P/50Hz | | | | | |
| | Maximum power input version without accessories | kW | 48,9 | 55,0 | 61,1 | 66,9 | 82,4 | 87,4 |
| | Maximum absorbed current version without accessories | A | 83,0 | 93,4 | 103,8 | 113,5 | 139,9 | 148,3 |
| | Maximum inrush current version without accessories | A | 285,6 | 332,3 | 342,7 | 358,1 | 279,9 | 350,9 |
| **Dimensions and weights** | A - Length | mm | 2860 | 2860 | 2860 | 4060 | 4060 | 4060 |
| | B - Depth | mm | 1100 | 1100 | 1100 | 1100 | 1100 | 1100 |
| | C - Height | mm | 2350 | 2350 | 2350 | 2350 | 2350 | 2350 |
| | Net shipping weight | kg | 1080 | 1080 | 1090 | 1510 | 1620 | 1620 |
| | Operating weight | kg | 1090 | 1090 | 1100 | 1520 | 1630 | 1630 |

(1) Cooling: outdoor air temperature 35°C; inlet/outlet water temperature 12/7°C.
(2) Cooling: outdoor air temperature 35°C; inlet/outlet water temperature 23/18°C.
(3) Cooling: inlet/outlet water temperature 7/12°C.
(4) Data is indicative and subject to change. For the correct value, always refer to the technical label on the unit.
(5) The indicated volume refers to the total required amount; the designer must meet this requirement by taking into account the quantity already contained within the unit, depending on the selected hydronic kit (please refer to the technical data sheet to check this value).
(6) Condition (1); value determined on the basis of measurements carried out in accordance with UNI EN ISO 9614-1.
(7) Value calculated from the sound power level using ISO 3744:2010, referenced to a distance of 10 m from the unit.
(8) Cooling BT version: outdoor air temperature 35°C, internal heat exchanger water temperature = -3/-8°C. Fluid treated with 35% ethylene glycol.
(9) Calculated according to AHRI 551/591 (SI) standard.
The stated performance data are indicative and may be subject to change. Furthermore, the capacities declared at points (1), (2), (8) refer to the instantaneous power in accordance with UNI EN 14511. The value declared at point (3) is determined in accordance with UNI EN 14825.

| | | | 04184 | 04209 | 04239 | 04258 | 04305 | 04349 |
|---|---|---|---|---|---|---|---|---|
| **Cooling** | Cooling capacity (1) | kW | 182 | 208 | 238 | 257 | 305 | 348 |
| | Total absorbed power (1) | kW | 62,9 | 67,1 | 76,8 | 88,5 | 98,3 | 112 |
| | EER (1) | W/W | 2,90 | 3,10 | 3,10 | 2,90 | 3,10 | 3,10 |
| | Cooling capacity (2) | kW | 239 | 277 | 314 | 333 | 405 | 458 |
| | Total absorbed power (2) | kW | 67,8 | 71,6 | 81,9 | 94,6 | 105 | 121 |
| | EER (2) | W/W | 3,52 | 3,87 | 3,84 | 3,52 | 3,85 | 3,78 |
| | SEER (3) | W/W | 4,10 | 4,14 | 4,24 | 4,10 | 4,16 | 4,12 |
| | IPLV (9) | | 4,95 | 4,99 | 4,94 | 4,37 | 4,92 | 5,05 |
| | Cooling capacity (8) | kW | 109 | 123 | 144 | 158 | 184 | 211 |
| | Total absorbed power (8) | kW | 55,8 | 59,7 | 68,8 | 79,4 | 88,5 | 101 |
| | EER (8) | W/W | 1,95 | 2,06 | 2,09 | 1,99 | 2,08 | 2,10 |
| | Water flow rate (1) | l/s | 8,7 | 9,9 | 11,4 | 12,3 | 14,6 | 16,6 |
| | Pressure drops in the heat exchanger, user side (1) | kPa | 43,31 | 55,47 | 42,98 | 49,56 | 40,76 | 52,52 |
| **Compressor** | Compressor type | | SCROLL | | | | | |
| | Refrigerant oil (type) | | Emkarate RL 32 3MAF | | | | | |
| | No. of compressors | No. | 4 | 4 | 4 | 4 | 4 | 4 |
| | Standard capacity steps | No. | 4 | 4 | 6 | 4 | 6 | 4 |
| | Oil charge (Circuit 1) | l | 4,44 + 4,44 | 4,44 + 4,44 | 4,44 + 4,44 | 4,44 + 4,44 | 4,44 + 6,3 | 6,3 + 6,3 |
| | Oil load (Circuit 2) | l | 4,44 + 4,44 | 4,44 + 4,44 | 4,44 + 4,44 | 4,44 + 4,44 | 4,44 + 6,3 | 6,3 + 6,3 |
| | Refrigerant circuits | No. | 2 | 2 | 2 | 2 | 2 | 2 |
| **Refrigerant** | Type | | R410A | | | | | |
| | Refrigerant charge (Circuit 1) (4) | kg | 13,0 | 13,0 | 13,5 | 13,5 | 19,5 | 20,0 |
| | Refrigerant charge (Circuit 2) (4) | kg | 10,5 | 13,0 | 13,5 | 13,5 | 19,5 | 20,5 |
| | Tons of $CO_2$ equivalent (4) | Ton | 49,1 | 54,3 | 56,4 | 56,4 | 81,4 | 84,6 |
| | Design pressure (high/low) | bar | 40,5/4 | 40,5/4 | 40,5/4 | 40,5/4 | 40,5/4 | 40,5/4 |
| **Outdoor zone fans** | Fan types | | AXIAL | | | | | |
| | No. of fans | No. | 3 | 4 | 4 | 4 | 6 | 6 |
| | Rated power (1) | kW | 1,5 | 1,4 | 1,5 | 1,5 | 1,4 | 1,5 |
| | Maximum power | kW | 5,7 | 7,6 | 7,6 | 7,6 | 11,4 | 11,4 |
| | Maximum absorbed current | A | 3,9 | 3,9 | 3,9 | 3,9 | 3,9 | 3,9 |
| | Standard air flow rate | l/s | 15892 | 20647 | 20471 | 22231 | 29279 | 33255 |
| **Internal heat exchanger** | Internal heat exchanger type | | PHE – PLATE TYPE | | | | | |
| | No. of indoor heat exchangers | No. | 1 | 1 | 1 | 1 | 1 | 1 |
| | Water content | l | 11,40 | 11,40 | 15,50 | 22,10 | 22,10 | 22,10 |
| **Hydraulic circuit** | Max water-side pressure | bar | 12 | 12 | 12 | 12 | 12 | 12 |
| | Max pressure of hydronic kit (safety valve setting) | bar | 6 | 6 | 6 | 6 | 6 | 6 |
| | Water connections | | 3" | 3" | 3" | 3" | 3" | 3" |
| | Minimum system water content (5) | l | 533 | 533 | 669 | 669 | 874 | 874 |
| **Sound data** | Sound power (6) | dB (A) | 88 std<br>87 SL<br>85 SSL | 88 std<br>87 SL<br>85 SSL | 88 std<br>87 SL<br>85 SSL | 88 std<br>87 SL<br>85 SSL | 88 std<br>87 SL<br>85 SSL | 90 std<br>89 SL<br>87 SSL |
| | Sound pressure (7) | dB (A) | 55,9 std<br>54,9 SL<br>52,9 SSL | 55,9 std<br>54,9 SL<br>52,9 SSL | 55,9 std<br>54,9 SL<br>52,9 SSL | 55,9 std<br>54,9 SL<br>52,9 SSL | 55,8 std<br>54,8 SL<br>52,8 SSL | 57,8 std<br>56,8 SL<br>54,8 SSL |
| **Electrical data** | Power supply | | 400V/3P/50Hz | | | | | |
| | Maximum power input version without accessories | kW | 90,9 | 97,8 | 110,0 | 122,3 | 146,0 | 165,8 |
| | Maximum absorbed current version without accessories | A | 154,3 | 166,0 | 186,8 | 207,6 | 247,8 | 281,4 |
| | Maximum inrush current version without accessories | A | 356,9 | 368,6 | 425,7 | 446,5 | 492,4 | 526,0 |
| **Dimensions and weights** | A - Length | mm | 4060 | 2860 | 2860 | 2860 | 4060 | 4060 |
| | B - Depth | mm | 1100 | 2200 | 2200 | 2200 | 2200 | 2200 |
| | C - Height | mm | 2350 | 2350 | 2350 | 2350 | 2350 | 2350 |
| | Net shipping weight | kg | 1620 | 1950 | 1960 | 1960 | 2670 | 2850 |
| | Operating weight | kg | 1630 | 1960 | 1970 | 1980 | 2690 | 2870 |

(1) Cooling: outdoor air temperature 35°C; inlet/outlet water temperature 12/7°C.
(2) Cooling: outdoor air temperature 35°C; inlet/outlet water temperature 23/18°C.
(3) Cooling: inlet/outlet water temperature 7/12°C.
(4) Data is indicative and subject to change. For the correct value, always refer to the technical label on the unit.
(5) The indicated volume refers to the total required amount; the designer must meet this requirement by taking into account the quantity already contained within the unit, depending on the selected hydronic kit (please refer to the technical data sheet to check this value).
(6) Condition (1); value determined on the basis of measurements carried out in accordance with UNI EN ISO 9614-1.
(7) Value calculated from the sound power level using ISO 3744:2010, referenced to a distance of 10 m from the unit.
(8) Cooling BT version: outdoor air temperature 35°C, internal heat exchanger water temperature = -3/-8°C. Fluid treated with 35% ethylene glycol.
(9) Calculated according to AHRI 551/591 (SI) standard.
The stated performance data are indicative and may be subject to change. Furthermore, the capacities declared at points (1), (2), (8) refer to the instantaneous power in accordance with UNI EN 14511. The value declared at point (3) is determined in accordance with UNI EN 14825.

# Price list

| HWA1-A | | | 02106 | 02120 | 02128 | 02140 | 04155 | 04177 |
|---|---|---|---|---|---|---|---|---|
| HWA1-A | Cooling only | € | 38.855 | 41.245 | 42.895 | 48.626 | 51.060 | 54.312 |

| | | | | | | | | |
|---|---|---|---|---|---|---|---|---|
| **FACTORY-MOUNTED ACCESSORY MANDATORY: Standard EC fan for ERP regulation to be added to the unit price** | | | | | | | | |
| EC | EC fan (included in C, BT, SSL versions). DC control included | € | 2.138 | 2.138 | 2.138 | 2.941 | 2.406 | 2.138 |
| **FACTORY-MOUNTED ACCESSORIES** | | | | | | | | |
| 2SFV | Double safety valve | € | 427 | 427 | 427 | 427 | 856 | 856 |
| BT | Cooling only BT version (EC accessory already included) | € | 5.274 | 5.323 | 5.536 | 6.655 | 6.432 | 7.966 |
| C | Ductable version (EC accessory is already included for these versions) | € | 3.475 | 3.475 | 3.475 | 5.614 | 5.614 | 5.614 |
| C(S) | Ductable version with compressor soundproofing | € | 4.492 | 4.600 | 4.600 | 6.812 | 7.174 | 7.174 |
| CC | Condensation control down to -20°C (Only with EC fans) | € | 2.138 | 2.138 | 2.138 | 2.941 | 2.406 | 2.138 |
| CM | Serial communication module for Modbus | € | 850 | 850 | 850 | 850 | 850 | 850 |
| CT | Condensation control down to -10°C | € | 390 | 390 | 390 | 390 | 390 | 578 |
| DS | Cooling only with partial heat recovery (desuperheater circuit) | € | 4.093 | 4.486 | 4.665 | 7.242 | 7.601 | 6.537 |
| GR1 | Anti-intrusion kit for refrigeration circuit compartment | € | 2.230 | 2.230 | 2.230 | 2.723 | 2.723 | 2.723 |
| GR2 | Anti-intrusion battery compartment kit | € | 776 | 776 | 776 | 776 | 776 | 776 |
| GR3 | Anti-intrusion kit for battery compartment and circuit | € | 3.006 | 3.006 | 3.006 | 3.498 | 3.498 | 3.498 |
| IM | Magnetic circuit breakers on compressors and fans | € | 869 | 869 | 869 | 1.523 | 1.764 | 1.764 |
| KA1 | Adhesive heater for heat exchanger + pump heater (if present). Not available for units with tank | € | 253 | 253 | 253 | 253 | 253 | 253 |
| KA2 | Adhesive heater exchanger + pump heater (if present) + heater | € | 936 | 936 | 936 | 936 | 936 | 936 |
| KS | Lifting bracket kit | € | 294 | 294 | 294 | 294 | 294 | 294 |
| LQ | Internal electrical panel lights | € | 468 | 468 | 468 | 468 | 468 | 468 |
| PD | Twin pump, standard head | € | 7.217 | 7.217 | 7.217 | 8.101 | 8.101 | 8.634 |
| PD-SI | Dual standard-head pump + tank | € | 10.552 | 11.962 | 10.552 | 12.163 | 12.029 | 12.029 |
| PDAP | Dual high-head pump | € | 8.287 | 8.287 | 8.287 | 9.623 | 9.891 | 9.891 |
| PDAP-SI | Double high-head pump + tank | € | 11.889 | 13.299 | 11.889 | 14.035 | 13.901 | 13.901 |
| PS | Standard head pump | € | 3.876 | 3.876 | 3.876 | 5.413 | 5.413 | 5.413 |
| PS-SI | Standard head pump + tank | € | 7.552 | 7.552 | 7.552 | 8.755 | 8.020 | 8.020 |
| PSAP | High-head pump | € | 4.946 | 4.946 | 4.946 | 6.215 | 6.215 | 6.215 |
| PSAP-SI | High head pump + tank | € | 8.622 | 8.622 | 8.622 | 9.824 | 9.089 | 9.089 |
| RFM | Delivery and suction valves for compressors | € | 422 | 422 | 422 | 843 | 843 | 843 |
| SH | Schuko socket (with miniature circuit breaker) | € | 280 | 280 | 280 | 280 | 280 | 280 |
| SL | Silenced version | € | 1017 | 1.125 | 1.125 | 1.198 | 1.558 | 1.558 |
| SS | Soft starter | € | 3.826 | 4.135 | 4.135 | 5.104 | 6.048 | 6.048 |
| SSL | Super-silent version (EC accessory is already included for these versions). | € | 3.604 | 3.604 | 3.604 | 4.993 | 5.480 | 5.881 |
| TE1 | Special mechanical seal for glycol >40% | € | 375 | 375 | 375 | 576 | 576 | 576 |
| TR1 | Microchannel coil with Aero surface treatment | € | 3.943 | 3.943 | 3.943 | 5.614 | 8.287 | 8.287 |
| **ACCESSORIES SUPPLIED SEPARATELY** | | | | | | | | |
| AG | Rubber anti-vibration mounts | € | 749 | 749 | 749 | 1.110 | 1.110 | 1.110 |
| AM | Spring anti-vibration mounts | € | 1.929 | 2.560 | 2.560 | 2.560 | 2.560 | 2.560 |
| FY | Y-strainer | € | 180 | 180 | 180 | 259 | 259 | 259 |
| Hi-TV415 | Touchscreen remote control | € | 659 | 659 | 659 | 659 | 659 | 659 |
| i-CR2 | Wall-mounted remote control | € | 319 | 319 | 319 | 319 | 319 | 319 |
| RV | Starter kit consisting of 2 jaws and 2 plain stubs | € | 129 | 129 | 129 | 129 | 129 | 129 |
| SAS | Remote sensor | € | 48 | 48 | 48 | 48 | 48 | 48 |

# Price list

| HWA1-A | | | 04184 | 04209 | 04239 | 04258 | 04305 | 04349 |
|---|---|---|---|---|---|---|---|---|
| HWA1-A | Cooling only | € | 69.432 | 70.806 | 72.578 | 83.259 | 90.843 | 103.270 |

| | | | | | | | | |
|---|---|---|---|---|---|---|---|---|
| **FACTORY-MOUNTED ACCESSORY MANDATORY: Standard EC fan for ERP regulation to be added to the unit price** | | | | | | | | |
| EC | EC fan (included in C, BT, SSL versions). DC control included | € | 2.138 | 2.941 | 2.941 | 2.941 | 5.347 | 5.347 |
| **FACTORY-MOUNTED ACCESSORIES** | | | | | | | | |
| 2SFV | Double safety valve | € | 856 | 856 | 856 | 856 | 856 | 856 |
| BT | Cooling only BT version (EC accessory already included) | € | 6.860 | 6.765 | 6.923 | 7.137 | 7.629 | 5.698 |
| C | Ductable version (EC accessory is already included for these versions) | € | 5.614 | 6.763 | 6.763 | 6.763 | 10.961 | 12.297 |
| C(S) | Ductable version with compressor soundproofing | € | 7.299 | 8.528 | 8.668 | 8.668 | 12.979 | 14.315 |
| CC | Condensation control down to -20°C (Only with EC fans) | € | 2.138 | 2.941 | 2.941 | 2.941 | 5.347 | 5.347 |
| CM | Serial communication module for Modbus | € | 850 | 850 | 850 | 850 | 850 | 850 |
| CT | Condensation control down to -10°C | € | 578 | 578 | 578 | 578 | 578 | 578 |
| DS | Cooling only Partial Heat Recovery (Desuperheater Circuit) | € | 5.824 | 7.353 | 5.884 | 8.107 | 8.260 | 7.064 |
| GR1 | Anti-intrusion kit for refrigeration circuit compartment | € | 2.723 | 2.852 | 2.852 | 2.852 | 3.344 | 3.344 |
| GR2 | Anti-intrusion battery compartment kit | € | 1.102 | 1.102 | 1.403 | 1.403 | 1.671 | 1.671 |
| GR3 | Anti-intrusion kit for battery compartment and circuit | € | 3.825 | 3.954 | 4.256 | 4.256 | 5.016 | 5.016 |
| IM | Magnetic circuit breakers on compressors and fans | € | 1.764 | 1.764 | 1.764 | 1.764 | 2.607 | 3.074 |
| KA1 | Adhesive heater for heat exchanger + pump heater (if present).<br>Not available for units with tank | € | 253 | 253 | 253 | 253 | 253 | 253 |
| KA2 | Adhesive heater exchanger + pump heater (if present) + heater | € | 936 | 936 | 936 | 936 | 936 | 936 |
| KS | Lifting bracket kit | € | 294 | 294 | 294 | 294 | 294 | 294 |
| LQ | Internal electrical panel lights | € | 468 | 468 | 468 | 468 | 468 | 468 |
| PD | Twin pump, standard head | € | 8.876 | 9.303 | 9.303 | 10.105 | 10.693 | 12.565 |
| PD-SI | Dual standard-head pump + tank | € | 15.371 | 16.307 | 16.843 | 16.843 | 17.911 | 19.247 |
| PDAP | Dual high-head pump | € | 9.891 | 10.159 | 10.159 | 10.827 | 12.297 | 13.366 |
| PDAP-SI | Double high-head pump + tank | € | 16.709 | 17.643 | 18.178 | 19.782 | 19.782 | 21.118 |
| PS | Standard head pump | € | 5.413 | 5.413 | 5.413 | 6.629 | 6.629 | 6.629 |
| PS-SI | Standard head pump + tank | € | 10.426 | 10.693 | 11.227 | 12.297 | 12.699 | 12.699 |
| PSAP | High-head pump | € | 6.215 | 6.483 | 6.483 | 7.485 | 7.753 | 8.020 |
| PSAP-SI | High head pump + tank | € | 11.495 | 11.763 | 12.297 | 13.366 | 13.767 | 13.767 |
| RFM | Delivery and suction valves for compressors | € | 843 | 843 | 843 | 843 | 1.186 | 1.186 |
| SH | Schuko socket (with miniature circuit breaker) | € | 280 | 280 | 280 | 280 | 280 | 280 |
| SL | Silenced version | € | 1.684 | 1.764 | 1.904 | 1.904 | 2.019 | 2.019 |
| SS | Soft starter | € | 7.648 | 7.648 | 7.859 | 8.267 | 10.197 | 11.561 |
| SSL | Super-silent version (EC accessory is already included for these versions). | € | 8.555 | 9.223 | 9.357 | 9.357 | 13.633 | 14.169 |
| TE1 | Special mechanical seal for glycol >40% | € | 576 | 576 | 576 | 576 | 576 | 576 |
| TR1 | Microchannel coil with Aero surface treatment | € | 8.287 | 7.886 | 7.886 | 7.886 | 11.093 | 11.093 |
| **ACCESSORIES SUPPLIED SEPARATELY** | | | | | | | | |
| AG | Rubber anti-vibration mounts | € | 1.354 | 1.354 | 1.354 | 1.354 | 2.325 | 2.531 |
| AM | Spring anti-vibration mounts | € | 2.517 | 2.517 | 23.517 | 2.517 | 3.264 | 3.264 |
| FY | Y-strainer | € | 259 | 387 | 387 | 387 | 439 | 439 |
| Hi-TV415 | Touchscreen remote control | € | 659 | 659 | 659 | 659 | 659 | 659 |
| i-CR2 | Wall-mounted remote control | € | 319 | 319 | 319 | 319 | 319 | 319 |
| RV | Starter kit consisting of 2 jaws and 2 plain stubs | € | 129 | 129 | 129 | 180 | 180 | 180 |
| SAS | Remote sensor | € | 48 | 48 | 48 | 48 | 48 | 48 |
| **STANDARD** | | | | | | | | |
| | Remote probe enablement | € | standard | | | | | |
| | Second setpoint enable | € | standard | | | | | |

For accessories of the DAS monitoring system (ISK, LNC, OVPN), see the chapter "Connection devices for Maxa DAS supervision system."

# HWA1-A/H 02109÷04345

## Air/water heat pumps with axial fans

109 kW÷345 kW

The air-to-water heat pumps have been designed for commercial and industrial applications; they are very compact yet equipped with large-surface air-side heat exchangers. As a result, they ensure high efficiency, with COP values among the highest in their category. The use of high-efficiency, particularly robust scroll compressors, together with the patented oil recovery and distribution system used on tandem circuits, guarantees high reliability and consistent performance. Available in 12 sizes.

MADE IN ITALY

R410A
REFRIGERANT 2088 GWP

PLATE HEAT EXCHANGER

SCROLL COMPRESSORS

**Casing:** All units in the series feature a structure suitable for outdoor installation, made of hot-dip galvanized steel sheet coated with polyester powder paint in RAL 7035 / RAL 3020 (only for some components) to ensure optimal resistance to atmospheric agents. All screws and inserts are made of galvanized steel.

**Compressors**: scroll type, specifically designed to operate with R410A, mounted on rubber anti-vibration supports. The crankcase heater, which is always present, is activated when the compressor is stopped and is disabled when it restarts.

**Air-side heat exchangers:** finned-coil type, made with copper tubes and aluminum fins with corrugated surface, suitably spaced to ensure maximum heat exchange efficiency.

**User-side heat exchangers:** of the brazed plate type and made of AISI 304 stainless steel for single-circuit units and AISI 316 for dual-circuit units, factory-insulated with closed-cell material, and can be equipped with an electric antifreeze heater (optional accessory KA). A differential pressure switch, installed on the water side, ensures the presence of water flow, preventing ice formation inside.

**Fans**: axial type with airfoil profile blades. They are statically and dynamically balanced and supplied complete with protective grille and inlet and outlet nozzles with double flared profile, specially shaped to increase efficiency and reduce noise. The motor has an IP54 protection rating in accordance with CEI EN 60529. Regulation is performed by means of voltage variators, directly controlled by the onboard unit control; this solution is particularly suitable when operation with outdoor air temperatures below –10 °C is required and is available on request for all models. As an accessory, EC fans are available, allowing the operating range to be further extended.

**Refrigerant circuit**: it is built using components supplied by leading international manufacturers and in compliance with UNI EN 13134. The refrigerant gas is R410A. In its basic configuration, the refrigerant circuit includes: electronic expansion valve, service valves for maintenance and inspection, safety device compliant with current regulations (high- and low-pressure switch), safety valve for the refrigerant, pressure transducers to accurately measure evaporation and condensation pressures, high-capacity replaceable core filter drier to prevent expansion valve blockage and remove any moisture present in the circuit, liquid sight glass for refrigerant charge monitoring, solenoid valve and shut-off valves.

In heat pump versions, the following are also included: 4-way reversing valve, liquid separator, liquid receiver, and outdoor air temperature probe.

**Electrical panel:** fully manufactured and wired in compliance with standard EN 60204, comprising a power section and a control section. The degree of protection of the electrical panel is IP54. The electrical panel is equipped with a terminal block with volt-free contacts for remote ON-OFF.

**Control system**: all units are equipped with a microprocessor-based control board with superheat control logic managed according to the signals sent by the pressure transducers and temperature probes. The CPU also controls the following functions: water temperature regulation, antifreeze protection, compressor start-up and timing, fan and circulation pump management (where present), alarm reset, alarm signalling and operation LEDs. On request, the microprocessor can be connected to remote BMS control systems.

**Control and protection devices**: all units are equipped with the following control and protection devices: phase monitor complete with minimum and maximum voltage relay, which stops the unit if the phase sequence is incorrect or the voltage of at least one phase differs by more than 15% from the others; flow water temperature sensor (with antifreeze function); return water temperature sensor (both installed inside the heat exchanger); low-pressure transducer; high-pressure transducer; discharge temperature sensor on the compressors; safety valve on both the low- and high-pressure sides; suction temperature sensor on the compressors; outdoor air temperature sensor; fan thermal protection; thermal protection on each compressor; water-side differential pressure switch protecting the evaporator; manual reset high-pressure switch installed on the compressor discharge line.

**Hydraulic circuit:** the heat pumps in the series can be supplied with an integrated hydraulic module, which includes, in addition to differential pressure switches, a single or twin pump (one serving as a backup for the other) with AC motor, suitable for chilled water operation and directly managed by the unit's onboard controller.
It is also possible to install an internal buffer storage tank, externally insulated with closed-cell foam material and sized with an adequate capacity to prevent excessive compressor start-stop cycles.

## Operating Areas

**Hot**

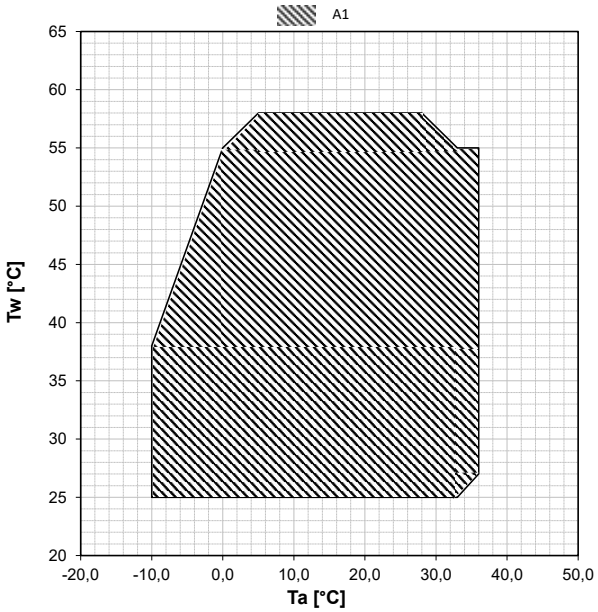


Tw: water temperature - Ta: outdoor air temperature
A1 = HWA1-A/H heating

**Cold**

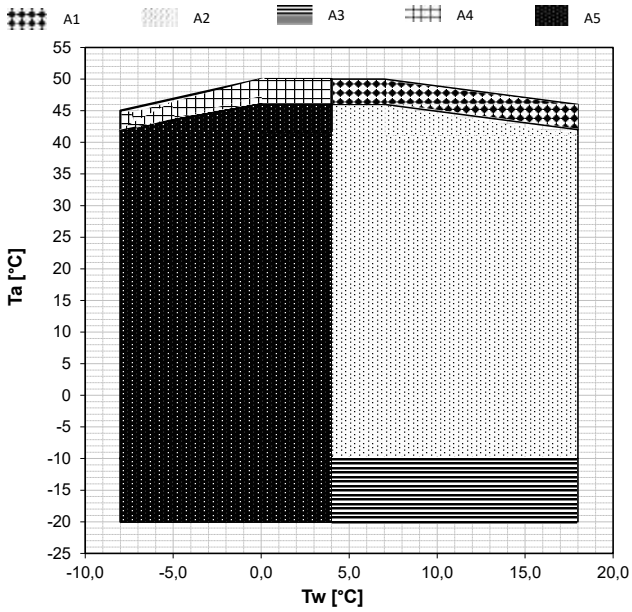


A1 = HWA1-A/H cooling partial load
A2 = HWA1-A/H cooling
A3 = HWA1-A/H cooling with CC accessory for condensation control down to -20°C
A4 = HWA1-A/H BT partial load
A5 = HWA1-A/H BT

## Accessories

### Factory-installed

- **KA1 *** – Antifreeze heater for heat exchanger and pump (if present) – electric heating element installed on the front face of the plate heat exchanger, which is activated when the water temperature inside the exchanger falls below +4°C, and electric heating element that protects the pump motor at low temperatures.
- **KA2** * - Antifreeze protection for heat exchanger, pump and tank (if present) – includes KA1 – in addition to accessory KA1, an immersion heater is added in the tank. The kit consists of: an armored electric heater in AISI 321, a programmable digital temperature controller and a contactor.
- **SL ** –** Silenced version. The silenced unit (equipped with the SL accessory) features an innovative thermo-acoustic jacket on the compressors. This insulation allows a noise reduction of up to 10% at certain compressor rotational frequencies. The special multilayer structure provides thermal insulation that, at very low temperatures, reduces losses by up to 2% compared to standard insulation.
- **SSL ** –** Super-silenced version. The super-silenced unit (equipped with the SSL accessory) includes, in addition to the thermo-acoustic enclosure on the compressors, a special diffuser mounted on the fan. This diffuser increases the fan's efficiency, allowing its speed to be reduced, thereby lowering sound pressure level and energy consumption. In this way, substantial electrical energy savings can be achieved for each fan.
- **C ** –** Ductable version. With the ductable version, the diffuser is used to take advantage of the higher available pressure of the fan and, if required, to duct the air discharge.
- **C(S) ** –** Ductable version with jackets. In addition to the ductable version, thermo-acoustic jackets are installed on the compressors.
- **PS *** –** Reversible heat pump, heating-only version with standard head.
- **PSAP *** –** Reversible heat pump, high-head pump only version.
- **PD *** –** Reversible heat pump, dual-pump version with standard head.
- **PDAP *** –** Reversible heat pump, dual high-head pump version.
- **PS-SI *** –** Reversible heat pump with standard head pump version + tank.
- **PSAP-SI *** –** Reversible heat pump, high-head pump version with storage tank.
- **PD-SI *** –** Reversible heat pump, dual-pump version with standard head + storage tank.
- **PDAP-SI *** –** Reversible-cycle heat pump, high-head twin pump version with buffer tank.
- **TE1** - Special mechanical seal for glycol content above 40% - for water-glycol mixtures with a glycol mass fraction greater than 40% and up to 50%, a different mechanical seal is used to ensure the correct operation of the electric pump.
- **TR2** - Coil anti-corrosion treatment – thanks to this treatment, the coil becomes flexible to withstand thermal contractions and expansions, mechanically resistant, UV-protected and dirt-

** Accessories not usable simultaneously
*** Accessories not usable simultaneously
*** Accessories not usable simultaneously

# Accessories

repellent. Heat transfer losses are very limited. The treatment ensures coil protection under virtually all environmental conditions: from coastal to rural areas, from industrial to urban zones. The treatment withstands 6,000 hours according to ASTM B117. (HWA1-A/H).

- **DS** - The desuperheater includes the addition of a brazed plate heat exchanger made of AISI 316 stainless steel, factory-insulated using closed-cell material.
- **BT** - The BT accessory allows the operating range of the water temperature to be extended down to -8°C. In this case, it is necessary to use a water-glycol mixture.
- **EC** - Modulating EC fan. Includes CC function, condensing pressure control down to -20°C. Mandatory accessory for cooling-only versions, comfort applications, EU market.
- **CC** – Condensation control down to -20°C. Includes the EC accessory.
- **CT** - Condensation control down to -10°C.
- **GR1** - Anti-intrusion kit for refrigeration circuit compartment – installed on the refrigeration circuit compartment to prevent the ingress of foreign objects into the unit.
- **GR2** - Battery compartment anti-intrusion kit – wire mesh to prevent the entry of foreign objects into the coil and to protect the coil from accidental contact by people or objects.
- **GR3** - Anti-intrusion kit for the refrigeration circuit compartment and anti-intrusion kit for the battery compartment.
- **IM** - Circuit breakers on compressors and fans – overcurrent switches applied to compressors and fans, protecting the components from faults caused by possible current spikes.
- **SS** - Soft starter – electronic static starter for inrush current management, installed inside the electrical panel; it allows a reduction of inrush current and of mechanical wear on the motor windings.
- **LQ** – Internal switchboard lights – light for illuminating the interior of the electrical panel, facilitating maintenance for the operator.
- **SH** - Schuko socket (with MCB) - convenience socket located in the electrical panel (maximum 16 A), protected against overloads and short circuits by a miniature circuit breaker.
- **RFM** - Discharge and suction service valve on compressors – shut-off valve installed on the compressor suction and discharge lines, which simplifies maintenance by preventing the need to recover the refrigerant from the entire unit.
- **2SFV** - Changeover valve with double safety valve – the changeover valve allows alternating use of two safety valves, facilitating periodic inspection or replacement while ensuring system operation and maintaining the safety system.
- **KS** - Lifting bracket kit – facilitates lifting and positioning of the unit.
- **CM** - BMS connectivity setup – ModBus protocol included – accessory that enables the connection of the unit to external controllers via serial cable with RS-485 electrical standard and ModBus RTU protocol.
- **ACK6** - Summer/Winter status signaling - auxiliary contactors providing a volt-free contact, allowing remote indication of the operating mode (summer/winter).

## Provided separately

- **AG** - Rubber anti-vibration kit – designed to prevent vibration transmission to the structure; they are to be installed beneath the unit, in the designated mounting holes.
- **AM -** Spring anti-vibration kit – designed to prevent transmission of vibrations to the structure; they must be installed underneath the unit, in the designated holes.
- **FY** - Y-strainer – contains a stainless steel mesh screen (500 µm filtration) that collects solid materials present in the water. Filtration prevents blockage and/or damage to the devices installed downstream of the strainer. Alternatively, it is possible to install a dirt separator that ensures a filtration level not greater than 1 mm (in this case, it is no longer necessary to install the Y-strainer).
- **SAS** - Remote system probe.
- **RV** – Grooved connection joint. To facilitate installation, a carbon steel pipe nipple can be supplied, featuring on one end a grooved connection compatible with the one on the unit and complete with the appropriate coupling for the connection, and on the other end a G 1" 1/2 M threaded connection. The kit consists of 2 nipples and 2 grooved connections to connect the nipples to the unit.
- **ISK**** - USB/RS485 serial converter – interface device capable of reading and writing control registers via the RS485 standard and converting them to a USB port that can be connected to any supervision system.
- **LNC**** - LAN-Wi-Fi router – device that allows the unit to be connected to a local network via Ethernet cable or Wi-Fi coverage for remote monitoring.
- **OVPN**** - 4G LAN-Wi-Fi router with VPN tunnelling – a device that allows you to connect the unit remotely to an industrial router using the secure OPENVPN service.
- **i-CR2**** - Wall-mounted remote control – Modbus remote controller with negative LCD and capacitive keys. The device is intended to be used as a remote unit keypad with local temperature sensing and replicates the functions of the on-board unit controller.
- **Hi-TV415**** - Color touch screen wired remote controller for the centralized management of a cascade of chillers/heat pumps, for up to 7 units.

** Accessories not usable simultaneously

**i-CR2**
Wall-mounted remote control
ACCESSORY

**Hi-TV415**
Touch screen remote controller for cascade management (max 7 units)
ACCESSORY

# Dimensional Drawings

## HWA1-A/H 02109÷04345

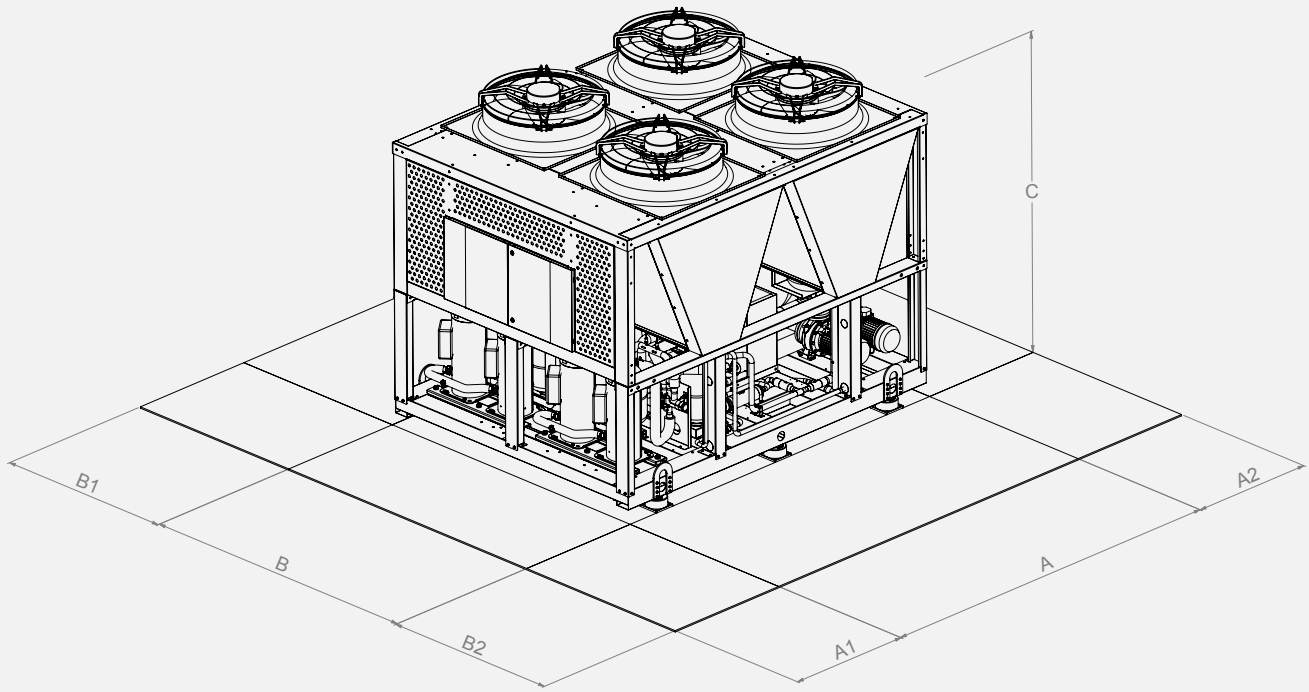


| Model | Dimensions | | | Clearances | | | | User heat exchanger | |
|---|---|---|---|---|---|---|---|---|---|
| | A [mm] | B [mm] | C [mm] | A1[mm] | A2 [mm] | B1 [mm] | B2 [mm] | Type | Ø * |
| 02109 | 2860 | 1100 | 2350 | 1000 | 800 | 1000 | 1000 | Victaulic | DN65 (2” 1/2) |
| 02121 | 2860 | 1100 | 2350 | 1000 | 800 | 1000 | 1000 | Victaulic | DN65 (2” 1/2) |
| 02142 | 4060 | 1100 | 2350 | 1000 | 800 | 1000 | 1000 | Victaulic | DN65 (2” 1/2) |
| 02148 | 4060 | 1100 | 2350 | 1000 | 800 | 1000 | 1000 | Victaulic | DN65 (2” 1/2) |
| 02160 | 4060 | 1100 | 2350 | 1000 | 800 | 1000 | 1000 | Victaulic | DN65 (2” 1/2) |
| 04176 | 2860 | 2200 | 2350 | 1000 | 800 | 1000 | 1000 | Victaulic | DN80 (3”) |
| 04199 | 2860 | 2200 | 2350 | 1000 | 800 | 1000 | 1000 | Victaulic | DN80 (3”) |
| 04215 | 2860 | 2200 | 2350 | 1000 | 800 | 1000 | 1000 | Victaulic | DN80 (3”) |
| 04237 | 2860 | 2200 | 2350 | 1000 | 800 | 1000 | 1000 | Victaulic | DN80 (3”) |
| 04273 | 4060 | 2200 | 2350 | 1000 | 800 | 1000 | 1000 | Victaulic | DN80 (3”) |
| 04304 | 4060 | 2200 | 2350 | 1000 | 800 | 1000 | 1000 | Victaulic | DN80 (3”) |
| 04345 | 4060 | 2200 | 2350 | 1000 | 800 | 1000 | 1000 | Victaulic | DN80 (3”) |

* It depends on the hydronic version – refer to the technical bulletin

| | | | 02109 | 02121 | 02142 | 02148 | 02160 | 04176 |
|---|---|---|---|---|---|---|---|---|
| **Cooling** | Cooling capacity (1) | kW | 103 | 113 | 132 | 138 | 148 | 165 |
| | Total absorbed power (1) | kW | 33,8 | 38,9 | 41,3 | 44,4 | 49,8 | 52,6 |
| | EER (1) | W/W | 3,05 | 2,90 | 3,19 | 3,11 | 2,97 | 3,14 |
| | Cooling capacity (2) | kW | 139 | 151 | 177 | 188 | 202 | 224 |
| | Total absorbed power (2) | kW | 36,5 | 42,7 | 44,1 | 47,7 | 53,0 | 55,7 |
| | EER (2) | W/W | 3,81 | 3,53 | 4,01 | 3,94 | 3,82 | 4,01 |
| | SEER (5) | W/W | 4,35 | 4,36 | 4,38 | 4,73 | 4,50 | 4,61 |
| | Cooling capacity (11) | kW | 63,0 | 68,4 | 78,9 | 82,4 | 90,6 | 97,4 |
| | Total absorbed power (11) | kW | 30,2 | 34,8 | 37,6 | 40,1 | 44,8 | 48,7 |
| | EER (11) | W/W | 2,09 | 1,97 | 2,10 | 2,05 | 2,02 | 2,00 |
| | Water flow rate (1) | l/s | 4,9 | 5,4 | 6,3 | 6,6 | 7,1 | 7,9 |
| | Pressure drops in the heat exchanger, user side (1) | kPa | 30,5 | 36,3 | 37,8 | 41,0 | 38,0 | 36,0 |
| **Heating** | Heating capacity (3) | kW | 113 | 125 | 148 | 154 | 166 | 188 |
| | Total absorbed power (3) | kW | 27,6 | 30,9 | 36,6 | 37,7 | 41,4 | 46,0 |
| | COP (3) | W/W | 4,09 | 4,05 | 4,04 | 4,08 | 4,01 | 4,08 |
| | Heating capacity (4) | kW | 108 | 120 | 142 | 148 | 160 | 179 |
| | Total absorbed power (4) | kW | 32,9 | 37,5 | 43,9 | 45,3 | 49,4 | 55,9 |
| | COP (4) | W/W | 3,30 | 3,20 | 3,22 | 3,26 | 3,23 | 3,21 |
| | SCOP (6) | W/W | 3,72 | 3,77 | 3,62 | 3,69 | 3,68 | 3,90 |
| | Water flow rate (4) | l/s | 5,2 | 5,7 | 6,8 | 7,1 | 7,6 | 8,6 |
| | Pressure drops in the heat exchanger, user side (4) | kPa | 33,5 | 40,5 | 43,0 | 46,6 | 43,6 | 41,8 |
| | Energy efficiency water 35°C/55°C | class | A+/A+ | A+/A+ | A+/A+ | A+/A+ | A+/A+ | A++/A+ |
| **Compressor** | Compressor type | | SCROLL | | | | | |
| | Refrigerant oil (type) | | Emkarate RL 32 3MAF | | | | | |
| | No. of compressors | No. | 2 | 2 | 2 | 2 | 2 | 2 |
| | Standard capacity steps | No. | 2 | 3 | 2 | 3 | 3 | 4 |
| | Oil charge (Circuit 1) | l | 4,44 + 4,44 | 4,44 + 4,44 | 4,44 + 4,44 | 6,3 + 4,44 | 6,3 + 4,44 | 3,25 + 3,25 |
| | Oil load (Circuit 2) | l | - | - | - | - | - | 3,25 + 3,25 |
| | Refrigerant circuits | No. | 1 | 1 | 1 | 1 | 1 | 2 |
| **Refrigerant** | Type | | R410A | | | | | |
| | Refrigerant charge (Circuit 1) (7) | kg | 26,5 | 27,0 | 34,5 | 42,0 | 40,0 | 22,0 |
| | Refrigerant charge (Circuit 2) (7) | kg | - | - | - | - | - | 22,0 |
| | Tons of CO2 equivalent (7) | Ton | 55,3 | 56,4 | 72,0 | 87,7 | 83,5 | 91,9 |
| | Design pressure (high/low) | bar | 40,5/2,5 | 40,5/2,5 | 40,5/2,5 | 40,5/2,5 | 40,5/2,5 | 40,5/2,5 |
| **Outdoor zone fans** | Fan types | | AXIAL | | | | | |
| | No. of fans | No. | 2 | 2 | 3 | 3 | 3 | 4 |
| | Rated power (1) | kW | 1,4 | 1,4 | 1,4 | 1,4 | 1,4 | 1,4 |
| | Maximum power | kW | 3,80 | 3,80 | 5,70 | 5,70 | 5,70 | 7,60 |
| | Maximum absorbed current | A | 3,9 | 3,9 | 3,9 | 3,9 | 3,9 | 3,9 |
| | Standard air flow rate | l/s | 10021 | 9984 | 15109 | 15088 | 15045 | 20954 |
| **Internal heat exchanger** | Internal heat exchanger type | | PHE – PLATE TYPE | | | | | |
| | No. of indoor heat exchangers | No. | 1 | 1 | 1 | 1 | 1 | 1 |
| | Water content | l | 6,87 | 6,87 | 7,88 | 7,88 | 8,89 | 11,40 |
| **Hydraulic circuit** | Max water-side pressure | bar | 12 | 12 | 12 | 12 | 12 | 12 |
| | Max. hydraulic unit pressure (safety valve setting) | bar | 6 | 6 | 6 | 6 | 6 | 6 |
| | Water connections | | 2" 1/2 | 2" 1/2 | 2" 1/2 | 2" 1/2 | 2" 1/2 | 3" |
| | Minimum system water content (8) | l | 490 | 630 | 630 | 820 | 820 | 480 |
| **Sound data** | Sound power (9) | dB (A) | 88 std<br>87 SL<br>84 SSL | 88 std<br>87 SL<br>84 SSL | 88 std<br>87 SL<br>84 SSL | 88 std<br>87 SL<br>84 SSL | 88 std<br>87 SL<br>84 SSL | 89 std<br>88 SL<br>85 SSL |
| | Sound pressure (10) | dB (A) | 56 std<br>55 SL<br>52 SSL | 56 std<br>55 SL<br>52 SSL | 55,9 std<br>54,9 SL<br>51,9 SSL | 55,9 std<br>54,9 SL<br>51,9 SSL | 55,9 std<br>54,9 SL<br>51,9 SSL | 56,9 std<br>55,9 SL<br>52,9 SSL |
| **Electrical data** | Power supply | | 400V/3P/50Hz | | | | | |
| | Max. power input without accessories | kW | 48,9 | 55,0 | 63,1 | 66,9 | 73,0 | 87,9 |
| | Max current absorbed without accessories | A | 83,0 | 93,4 | 107,1 | 113,5 | 123,9 | 149,2 |
| | Maximum inrush current without accessories | A | 285,6 | 332,3 | 346,0 | 358,1 | 368,5 | 289,2 |
| **Weights** | Net shipping weight | kg | 1180 | 1210 | 1470 | 1530 | 1530 | 2030 |
| | Operating weight | kg | 1190 | 1220 | 1480 | 1540 | 1540 | 2040 |

(1) Cooling: outdoor air temperature 35°C; inlet/outlet water temperature 12/7°C.
(2) Cooling: outdoor air temperature 35°C; inlet/outlet water temperature 23/18°C.
(3) Heating: outdoor air temperature 7°C d.b. 6°C w.b.; water inlet/outlet temp. 30/35°C.
(4) Heating: outdoor air temperature 7°C d.b. 6°C w.b.; water inlet/outlet temp. 40/45°C.
(5) Cooling: water inlet/outlet temperature 7/12°C.
(6) Heating: average climatic conditions; Tbiv = -7°C; inlet/outlet water temperature 30/35°C.
(7) Indicative data, subject to change. For the correct data, always refer to the technical nameplate on the unit.
(8) The indicated volume refers to the total required amount; the designer must meet this requirement by taking into account the quantity already present inside the unit, depending on the selected hydronic kit (please check this value in the technical data sheet).
(9) Condition (1); value determined on the basis of measurements carried out in accordance with UNI EN ISO 9614-1
(10) Value calculated from the sound power level using ISO 3744:2010, referred to a distance of 10 m from the unit.
(11) Cooling BT version: outdoor air temperature 35°C, internal heat exchanger water temperature = -3/-8°C. Fluid treated with 35% ethylene glycol.
N.B. The performance data shown are indicative and may be subject to change. Furthermore, the capacities stated at points (1), (2), (3) and (4) are to be understood as referring to the instantaneous power according to UNI EN 14511. The data stated at points (5) and (6) are determined in accordance with UNI EN 14825.

| | | | 04199 | 04215 | 04237 | 04273 | 04304 | 04345 |
|---|---|---|---|---|---|---|---|---|
| **Cooling** | Cooling capacity (1) | kW | 187 | 208 | 225 | 260 | 289 | 325 |
| | Total absorbed power (1) | kW | 59,4 | 67,2 | 77,5 | 80,6 | 92,9 | 112 |
| | EER (1) | W/W | 3,15 | 3,10 | 2,90 | 3,22 | 3,10 | 2,90 |
| | Cooling capacity (2) | kW | 252 | 282 | 301 | 351 | 388 | 434 |
| | Total absorbed power (2) | kW | 63,8 | 71,6 | 83,2 | 87,0 | 101 | 122 |
| | EER (2) | W/W | 3,95 | 3,94 | 3,62 | 4,04 | 3,86 | 3,56 |
| | SEER (5) | W/W | 4,64 | 4,71 | 4,53 | 4,65 | 4,73 | 4,42 |
| | Cooling capacity (11) | kW | 111 | 129 | 140 | 155 | 177 | 203 |
| | Total absorbed power (11) | kW | 54,3 | 60,0 | 69,4 | 72,3 | 84,2 | 99,9 |
| | EER (11) | W/W | 2,04 | 2,15 | 2,02 | 2,14 | 2,10 | 2,03 |
| | Water flow rate (1) | l/s | 8,9 | 10,0 | 10,7 | 12,4 | 13,8 | 15,5 |
| | Pressure drops in the heat exchanger, user side (1) | kPa | 45,4 | 55,7 | 38,5 | 50,7 | 36,8 | 46,0 |
| **Heating** | Heating capacity (3) | kW | 207 | 223 | 246 | 286 | 316 | 356 |
| | Total absorbed power (3) | kW | 50,7 | 54,8 | 61,1 | 69,2 | 78,3 | 88,5 |
| | COP (3) | W/W | 4,09 | 4,07 | 4,02 | 4,13 | 4,04 | 4,02 |
| | Heating capacity (4) | kW | 198 | 214 | 237 | 273 | 303 | 344 |
| | Total absorbed power (4) | kW | 61,5 | 66,0 | 74,0 | 83,8 | 94,7 | 108 |
| | COP (4) | W/W | 3,22 | 3,24 | 3,20 | 3,26 | 3,20 | 3,20 |
| | SCOP (6) | W/W | 3,84 | 3,96 | 4,00 | 3,92 | 3,95 | 4,01 |
| | Water flow rate (4) | l/s | 9,5 | 10,2 | 11,3 | 13,0 | 14,5 | 16,5 |
| | Pressure drops in the heat exchanger, user side (4) | kPa | 50,6 | 58,6 | 42,5 | 55,8 | 40,4 | 51,6 |
| | Energy efficiency water 35°C/55°C | class | A++/A+ | A++/A+ | A++/A+ | A++/A+ | A++/A+ | A++/A+ |
| **Compressor** | Compressor type | | SCROLL | | | | | |
| | Refrigerant oil (type) | | Emkarate RL 32 3MAF | | | | | |
| | No. of compressors | No. | 4 | 4 | 4 | 4 | 4 | 4 |
| | Standard capacity steps | No. | 6 | 4 | 6 | 5 | 5 | 5 |
| | Oil charge (Circuit 1) | l | 4,44 + 3,25 | 4,44 + 4,44 | 4,44 + 4,44 | 6,3 + 4,44 | 6,3 + 6,3 | 6,3 + 6,3 |
| | Oil load (Circuit 2) | l | 4,44 + 3,25 | 4,44 + 4,44 | 4,44 + 4,44 | 4,44 + 4,44 | 4,44 + 4,44 | 4,44 + 4,44 |
| | Refrigerant circuits | No. | 2 | 2 | 2 | 2 | 2 | 2 |
| **Refrigerant** | Type | | R410A | | | | | |
| | Refrigerant charge (Circuit 1) (7) | kg | 18,0 | 25,5 | 28,5 | 43,0 | 47,0 | 50,0 |
| | Refrigerant charge (Circuit 2) (7) | kg | 18,0 | 24,0 | 28,5 | 36,0 | 34,0 | 30,0 |
| | Tons of CO2 equivalent (7) | Ton | 75,2 | 103,4 | 119,0 | 165,0 | 169,1 | 167,0 |
| | Design pressure (high/low) | bar | 40,5/2,5 | 40,5/2,5 | 40,5/2,5 | 40,5/2,5 | 40,5/2,5 | 40,5/2,5 |
| **Outdoor zone fans** | Fan types | | AXIAL | | | | | |
| | No. of fans | No. | 4 | 4 | 4 | 6 | 6 | 6 |
| | Rated power (1) | kW | 1,4 | 1,4 | 1,4 | 1,4 | 1,4 | 1,4 |
| | Maximum power | kW | 7,60 | 7,60 | 7,60 | 11,40 | 11,40 | 11,40 |
| | Maximum absorbed current | A | 3,9 | 3,9 | 3,9 | 3,9 | 3,9 | 3,9 |
| | Standard air flow rate | l/s | 20888 | 20815 | 20738 | 31370 | 31264 | 31109 |
| **Internal heat exchanger** | Internal heat exchanger type | | PHE – PLATE TYPE | | | | | |
| | No. of indoor heat exchangers | No. | 1 | 1 | 1 | 1 | 1 | 1 |
| | Water content | l | 11,40 | 11,40 | 15,50 | 15,50 | 22,10 | 22,10 |
| **Hydraulic circuit** | Max water-side pressure | bar | 12 | 12 | 12 | 12 | 12 | 12 |
| | Max. hydraulic unit pressure (safety valve setting) | bar | 6 | 6 | 6 | 6 | 6 | 6 |
| | Water connections | | 3" | 3" | 3" | 3" | 3" | 3" |
| | Minimum system water content (8) | l | 610 | 610 | 780 | 1020 | 1020 | 1290 |
| **Sound data** | Sound power (9) | dB (A) | 89 std<br>88 SL<br>85 SSL | 89 std<br>88 SL<br>85 SSL | 90 std<br>89 SL<br>86 SSL | 90 std<br>89 SL<br>86 SSL | 91 std<br>90 SL<br>87 SSL | 92 std<br>91 SL<br>88 SSL |
| | Sound pressure (10) | dB (A) | 56,9 std<br>55,9 SL<br>52,9 SSL | 56,9 std<br>55,9 SL<br>52,9 SSL | 57,9 std<br>56,9 SL<br>53,9 SSL | 57,8 std<br>56,9 SL<br>53,9 SSL | 58,8 std/<br>57,8 SL/<br>54,8 SSL | 59,8 std/<br>58,8 SL/<br>55,8 SSL |
| **Electrical data** | Power supply | | 400V/3P/50Hz | | | | | |
| | Max. power input without accessories | kW | 92,8 | 97,8 | 110,0 | 123,8 | 139,8 | 160,1 |
| | Max current absorbed without accessories | A | 157,6 | 166,0 | 186,8 | 210,2 | 237,4 | 271,8 |
| | Maximum inrush current without accessories | A | 360,2 | 368,6 | 425,7 | 454,8 | 482,0 | 597,2 |
| **Weights** | Net shipping weight | kg | 2060 | 2100 | 2130 | 2680 | 2880 | 2900 |
| | Operating weight | kg | 2070 | 2110 | 2140 | 2700 | 2900 | 2930 |

(1) Cooling: outdoor air temperature 35°C; inlet/outlet water temperature 12/7°C.
(2) Cooling: outdoor air temperature 35°C; inlet/outlet water temperature 23/18°C.
(3) Heating: outdoor air temperature 7°C d.b. 6°C w.b.; water inlet/outlet temp. 30/35°C.
(4) Heating: outdoor air temperature 7°C d.b. 6°C w.b.; water inlet/outlet temp. 40/45°C.
(5) Cooling: water inlet/outlet temperature 7/12°C.
(6) Heating: average climatic conditions; Tbiv = -7°C; inlet/outlet water temperature 30/35°C.
(7) Indicative data, subject to change. For the correct data, always refer to the technical nameplate on the unit.
(8) The indicated volume refers to the total required amount; the designer must meet this requirement by taking into account the quantity already present inside the unit, depending on the selected hydronic kit (please check this value in the technical data sheet).
(9) Condition (1); value determined on the basis of measurements carried out in accordance with UNI EN ISO 9614-1
(10) Value calculated from the sound power level using ISO 3744:2010, referred to a distance of 10 m from the unit.
(11) Cooling BT version: outdoor air temperature 35°C, internal heat exchanger water temperature = -3/-8°C. Fluid treated with 35% ethylene glycol.
N.B. The performance data shown are indicative and may be subject to change. Furthermore, the capacities stated at points (1), (2), (3) and (4) are to be understood as referring to the instantaneous power according to UNI EN 14511. The data stated at points (5) and (6) are determined in accordance with UNI EN 14825.

# Price list

| HWA1-A/H | | | 02109 | 02121 | 02142 | 02148 | 02160 | 04176 |
|---|---|---|---|---|---|---|---|---|
| HWA1-A/H | Reversible heat pump | € | 44.901 | 47.604 | 56.139 | 57.284 | 60.951 | 75.920 |

| FACTORY-MOUNTED ACCESSORIES | | | | | | | | |
|---|---|---|---|---|---|---|---|---|
| 2SFV | Double safety valve | € | 427 | 427 | 427 | 427 | 856 | 856 |
| ACK6 | Summer-Winter Indication | € | 213 | 213 | 213 | 213 | 213 | 213 |
| BT | Reversible heat pump, BT version | € | 4.408 | 4.408 | 5.570 | 6.964 | 8.108 | 4.367 |
| C | Ductable version | € | 3.475 | 3.475 | 5.614 | 5.614 | 5.614 | 5.614 |
| CC | Condensation control down to -20°C (Only with EC fans) | € | 2.138 | 2.138 | 2.941 | 2.941 | 2.941 | 3.742 |
| C(S) | Ductable version with compressor soundproofing | € | 4.492 | 4.600 | 6.812 | 6.812 | 7.172 | 7.299 |
| CM | Serial communication module for Modbus | € | 850 | 850 | 850 | 850 | 850 | 850 |
| CT | Condensation control down to -10°C | € | 390 | 390 | 390 | 390 | 578 | 578 |
| DS | Partial heat recovery heat pump (desuperheater circuit) | € | 3.250 | 3.590 | 5.091 | 5.939 | 5.128 | 8.151 |
| EC | EC fan (included in C, BT, SSL versions). DC control included | € | 2.138 | 2.138 | 2.941 | 2.941 | 2.941 | 3.742 |
| GR1 | Anti-intrusion kit for refrigeration circuit compartment | € | 2.230 | 2.230 | 2.723 | 2.723 | 2.723 | 2.852 |
| GR2 | Anti-intrusion battery compartment kit | € | 776 | 776 | 776 | 776 | 776 | 776 |
| GR3 | Anti-intrusion kit for battery compartment and circuit | € | 3.006 | 3.006 | 3.498 | 3.498 | 3.498 | 3.627 |
| IM | Magnetic circuit breakers on compressors and fans | € | 869 | 869 | 869 | 869 | 1.524 | 1.764 |
| KA1 | Adhesive heater for heat exchanger + pump heater (if present). Not available for units with tank | € | 253 | 253 | 253 | 253 | 253 | 253 |
| KA2 | Adhesive heater exchanger + pump heater (if present) + heater | € | 936 | 936 | 936 | 936 | 936 | 936 |
| KS | Lifting bracket kit | € | 294 | 294 | 294 | 294 | 294 | 294 |
| LQ | Internal electrical panel lights | € | 468 | 468 | 468 | 468 | 468 | 468 |
| PD | Twin pump, standard head | € | 7.217 | 7.217 | 7.217 | 7.217 | 7.217 | 8.101 |
| PD-SI | Dual standard-head pump + tank | € | 10.552 | 10.552 | 11.962 | 11.962 | 11.962 | 12.163 |
| PDAP | Dual high-head pump | € | 8.287 | 8.287 | 8.287 | 9.623 | 9.891 | 9.891 |
| PDAP-SI | Double high-head pump + tank | € | 11.889 | 12.565 | 14.035 | 14.035 | 14.035 | 14.035 |
| PS-SI | Standard head pump + tank | € | 7.552 | 7.552 | 8.755 | 8.755 | 8.755 | 8.755 |
| PS | Standard head pump | € | 4.278 | 4.278 | 4.278 | 4.278 | 4.278 | 4.278 |
| PSAP | High-head pump | € | 4.946 | 4.946 | 4.946 | 6.215 | 6.215 | 6.215 |
| PSAP-SI | High head pump + tank | € | 8.622 | 8.622 | 9.824 | 9.824 | 9.824 | 9.824 |
| RFM | Delivery and suction valves for compressors | € | 422 | 422 | 843 | 843 | 843 | 843 |
| SH | Schuko socket (with miniature circuit breaker) | € | 280 | 280 | 280 | 280 | 280 | 280 |
| SL | Silenced version | € | 1017 | 1.125 | 1.198 | 1.198 | 1.558 | 1.684 |
| SS | Soft starter | € | 3.826 | 5.104 | 5.104 | 5.104 | 5.514 | 5.514 |
| SSL | Ultra-silent version | € | 3.604 | 3.604 | 4.993 | 5.480 | 5.480 | 7.217 |
| TE1 | Special mechanical seal for glycol >40% | € | 375 | 375 | 375 | 576 | 576 | 576 |
| TR2 | Cu/Al coil with Silver Line anti-corrosion treatment - Cu | € | 3.475 | 3.876 | 4.544 | 5.079 | 5.079 | 5.346 |
| ACCESSORIES SUPPLIED SEPARATELY | | | | | | | | |
| AG | Rubber anti-vibration mounts | € | 749 | 749 | 1.110 | 1.110 | 1.110 | 1.110 |
| AM | Spring anti-vibration mounts | € | 1.929 | 2.560 | 2.560 | 2.560 | 2.560 | 2.560 |
| FY | Y-strainer | € | 180 | 180 | 180 | 259 | 259 | 387 |
| Hi-TV415 | Touchscreen remote control | € | 659 | 659 | 659 | 659 | 659 | 659 |
| i-CR2 | Wall-mounted remote control | € | 319 | 319 | 319 | 319 | 319 | 319 |
| RV | Starter kit consisting of 2 jaws and 2 plain stubs | € | 155 | 155 | 155 | 155 | 155 | 155 |
| SAS | Remote sensor | € | 48 | 48 | 48 | 48 | 48 | 48 |

For accessories of the DAS monitoring system (ISK, LNC, OVPN), see chapter “Connection devices for Maxa DAS supervision system”

# Price list

| HWA1-A/H | | | 04199 | 04215 | 04237 | 04273 | 04304 | 04345 |
|---|---|---|---|---|---|---|---|---|
| HWA1-A/H | Reversible heat pump | € | 84.984 | 88.384 | 90.930 | 103.923 | 115.397 | 120.082 |

| | | | | | | | | |
|---|---|---|---|---|---|---|---|---|
| **FACTORY-MOUNTED ACCESSORIES** | | | | | | | | |
| 2SFV | Double safety valve | € | 856 | 856 | 856 | 856 | 856 | 856 |
| ACK6 | Summer-Winter Indication | € | 213 | 213 | 213 | 213 | 213 | 213 |
| BT | Reversible heat pump, BT version | € | 5.363 | 5.582 | 7.484 | 5.680 | 2.336 | 5.698 |
| C | Ductable version | € | 6.763 | 6.763 | 6.763 | 10.961 | 10.961 | 12.297 |
| CC | Condensation control down to -20°C (Only with EC fans) | € | 3.742 | 3.742 | 3.742 | 6.015 | 6.015 | 6.015 |
| C(S) | Ductable version with compressor soundproofing | € | 8.528 | 8.528 | 8.667 | 12.866 | 12.979 | 14.315 |
| CM | Serial communication module for Modbus | € | 850 | 850 | 850 | 850 | 850 | 850 |
| CT | Condensation control down to -10°C | € | 578 | 578 | 578 | 578 | 578 | 578 |
| DS | Partial heat recovery heat pump (desuperheater circuit) | € | 4.347 | 4.521 | 6.014 | 6.387 | 6.317 | 10.108 |
| EC | EC fan (included in C, BT, SSL versions). DC control included | € | 3.742 | 3.742 | 3.742 | 6.015 | 6.015 | 6.015 |
| GR1 | Anti-intrusion kit for refrigeration circuit compartment | € | 2.852 | 2.852 | 2.852 | 3.344 | 3.344 | 3.344 |
| GR2 | Anti-intrusion battery compartment kit | € | 1.102 | 1.102 | 1.403 | 1.403 | 1.671 | 1.671 |
| GR3 | Anti-intrusion kit for battery compartment and circuit | € | 3.954 | 3.954 | 4.256 | 4.749 | 5.016 | 5.016 |
| IM | Magnetic circuit breakers on compressors and fans | € | 1.764 | 1.764 | 1.764 | 2.607 | 2.607 | 3.074 |
| KA1 | Adhesive heater for heat exchanger + pump heater (if present). Not available for units with tank | € | 253 | 253 | 253 | 253 | 253 | 253 |
| KA2 | Adhesive resistance of heat exchanger + pump resistance (if present) + resistance | € | 936 | 936 | 936 | 936 | 936 | 936 |
| KS | Lifting bracket kit | € | 294 | 294 | 294 | 294 | 294 | 294 |
| LQ | Internal electrical panel lights | € | 468 | 468 | 468 | 468 | 468 | 468 |
| PD | Twin pump, standard head | € | 8.101 | 8.634 | 8.634 | 10.105 | 10.560 | 11.495 |
| PD-SI | Dual standard-head pump + tank | € | 12.163 | 15.371 | 16.307 | 17.911 | 17.911 | 19.247 |
| PDAP | Dual high-head pump | € | 9.891 | 10.159 | 10.560 | 11.763 | 12.832 | 13.366 |
| PDAP-SI | Double high-head pump + tank | € | 11.495 | 11.763 | 12.297 | 13.366 | 13.767 | 13.767 |
| PS | Standard head pump | € | 4.278 | 4.278 | 4.278 | 5.881 | 6.629 | 6.629 |
| PS-SI | Standard head pump + tank | € | 10.693 | 10.693 | 11.227 | 12.297 | 12.699 | 12.699 |
| PSAP | High-head pump | € | 6.215 | 6.483 | 6.483 | 7.485 | 7.753 | 8.020 |
| PSAP-SI | High head pump + tank | € | 16.709 | 17.643 | 18.178 | 18.178 | 19.782 | 21.118 |
| RFM | Delivery and suction valves for compressors | € | 843 | 843 | 843 | 843 | 1.186 | 1.186 |
| SH | Schuko socket (with miniature circuit breaker) | € | 280 | 280 | 280 | 280 | 280 | 280 |
| SL | Silenced version | € | 1.764 | 1.764 | 1.904 | 1.904 | 2.019 | 2.019 |
| SS | Soft starter | € | 7.648 | 7.648 | 7.648 | 7.859 | 10.195 | 11.561 |
| SSL | Ultra-silent version | € | 8.555 | 9.223 | 9.357 | 13.633 | 14.169 | 14.169 |
| TE1 | Special mechanical seal for glycol >40% | € | 576 | 576 | 576 | 576 | 576 | 576 |
| TR2 | Cu/Al coil with Silver Line anti-corrosion treatment - Cu | € | 5.346 | 6.149 | 6.149 | 8.421 | 9.357 | 9.357 |
| **ACCESSORIES SUPPLIED SEPARATELY** | | | | | | | | |
| AG | Rubber anti-vibration mounts | € | 1.354 | 1.354 | 1.354 | 1.354 | 2.325 | 2.531 |
| AM | Spring anti-vibration mounts | € | 2.517 | 2.517 | 2.517 | 2.517 | 3.264 | 3.264 |
| FY | Y-strainer | € | 387 | 439 | 439 | 439 | 491 | 491 |
| Hi-TV415 | Touchscreen remote control | € | 659 | 659 | 659 | 659 | 659 | 659 |
| i-CR2 | Wall-mounted remote control | € | 319 | 319 | 319 | 319 | 319 | 319 |
| RV | Starter kit consisting of 2 jaws and 2 plain stubs | € | 155 | 155 | 206 | 206 | 206 | 206 |
| SAS | Remote sensor | € | 48 | 48 | 48 | 48 | 48 | 48 |
| **STANDARD** | | | | | | | | |
| | Remote probe enablement | € | standard | | | | | |
| | Second setpoint enable | € | standard | | | | | |

For accessories of the DAS monitoring system (ISK, LNC, OVPN), see chapter "Connection devices for Maxa DAS supervision system"

# Available functions table

## GI / GI3 hardware expansion modules

| | GI module | | | | | |
|---|---|---|---|---|---|---|
| | i-32V5 | i-32V5 SL | MIDI | i-HPV5 | i-MAX | HWA1 |
| | | | | | | |
| | 10 ÷ 16 | 12 ÷ 16 | | | | |
| Remote On/Off | □ | □ | □ | □ | □ | □ |
| Domestic hot water management | □ | □ | □ | □ | □ | X |
| Domestic hot water heater integration | □ | □ | □ | ■ | ■ | X |
| Integration of system resistance | □ | □ | □ | ■ | ■ | ■ |
| Boiler enable integration | □ | □ | □ | ■ | ■ | ■ |
| Digital contact, dual setpoint | □ | □ | □ | □ | ■ | ■ |
| Digital summer-winter contact | □ | □ | □ | □ | ■ | ■ |
| Operating mode indication | □ | □ | □ | ■ | ■ | ■ |
| Defrost cycle in progress notification | □ | □ | □ | ■ | ■ | ■ |
| Dual-zone management | ■ | ■ | ■ | ■ | ■ | ■ |
| Alarm/trip notification | □ | □ | □ | ■ | ■ | ■ |
| Block notification | □ | □ | □ | ■ | ■ | ■ |
| Remote water system probe | ■ | ■ | ■ | ■ | ■ | ■ |
| Secondary circulator | ■ | ■ | ■ | ■ | ■ | ■ |
| Mixing valve | ■ | ■ | ■ | ■ | ■ | X |
| Solar thermal integration | ■ | ■ | ■ | ■ | ■ | X |
| Weather compensation | □ | □ | □ | □ | □ | □ |

Function available only with accessory GI ■
Function available as standard, no accessories required □
Function not available X

* The GI is not compatible with i-32V5 and i-32V5 SL sizes 06A, 08A, 10T A, 12T A, 14T A, 16T A, 18T A

# Remote Controllers Compatibility Table

| | i-32V5 | i-32V5 SL | MIDI | i-HPV5 | i-MAX | HWA1 |
|---|---|---|---|---|---|---|
| | | | | | | |
| e-Lite | ■ | ■ | ■ | ■ | X | X |
| e-Pro | ■ ** | ■ ** | ■ | ■ * | X | X |
| i-CR2 | ■ | ■ | ■ | ■ | ■ | ■ |
| Hi-TV415 *** | ■ | ■ | ■ | ■ | ■ | ■ |

** Energy measurements not available*
*** No backward compatibility with models 06, 08, "T"*
**** Necessary accessory for cascade management*

Compatible ■
Not compatible X

## GI3 Module

| i-32V5 * | i-32V5 SL * | i290 0106÷0118 | i290 0121÷0127 | i290 0240÷0250 | |
|---|---|---|---|---|---|
| □ | □ | □ | □ | □ | Remote On/Off |
| □ | □ | □ | □ | □ | Domestic hot water management |
| □ | □ | □ | □ | ■ | Domestic hot water heater integration |
| □ | □ | □ | □ | ■ | Integration of system resistance |
| □ | □ | □ | □ | ■ | Boiler enable integration |
| □ | □ | □ | □ | ■ | Digital contact, dual setpoint |
| □ | □ | □ | □ | □ | Digital summer-winter contact |
| □ | □ | □ | □ | ■ | Operating mode indication |
| □ | □ | □ | □ | ■ | Defrost cycle in progress notification |
| ■ | ■ | ■ | ■ | ■ | Dual-zone management |
| □ | □ | □ | □ | ■ | Alarm/trip notification |
| □ | □ | □ | □ | ■ | Block notification |
| □ | □ | □ | □ | ■ | Remote water system probe |
| ■ | ■ | ■ | ■ | ■ | Secondary circulator |
| ■ | ■ | ■ | ■ | ■ | Mixing valve |
| ■ | ■ | ■ | ■ | ■ | Solar thermal integration |
| □ | □ | □ | □ | □ | Weather compensation |

Function available only with accessory GI3 ■
Function available as standard, no accessories required □
Function not available X

* The GI3 is not compatible with i-32V5 and i-32V5 SL sizes 10, 12, 14, 16

| i290 0106÷0118 | i290 0121÷0127 | i290 0240÷0250 | HWA1 | HWA2 | |
|---|---|---|---|---|---|
| ■ | ■ | ■ | X | X | e-Lite |
| ■ | ■ | ■ * | X | X | e-Pro |
| ■ | ■ | ■ | ■ | X | i-CR2 |
| ■ | ■ | ■ | ■ | ■ | Hi-TV415 *** |

# My Maxa

## Simplicity, comfort, and complete control at your fingertips with the My Maxa app.

## The My Maxa app allows remote management of MAXA heat pumps connected via the e-Pro controller.

Through the My Maxa APP, one or more MAXA heat pump installations can be associated with your user profile, thereby granting you full remote control. The main operations that can be performed using the My Maxa APP are:

- switching the heat pump on and off
- the adjustment of the operating temperature of the heat pump in the different operating modes (heating, cooling, and domestic hot water)
- the transition from manual to programmed operation
- the display of the main operating data of the heat pump
- the weekly time scheduling of the main functions of the heat pump
- the visualization of energy data through time-based charts
- changing the desired room temperature (only with room thermostat function enabled)
- the display of the room temperature (only with the room thermostat function enabled).

Available on the App Store

ANDROID APP ON Google play

### Multi-system management

The app is designed to simplify the management of multiple heat pumps associated with the same user profile.
A single interface provides a comprehensive overview of all installed systems.

### Room temperature control

In **room thermostat** mode, the app allows you to change the set temperature at any time, ensuring precise and immediate control. This function makes it possible to rapidly adapt the system to the users' varying needs.

### Immediate monitoring

The **control mode** displays the main operating parameters: the domestic hot water temperature, the current flow temperature, and the outdoor temperature.
A single glance provides an overview of the entire situation.

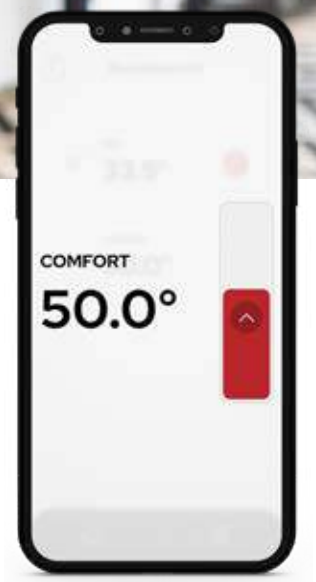


## Change of operating mode

From the dedicated section, it is possible to change the heat pump's **operating mode**. This option simplifies seasonal changeover management and allows the heat pump to be adapted to the current needs of the system.

## Preset setpoints

Each operating mode allows you to set two customized temperature values, "ECO" and "COMFORT." This function is particularly useful for programming different usage scenarios, helping to reduce energy consumption without sacrificing comfort.

## Water temperature control

Water temperature management is made immediate thanks to a dedicated slider. The setting is intuitive and, at the same time, precise.

## Chrono-programming

It is possible to schedule both the desired room temperature and the water temperature in the different operating modes.

## Real-time energy data

The energy data of the heat pump are always available and presented in a clear and straightforward manner.

## Historical analysis

Through dedicated charts, it is possible to view the history of energy data—an advanced tool for monitoring system efficiency and optimizing its performance.

e-Pro is the new smart remote controller by Maxa, designed to provide advanced and intuitive control of heat pumps in residential and commercial applications.
Thanks to 2.4 GHz Wi-Fi connectivity and integration with the My Maxa app, it is possible to manage heating, cooling and domestic hot water production functions simply and efficiently, even remotely, directly from a smartphone. Equipped with a 4" color graphic LCD display with touch-screen technology, e-Pro combines elegant design with a modern, intuitive interface designed for wall installation.
The user can quickly access all operating settings through dedicated pages, such as heat pump control or the room chronothermostat, ensuring a comprehensive and immediate user experience.
e-Pro also incorporates advanced energy efficiency functions, such as automatic room temperature control and dynamic adjustment of the supply temperature based on outdoor conditions.
The result is an intelligent management system that optimizes energy consumption, enhances comfort, and ensures maximum efficiency in every season.

**e-Pro is compatible with Maxa heat pumps from the i-290 (0106–0127), i-32V5, i-32V5SL, Atria, and i-32V5 Midi ranges.**

## Main functions

- Temperature control for heating, cooling and domestic hot water production
- Real-time diagnostics and data visualization
- Setting and management of setpoints
- Daily and weekly scheduling for cooling, heating, domestic hot water production, and room temperature
- Selection of climatic curves for cooling and heating
- The main European languages are supported

## Integrated Energy Efficiency

The advanced energy management system automatically reduces the screen brightness when not in use and adjusts the lighting to ambient conditions. e-Pro consumes less than 1 W in standby, complying with the strictest CE certifications.

## Connectivity and Automation

Thanks to the built-in Wi-Fi module, the e-Pro can be connected to the local Wi-Fi network, ensuring automatic updates and advanced services.

## Tailored Comfort

Equipped with an integrated thermostat and customizable modes, e-Pro maintains an ideal climate at all times thanks to daily, weekly, or holiday scheduling.

## Intuitive Use

The touch screen interface simulates the presence of backlit keys, providing an intuitive user experience.
Dynamic icons offer immediate visual feedback on the status of the heat pump and on active functions, ensuring fast and easy navigation.

## Guaranteed Reliability

Each e-Pro undergoes rigorous quality testing with advanced diagnostic functions that ensure maximum long-term reliability. Firmware self-recovery and intelligent alert management ensure that the device is always ready for use.

# Price list

| | | | |
|---|---|---|---|
| e-Pro | Wired Remote control, Wi-Fi connected | code | 0100225#20010 |
| | | € | 463 |

# e-Lite

## Multifunction touch screen wired control

e-LITE is a remote control with a touch-screen interface and capacitive color LCD display, designed for wall-mounted installation in indoor residential and commercial environments.
Compatible with MAXA heat pumps and water chillers, it uses Modbus communication to ensure simple and effective integration. In addition to serving as a remote control panel for the unit, it is equipped with a local sensor for temperature detection, thus ensuring precise and reliable comfort management.
e-LITE can be configured with a single machine and does not allow network management of multiple units, while still ensuring accurate, centralized control of system performance.

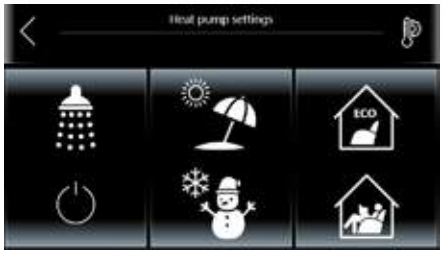


**e-Lite is compatible with Maxa heat pumps from the i-290, i-32V5, i-32V5SL, Atria, i-32V5 Midi, and i-HPV5 ranges..**

The e-Lite remote controller replicates all the functions available on board the MAXA unit, including:

- Switching on and off
- Setting the operating mode
- Setpoint configuration (heating, cooling, domestic hot water production)
- Real-time diagnostics and data visualization
- DHW production enablement
- Enable dual setpoint.
- Dynamic setpoint enablement
- Room thermostat
- 12 Vdc power supply included
- Micro SD slot for firmware updates

## Price list

| | | | |
|---|---|---|---|
| e-Lite | Multifunction touch screen remote controller | code | 011049#0101 |
| | | € | 463 |

Hi-TV415 is a touchscreen remote control designed to ensure efficient management of both single systems and complex systems consisting of multiple units in cascade. Thanks to its integrated temperature and humidity sensor, the device not only enables thermo-hygrometric monitoring of the environment, but also provides thermostat functionality with dual setpoint control, ideal for underfloor radiant systems equipped with dehumidification units.
Equipped with an intuitive color graphical interface enhanced by easily understandable synoptic diagrams, Hi-TV415 simplifies the use and configuration of all functions. It can be used as a remote panel for a single chiller or heat pump, as a room thermostat for zone management, or as a centralized control system for a network of chillers, heat pumps, and RFC systems.

The controller monitors and periodically polls the network, with a cycle time that varies according to the size of the fan coil and/or heat pump system. In multicircuit systems, the parameters and resources relating to the first circuit are displayed. Hi-TV415 therefore represents a complete, versatile and intuitive solution for advanced plant control.

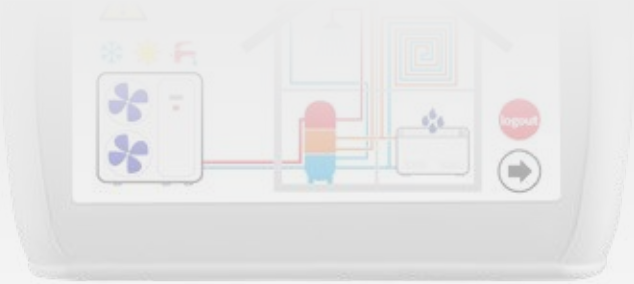

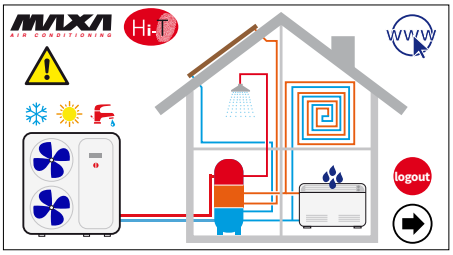


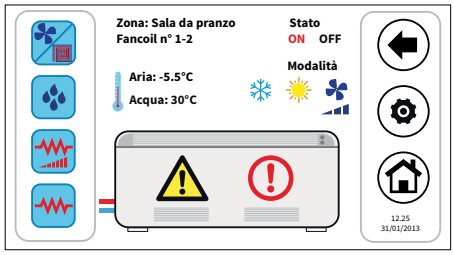


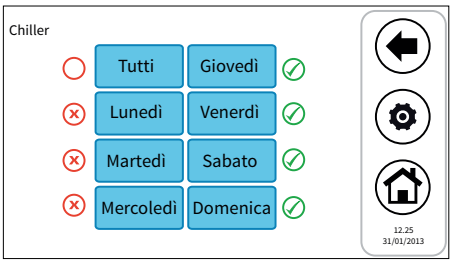


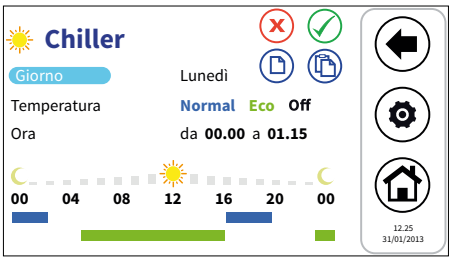


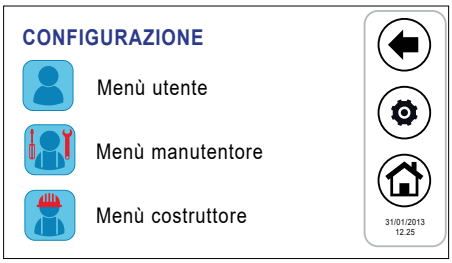


## Price list

| | | | |
|---|---|---|---|
| Hi-TV415 | Multifunction touch screen remote controller | code | 011049#0098 |
| | | € | 659 |

# i-CR2

## Touch-screen wired control

Touchscreen remote control with negative LCD display and capacitive keys, designed for residential and commercial applications. Developed as a Modbus remote keypad, it allows management of a single unit by conveniently replicating all main on-board control functions, such as probe reading and parameter access, directly from the home or installation site.

Configurable exclusively with a single unit and not with machine networks, i-CR2 stands out for its ease of use, elegant design, and reliability, making it the ideal solution for the daily control of heat pumps or water chillers.

Other important functions are listed below:

- Dual setpoint.
- Weekly programmable room thermostat.
- Anti-legionella cycle.
- Alarm history.
- Room thermostat

**ON/OFF BACKLIGHT**
Function operating at thermostat level; switches the LED and backlight on and off. When in OFF mode, the keypad does not accept commands. This function has no effect on unit control, but enables/disables interaction with the thermostat. It allows exiting the menu. If pressed for 3 seconds, it activates standby mode and locks the keypad (the padlock icon appears). This function has no effect on unit control, but enables/disables user interaction with the thermostat keypad.

**UP**
Allows you to move to a higher-level menu or increase the value of a parameter

**DOWN**
Allows you to move to a lower-level menu or to decrease the value of a parameter.

**CHRONOTHERMOSTAT**
Allows you to set the operating ranges for thermostat control based on the room temperature measured by the sensor integrated in the i-CR2.

**SEASON CHANGE BUTTON**
A prolonged 3-second press is required to change the operating mode (season) or to switch the heat pump or chiller to OFF.

**ENTER KEY**
Allows entering the menus or confirming a parameter

## Price list

| | | | |
|---|---|---|---|
| i-CR2 | Touch-screen wired control | € | 319 |

# Connect Box

## Gateway Wireless

Connect Box is the ModBus-to-Wi-Fi converter that enables direct interfacing between MAXA heat pumps and the local network, allowing full management via the Maxa Connect application. Once connected to the home router, the device immediately links the heat pump to the MAXA cloud, providing simple and instant access to all operating information.

**Connect Box is compatible with Maxa heat pumps from the i-290, i-32V5, i-32V5SL, i-32V5 Midi and i-HPV5 ranges.**

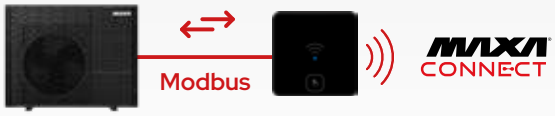

Through the **Maxa Connect** app, available both as a mobile application and as a Web App accessible from any browser, you can monitor key parameters in real time, such as system water temperatures, set operating modes, and check instantaneous power and the thermal energy produced. The intuitive interface ensures a comprehensive user experience that is accessible to everyone.

The ease of installation and seamless integration with the onboard electronics make Connect Box an ideal solution not only for residential applications, but also for commercial and tertiary settings, where it enables plant managers to directly and precisely control operating parameters.

### Intuitive user interface

User-friendly interface that enables users to easily monitor and manage their systems and installations.

### Diagnostics and monitoring

Advanced diagnostic tools enable real-time monitoring of system status, allowing rapid identification and remote resolution of issues. View and access a complete history of alarms/events.

### Safety

Use of cutting-edge security technologies to protect data and ensure secure communication with service technicians.

### Remote configuration

The platform allows remote adjustment of system and installation settings, minimizing the need for a technician to be physically present on site. 24/7 access to installations. Management of schedules and modification of installation parameters.

### Start My Connect

Connect Box allows authorized service centers to interact with the heat pump through the dedicated professional app: Start My Connect.

The latter enables the pairing of the Connect Box with the user's heating system.

## Price list

| | | | |
|---|---|---|---|
| Connect Box | Gateway Wireless | code | 011049#0103 |
| | | € | 318 |

# Maxa Das

## Supervision, monitoring and analysis system

The MAXA DAS software was developed to meet the need for a complete, high-performance program for carrying out parameter configurations and testing on the production line.
It makes it possible to collect all information related to the unit's production, and allows the test engineer to analyze process data intuitively through a programmable graph.
In addition, it is designed to be used by after-sales office staff, service centers and installers as an analysis and monitoring tool for MAXA units during commissioning, maintenance, and in the event of operating faults.

**Compatible with i-290, i-32V5, i-32V5 MIDI, i-HPV5, i-MAX, HWA1-A, HWA1-A/H.**

### Maxa SCADA

It is the beating heart of the DAS system: a PC software application associated with a license—free of charge if linked to the purchase of a connection device—that acquires all data and parameter settings of the unit or system in real time and sends them to the graphical visualization system.

- Multi-connection system with local units or units integrated into a LAN/Wi-Fi network, also suitable for remote connections.
- Simple and intuitive tree-based selection of the model to be monitored.
- Forced unit status.
- Monitoring of system variables, with an alarm notification system via pop-up or email.
- Unit parameterization.
- Process logging.
- Event logging and data traffic debugging.
- Import of new models or updated revisions via quick library import.
- User access level management.
- Available in Italian and English
- Online help
- Multiple levels of user management.

### Maxa TREND

Useful for heat pumps and cooling-only units, it displays all ongoing processes through configurable, multi-level customizable graphs.

- Graphical analysis of the acquired measurements with customizable traces.
- List of alarm activations and deactivations and timestamp.
- Cursor functionality for viewing and navigating the plotted data.
- Zoom for analysis on a temporal detail or a specific range of values.
- Real-time update of an ongoing process.

### Connectivity

There are three ways to connect our heat pump to the DAS monitoring system, each with a different level of operability.

- **Serial converter - Accessory ISK**: Direct connection to the units via RS-485 serial cable and USB. For quick maintenance performed directly on the units.
- **LAN-WiFi Router - Accessory LNC**: Connection of the units to a local network via Ethernet cable or WiFi coverage. For local remote monitoring, ideal for residential and commercial applications.
- **4G LAN-WiFi Router with VPN Tunnel - OVPN** Accessory: Remote connection of units via industrial router using a secure, protected OPENVPN service. For unlimited long-distance monitoring worldwide.

## Price list

| | | | |
|---|---|---|---|
| ISK | USB RS-485 serial converter, includes one Maxa DAS license | code | 011049#0065 |
| | | € | 132 |
| Low Noise Cabin | Local LAN/Wi-Fi gateway, includes one Maxa DAS license | code | 011049#0068 |
| | | € | 329 |
| OVPN | Remote OpenVPN converter LAN/Wi-Fi/4G, includes one Maxa DAS license | code | 011049#0069 |
| | | € | 1.018 |
| High-gain antenna | High-gain antenna, accessory for 011049#0069 | code | 011049#0070 |
| | | € | 285 |
| OpenVPN Client first year for Computer | Client subscription on computer – 1st year for 011049#0069 | code | 011049#0071 |
| | | € | 141 |
| OpenVPN Client first year per machine | Client subscription for machine 1st year for 011049#0069 | code | 011049#0072 |
| | | € | 141 |
| OpenVPN subsequent years | One-year extension for each client subscription (Computer / Machine) for 011049#0069 | code | 011049#0073 |
| | | € | 71 |

# Controls for hydronic terminals

## Airmust 3V A1 / 010 A1

### Wi-Fi touch screen control / chronothermostat for wall installation

- 3.5" color LCD touch screen
- LCD resolution: 480x320 px
- Power supply 230V
- Maximum current (3V A1): 3A
- Thermostat function included
- Modbus
- 2.4G Wi-Fi connectivity
- APP available for **Android and iOS: My House Pro**
- 3-speed version (3V) or for 0–10 V motors (010)
- For 2-pipe and 4-pipe systems
- Window contact input
- Water probe inlet
- Automatic brightness
- Room temperature sensor
- Relative humidity sensor
- Operating mode management
- Mounting pitch with European standard
- Temperature and humidity measurement history
- Automatic changeover from cooling to heating mode
- Automatic management of daylight saving time / standard time changeover
- Multilingual
- Weekly schedule
- Weekly scheduling

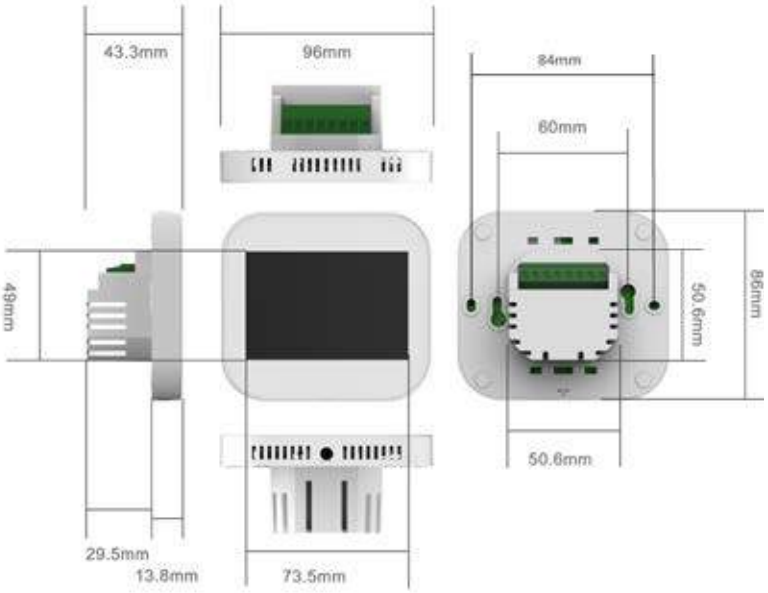


## CRA

### Three-speed wall-mounted thermostat

- Wall-mounted thermostat 230V
- Relay contacts 5A/230V
- 3-speed fan selector
- Off-On-Manual Selector
- Management of 2-pipe system with or without 230V on-off valves

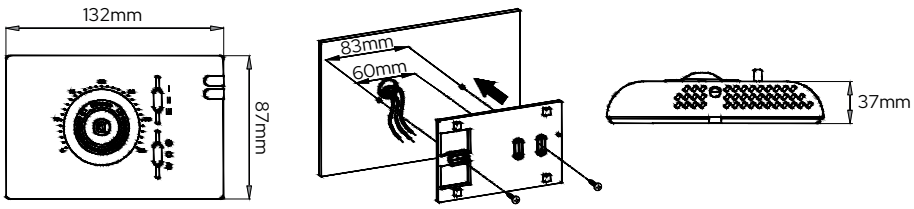

# Airmust BMCP A1

## Wi-Fi touch-screen controller for on-board installation on VSL fan coil units

- LCD display with five touch function keys
- Power supply 230V
- Maximum current: 5 A
- Thermostat function included
- Modbus
- 2.4G Wi-Fi connectivity
- App available on the stores for **Android and iOS: SmartLife**
- For 3-speed fan coil units
- For 2-pipe and 4-pipe systems
- Window contact input
- Water probe inlet
- Room temperature sensor
- Operating mode management
- Automatic changeover from cooling to heating mode
- Weekly scheduling (App only)

# Airmust P

## Wi-Fi touch-screen controller for wall-mounted installation

- LCD display with five touch function keys
- Power supply 230V
- Maximum current: 5 A
- Thermostat function included
- Modbus
- 2.4G Wi-Fi connectivity
- App available on the stores for **Android and iOS: SmartLife**
- For 3-speed fan coil units
- For 2-pipe and 4-pipe systems
- Window contact input
- Water probe inlet
- Room temperature sensor
- Operating mode management
- Automatic changeover from cooling to heating mode
- Weekly scheduling (App only)

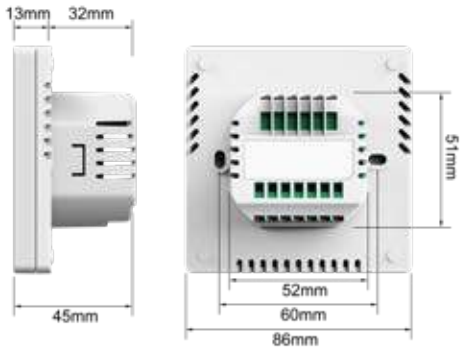


* Images related to Airmust BMCP A1 and Airmust P models

## Price list

| | Code | € |
|---|---|---|
| AIRMUST 3V A1 | 011993#780000 | 236 |
| AIRMUST 010 A1 | 011993#790000 | 244 |
| AIRMUST BMCP A1 | 012508#260000 | 244 |
| AIRMUST P | 012508#170000 | 244 |
| CRA | 011995#0036020 | 105 |
| SND-A3* | 011993#800000 | 10 |

* Compatible only with Airmust 3V A1 and 010A1 models

## Compatibility table

| | CRA | AIRMUST BMCP A1 | AIRMUST P | AIRMUST 3V A1 | AIRMUST 010 A1 |
|---|---|---|---|---|---|
| GRIMPER MSL | X | X | ■ (3) | X | X |
| GRIMPER VSL | X | ■ (3) | ■ (3)(5) | ■ (3)(5) | X |
| GRIMPER BSL | X | X | ■ (3) | X | X |
| VE: VMI, VMF, OMP, OMI | ■ | X | ■ (1) (3) | ■ (1) | X |
| VE: VII, VIF, OIP, OII | ■ | X | ■ (1) (3) | ■ (1) | X |
| VE: VMI, VMF, OMP, OMI Vers. MB | X | X | X | X | ■ (1) (4) |
| VE: VII, VIF, OIP, OII Vers. MB | X | X | X | X | ■ (1) (4) |
| HCN | ■ (2) | X | ■ (1) (3) | ■ (1) (2) | X |
| HCN - Vers. MB | X | X | X | X | ■ (1) (4) |
| HCNP | ■ (2) | X | ■ (1) (3) | ■ (1) (2) | X |
| HCNP - Vers. MB | X | X | X | X | ■ (1) (4) |
| HCNA | ■ (2) | X | ■ (1) (3) | ■ (1) (2) | X |
| HCNA - Vers. MB | X | X | X | X | ■ (1) (4) |

(1) Not compatible with TMB – SND-A3 accessory required
(2) Check the power consumption; if necessary, add the SDI accessory.
(3) If necessary, add the STSL accessory for minimum winter temperature control.
(4) SDI accessory not required
(5) For wall mounting only

Compatible ■
Not compatible X

## Wiring diagrams

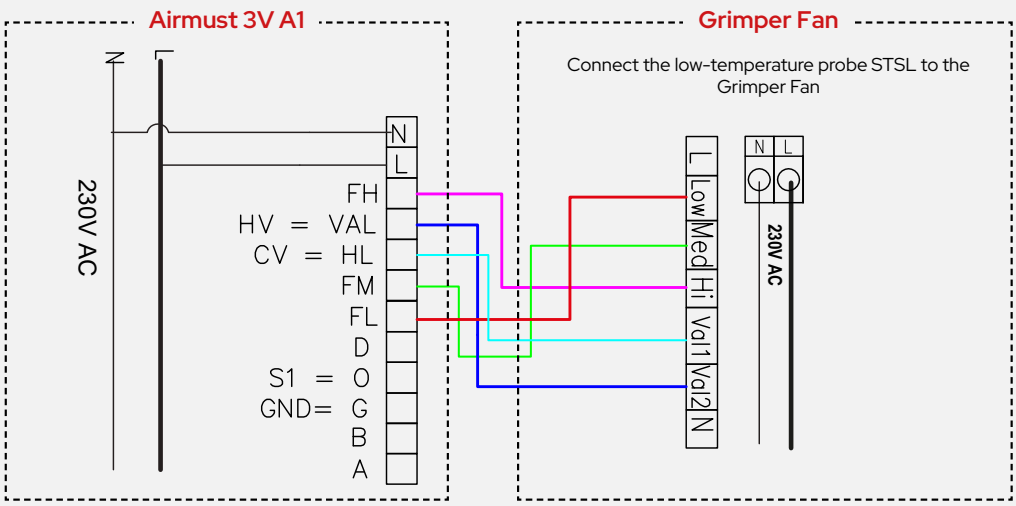


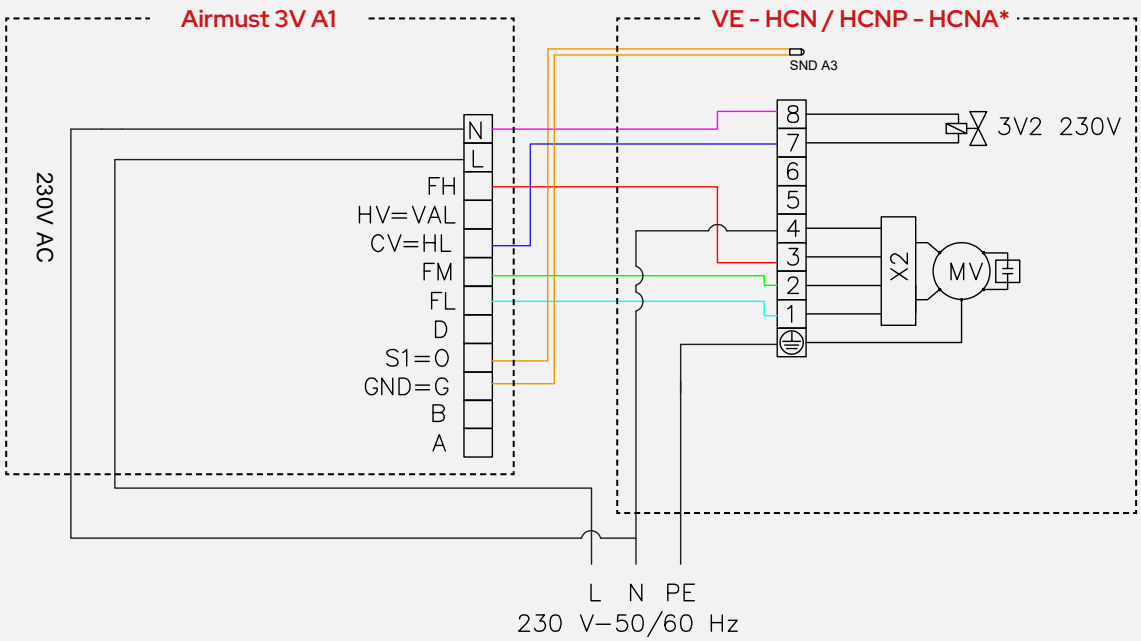


* Check the absorbed power; if necessary, add the SDI accessory.

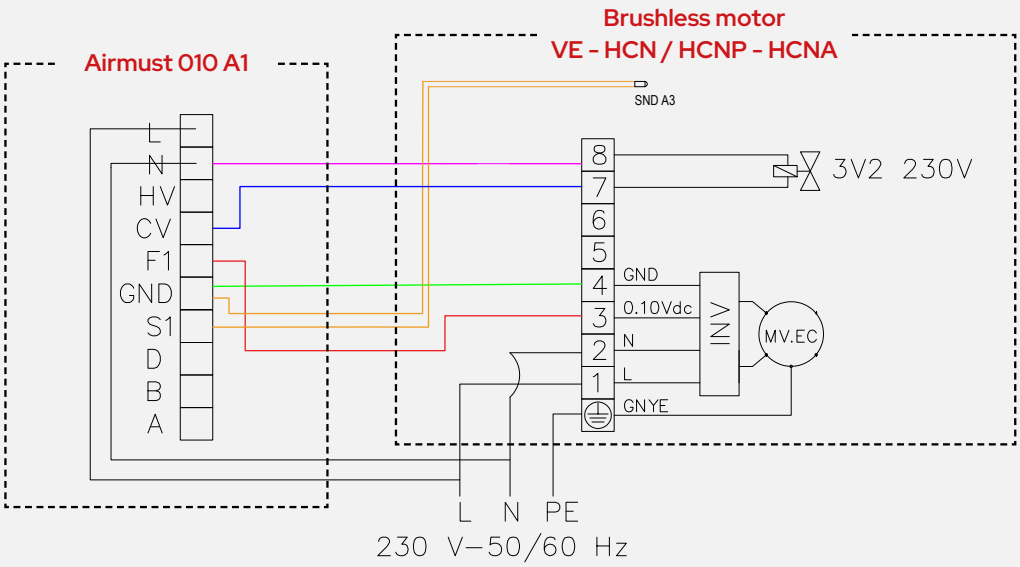

# Wiring diagrams

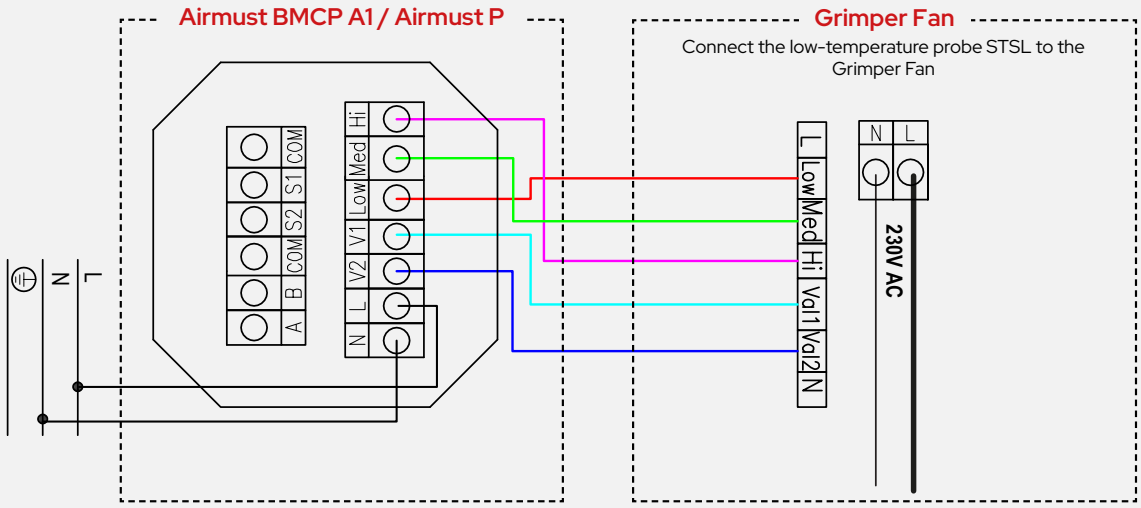


AIRMUST BMCP A1 / P: Parameter setting menu:
No. 1 = 1.
Leave all the others as default.
Warning: do not connect the supplied probe

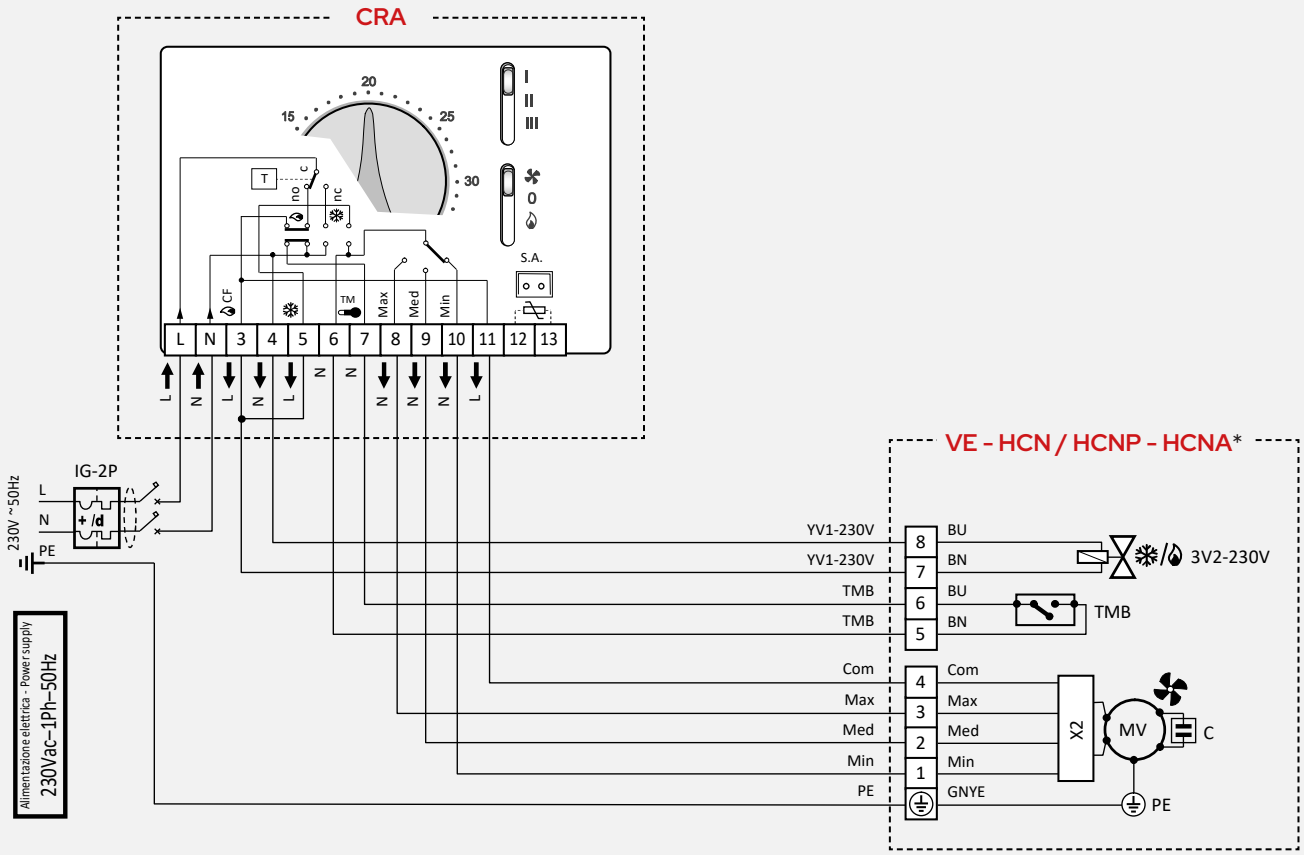


* Check the absorbed power; if necessary, add the SDI accessory.

# Grimper Fan

## Ultra-slim fan coil unit

0.9 kW÷3.4 kW

The **12cm thick Grimper Fan range** is 10% thinner than its competitors in the slim segment.
Il **pannello hardened glass front** is interchangeable on both sides to allow piping to be connected on the left/right side without additional operation.

Una a feature that distinguishes the range is the **assenza front intake grilles**, thanks to the innovative ventilation system that improves battery performance when working at negative pressure.

Tutti the models are equipped with **ventilatori EC,** which improves quietness ensuring a noise level of less than **20 dB(A)**.

| LOW ENERGY CONSUMPTION | ULTRA-THIN 12 CM | INFRARED REMOTE CONTROL including BSL / MSL | FAN EC | MINIMUM NOISE LEVEL 20 DB(A) | VSL: HYDRAULIC CONNECTIONS Right and Left | WI-FI OPTIONAL | APP AVAILABLE WITH AIRMUST | AIRMUST WIRED CONTROLLER accessory |
|---|---|---|---|---|---|---|---|---|

The absence of front grilles allows for versatile Grimper Fan installation even in the tightest spaces.
The MSL and VSL models are compatible with 2- and 4-pipe installations, while the BSL model is compatible with 2-pipe installations.

Completano the range i **filtri stainless steel pleated** with unlimited life, the **ventilatore aluminum tangential** and an included infrared **telecomando** (BSL, MSL models).

The entire Grimper Fan range offers simple and intuitive management thanks to the use of a touch screen control wire (accessory), and a convenient dedicated app. IT is possible to manage one or more connected units, both in residential and commercial settings.

La the range is made up of three models:

### Grimper Fan MSL

High-wall installation

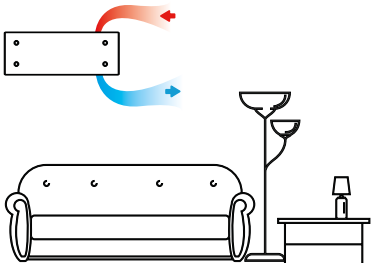

### Grimper Fan VSL

Floor or ceiling installation

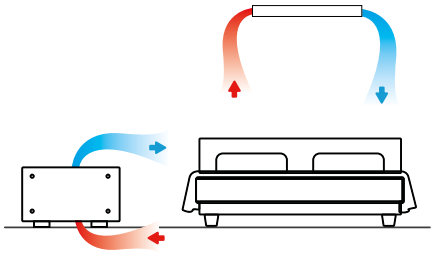

### Grimper Fan BSL

Bathroom installation

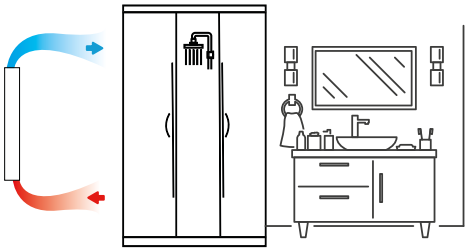

## Accessories

### Supplied separately, common to the range

- **STSL**: Minimum water temperature sensor

### Exclusive accessories for VSL model

- **2V2VSL**: 2-way straight valve kit with microswitch for VSL 09-27
- **2V2VSL34**: 2-way straight valve kit with microswitch for VSL 34
- **3V2VSL**: 3-way bypass valve kit with microswitch, 2-pipe, for VSL 09–27
- **3V2VSL34**: 3-way bypass valve kit with microswitch, 2-pipe, for VSL 34
- **3V4VSL**: 3-way bypass valve kit with micro switch, 4-pipe, for VSL
- **PEP09**: Rear aesthetic panel VSL 09
- **PEP18**: Rear aesthetic panel VSL 18
- **PEP27**: Rear aesthetic panel VSL 27
- **PEP34**: Rear aesthetic panel VSL 34

- **P-VSL**: Floor anchoring feet for VSL
- **VASL09**: Tray for horizontal installation VSL 09
- **VASL18**: Drip tray for horizontal installation VSL 18
- **VASL27**: Drip tray for horizontal installation VSL 27
- **VASL34**: Drip tray for horizontal installation VSL 34

## Exclusive accessories for MSL model

- **2V2MSL**: 2-way straight valve kit with microswitch for MSL 12–17
- **2V2MSL25**: 2-way straight valve kit for MSL 25
- **3V2MSL**: 3-way bypass valve kit, 2-pipe, for MSL 12-17
- **3V2MSL25**: 3-way bypass valve kit, 2-pipe, for MSL 25

## Exclusive accessories for BSL model

- **2V2BSL**: 2-way straight valve kit
- **3V2BSL**: 2-pipe 3-way bypass valve kit

| | | | 12 | 17 | 25 |
|---|---|---|---|---|---|
| MSL | Total cooling capacity (max / med / min) | kW | 1,20 / 0,81 / 0,70 | 1,70 / 1,20 / 0,90 | 2,45 / 1,60 / 1,18 |
| | Heating capacity (max / med / min) | kW | 1,68 / 1,14 / 0,96 | 2,45 / 1,90 / 1,53 | 3,30 / 2,20 / 1,70 |
| | Air flow rate (min–max) | m³/h | 155-315 | 240-450 | 310-540 |
| | Minimum sound pressure level (SPL) | dB(A) | 23,0 | 23,4 | 25,0 |
| | Electric power (min–max) | W | 4-11 | 5-14 | 8-17 |
| | Power supply voltage | V-Hz | 220-50 | 220-50 | 220-50 |
| | Battery connections | | 1/2" GF | 1/2" GF | 1/2" GF |
| | Low-power DC motor | | yes | yes | yes |
| | Aluminum tangential fan | | yes | yes | yes |
| | Remote control | | yes | yes | yes |
| | LCD display | | yes | yes | yes |
| | Pleated stainless steel filter | | yes | yes | yes |
| | Front panel in tempered glass crystal | | yes | yes | yes |
| | Unit frame in powder-coated steel | | yes | yes | yes |

| | | | 09 | 18 | 27 | 34 |
|---|---|---|---|---|---|---|
| VSL | Total cooling capacity (max / med / min) | kW | 0,88 / 0,79 / 0,45 | 1,81 / 1,45 / 0,98 | 2,70 / 2,20 / 1,70 | 3,38 / 2,75 / 2,13 |
| | Heating capacity (max / med / min) | kW | 1,10 / 0,90 / 0,61 | 2,40 / 1,50 / 1,16 | 3,20 / 2,40 / 1,75 | 4,23 / 3,40 / 2,41 |
| | Air flow rate (min–max) | m³/h | 80-180 | 155-315 | 240-450 | 310-540 |
| | Minimum sound pressure level (SPL) | dB(A) | 20,5 | 21,6 | 23,5 | 21,7 |
| | Electric power (min–max) | W | 3-12 | 4-13 | 5-14 | 8-17 |
| | Power supply voltage | V-Hz | 220-50 | 220-50 | 220-50 | 220-50 |
| | Battery connections | | 1/2" GF | 1/2" GF | 1/2" GF | 3/4" GM |
| | Low-power DC motor | | yes | yes | yes | yes |
| | Aluminum tangential fan | | yes | yes | yes | yes |
| | Remote control | | no | no | no | no |
| | LCD display | | no | no | no | no |
| | Pleated stainless steel filter | | yes | yes | yes | yes |
| | Front panel in tempered glass crystal | | yes | yes | yes | yes |
| | Unit frame in powder-coated steel | | yes | yes | yes | yes |

| | | | 12 |
|---|---|---|---|
| BSL | Total cooling capacity (max / med / min) | kW | 1,20 / 0,90 / 0,60 |
| | Thermal power (max / med / min) | kW | 1,45 / 1,10 / 0,72 |
| | Air flow rate (min–max) | m³/h | 120-225 |
| | Minimum sound pressure level (SPL) | dB(A) | 19,1 |
| | Electric power (min–max) | watt | 4-11 (150*) |
| | Power supply voltage | V-Hz | 220-50 |
| | Battery connections | | 3/4" GM |
| | Low-power DC motor | | yes |
| | Aluminum tangential fan | | yes |
| | Remote control | | yes |
| | LCD display | | yes |
| | Pleated stainless steel filter | | yes |
| | Front panel in tempered glass crystal | | yes |
| | Unit frame in powder-coated steel | | yes |

Cooling test conditions: Room temperature: 27 °C - 47% RH, Water temperature (in/out): 7/12 °C
Heating test conditions: ambient temperature: 20 °C, inlet water temperature: 50 °C, water flow rate as in cooling mode.

*Electric towel warmer heating element

## Dimensional Drawings

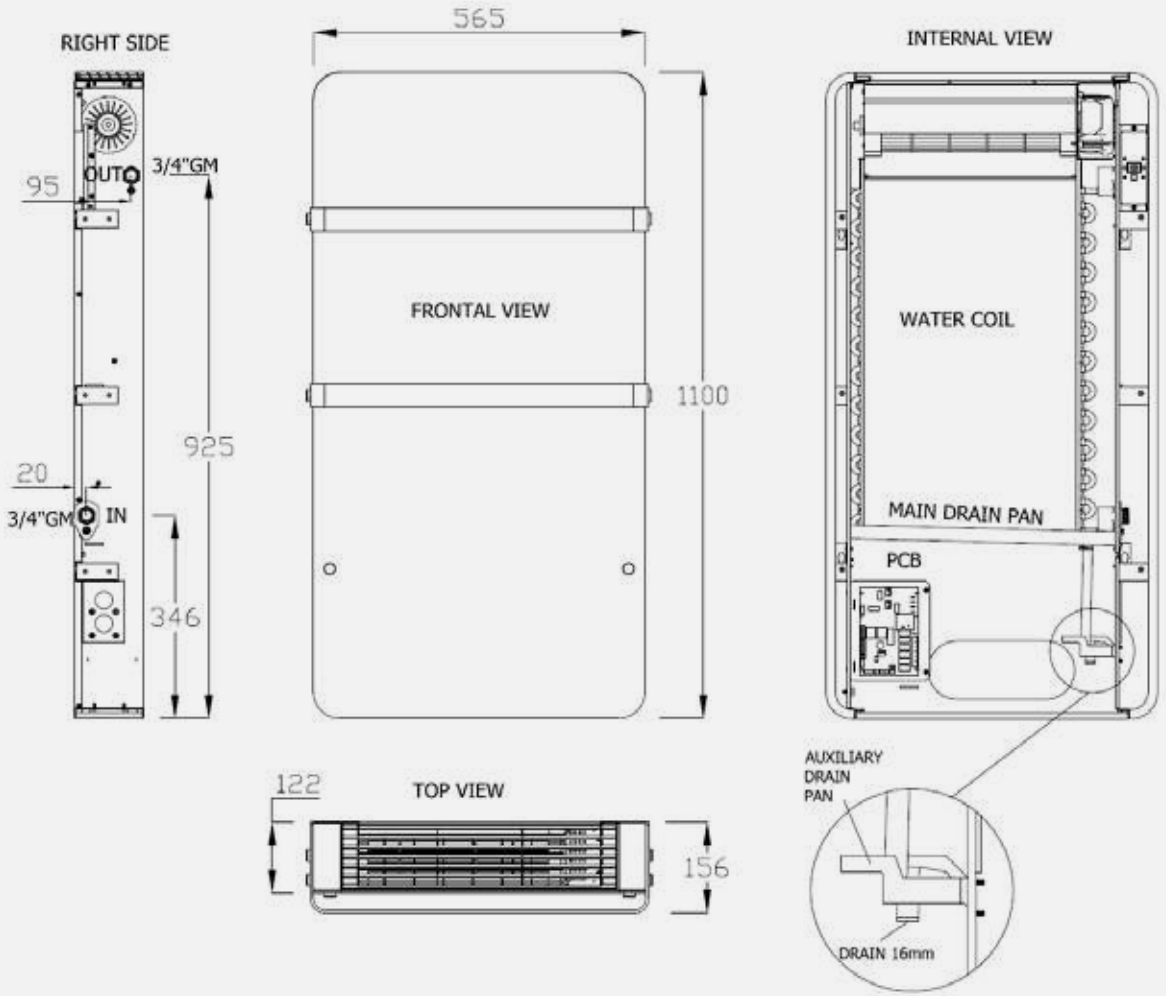


| | 12 |
|---|---|
| Kg | 18 |

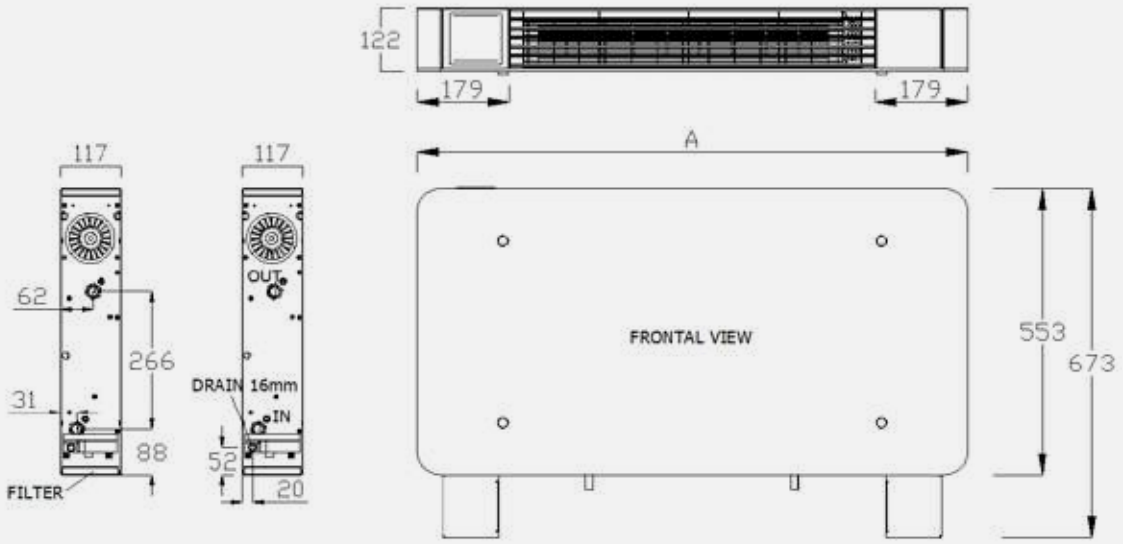


| | 09 | 18 | 27 | 34 |
|---|---|---|---|---|
| A | 681 | 873 | 1.065 | 1.257 |
| Kg | 18 | 21 | 24 | 27 |

Dimensions in mm

## Dimensional Drawings

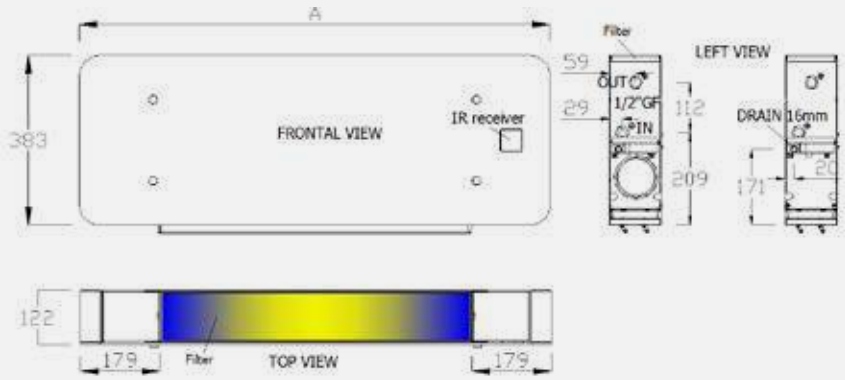


| | 12 | 17 | 25 |
|---|---|---|---|
| A | 873 | 1.065 | 1.257 |
| Kg | 16 | 17 | 20 |

Dimensions in mm

## Price list

| Grimper Fan VSL | | | 09 | 18 | 27 | 34 |
|---|---|---|---|---|---|---|
| VSL | Fan coil unit for low-wall and horizontal ceiling installation | code | 011518#040009 | 011518#040018 | 011518#040027 | 011518#040034 |
| | | € | 659 | 724 | 855 | 1.015 |

| EXCLUSIVE ACCESSORIES FOR VSL MODEL | | | | |
|---|---|---|---|---|
| | | Compatibility | Code | € |
| 2V2VSL | 2-way valve kit | VSL 9÷27 | 012508#090009 | 236 |
| 3V2VSL | 3-way bypass valve kit, 2-pipe system | | 012508#140009 | 222 |
| 3V4VSL | 4-pipe bypass 3-way valve kit | | 012508#080000 | 445 |
| 2V2VSL34 | 2-way valve kit with microswitch | VSL 34 | 012508#090034 | 236 |
| 3V2VSL34 | 3-way bypass valve kit with microswitch, 2-pipe | VSL 34 | 012508#140034 | 222 |
| P-VSL | Floor-mounting feet | VSL 9–34 | 012508#100000 | 85 |
| PEP09 | Rear aesthetic panel | VSL 09 | 012508#130009 | 152 |
| PEP18 | Rear aesthetic panel | VSL 18 | 012508#130018 | 152 |
| PEP27 | Rear aesthetic panel | VSL 27 | 012508#130027 | 152 |
| PEP34 | Rear aesthetic panel | VSL 34 | 012508#130034 | 152 |
| VASL09 | Drip tray for horizontal installation | VSL 09 | 012508#120009 | 145 |
| VASL18 | Drip tray for horizontal installation | VSL 18 | 012508#120018 | 145 |
| VASL27 | Drip tray for horizontal installation | VSL 27 | 012508#120027 | 145 |
| VASL34 | Drip tray for horizontal installation | VSL 34 | 012508#120034 | 145 |

| Grimper Fan BSL | | | 12 |
|---|---|---|---|
| BSL | Hydronic fan coil unit for the bathroom | code | 011518#050012 |
| | | € | 1.290 |

| EXCLUSIVE ACCESSORIES FOR BSL MODEL | | | | |
|---|---|---|---|---|
| | | Compatibility | Code | € |
| 2V2BSL | 2-way valve kit | BSL 12 | 012508#090000 | 317 |
| 3V2BSL | 3-way bypass valve kit, 2-pipe system | BSL 12 | 012508#070012 | 300 |

| Grimper Fan MSL | | | 12 | 17 | 25 |
|---|---|---|---|---|---|
| MSL | Hydronic fan coil unit for wall installation | code | 011518#030012 | 011518#030017 | 011518#030025 |
| | | € | 969 | 1.054 | 1.186 |

| EXCLUSIVE ACCESSORIES FOR MSL MODEL | | | | |
|---|---|---|---|---|
| | | Compatibility | Code | € |
| 2V2MSL | 2-way valve kit | MSL 12÷17 | 012508#090018 | 229 |
| 2V2MSL25 | 2-way valve kit | MSL 25 | 012508#090027 | 229 |
| 3V2MSL | 3-way bypass valve kit, 2-pipe system | MSL 12÷17 | 012508#140018 | 247 |
| 3V2MSL25 | 3-way bypass valve kit, 2-pipe system | MSL 25 | 012508#140027 | 247 |

| ACCESSORIES SUPPLIED SEPARATELY COMMON TO THE RANGE | | Code | € |
|---|---|---|---|
| STSL | Minimum water temperature probe | 012508#060000 | 35 |

For the wired controller price lists, refer to the pages at the beginning of the chapter.

# VE: VMI, VMF, OMP, OMI

## Fan coil unit with AC or brushless DC motor, complete with cabinet

1.4 kW÷9.49 kW

- Structure in galvanized sheet metal with pre-painted casing and ABS components, complete with thermal and acoustic insulation.
- Complete with regenerable filter.
- Standard gravity-drain condensate collection tray **(for horizontal units only).**
- Six-speed centrifugal fans, three of which are connected in the standard configuration **(no MB).**
- Three-row heat exchange coils with copper tubes and aluminum fins featuring a hydrophilic surface treatment for rapid condensate drainage.
- The installation of valve kits is recommended for every type of system.

### S version

- Version with silenced motor, reduced condenser
- Thermal and acoustic insulation with reinforced anti-vibration system

### MB version

- Brushless motor
- Ventilation modulation 0–100%

### Version 4

- Version with second hydronic coil
- For 4-pipe systems
- Additional coil for heating only

### Configurations

**VMI**: Vertical unit with bottom return air

**OMP**: Horizontal rear return air

**VMF**: Vertical unit with front air return

**OMI**: Horizontal unit, bottom return air

### Versions

#### Standard

- **VE VMI**: Vertical, bottom return air
- **VE VMF**: Vertical front return
- **VE OMP**: Horizontal unit with rear return air
- **VE OMI**: Horizontal bottom return

#### Standard with Brushless Motor

- **VE VMI MB**: Vertical, bottom return with MB
- **VE VMF MB**: Vertical front return with MB
- **VE OMP MB**: Horizontal rear return with MB
- **VE OMI MB**: Horizontal unit with bottom return and MB

#### Muted

- **VE VMI S**: Vertical unit with bottom return, soundproofed
- **VE VMF S**: Vertical, front return, soundproofed
- **VE OMP S**: Horizontal with rear intake, soundproofed
- **VE OMI S**: Horizontal unit with bottom return, soundproofed

#### Silenced with brushless motor

- **VE VMI S MB**: Vertical unit with bottom return, soundproofed, with MB
- **VE VMF S MB**: Vertical unit, bottom return, soundproofed with MB
- **VE OMP S MB**: Horizontal unit with rear intake, soundproofed, with MB
- **VE OMI S MB**: Horizontal unit with bottom return, soundproofed, with MB

Available in a 4-pipe version. Refer to the price list for the codes.
Standard VE with left-hand connection. When ordering, it is possible to request connections on the right-hand side.

# Accessories

| | | | | | |
|---|---|---|---|---|---|
| | **P** | Feet (supplied separately) | | **PCPB** | Middle rear closing panel in pre-painted sheet metal |
| | **PCPF** | Lower rear closing panel in pre-painted sheet metal | | **PCB** | Lower closure panel without grille in pre-painted sheet metal |
| | **PMP1** | Condensate pump (maximum water flow rate 8 l/h at 0 m.w.c., water flow rate 6.5 l/h at 1 m.w.c., water flow rate 4 l/h at 3 m.w.c., water flow rate 0 l/h at 6 m.w.c.) equipped with an alarm contact 8A@250V (suitable for all VERTICAL versions) | | **PMP2** | Condensate pump (maximum water flow rate 8 l/h at 0 m.w.c., water flow rate 6.5 l/h at 1 m.w.c., water flow rate 4 l/h at 3 m.w.c., water flow rate 0 l/h at 6 m.w.c.) equipped with 8A@250V alarm contact (suitable for all HORIZONTAL versions). |
| | **VA** | Auxiliary drip tray for vertical versions (included with horizontal versions) | | **CVC** | Onboard electronic control 230Vac with OFF/Summer/Winter + 3 fan speeds + thermostat with/without valves (including "Mammut" MOR terminal block) |
| | **CVA** | Unit-mounted 3-speed control (including "Mammut" MOR terminal block). | | **CBB** | On-unit controller for brushless motor, 2/4-pipe management with/without valves ("Mammut" MOR terminal block included). Compatible with TMB. |
| | **CVD1** | Microprocessor-based on-machine control unit, 230Vac, with 2/4-pipe management with or without valves (MOR 'Mammut' terminal block included). Compatible with TMB. | | **SND-W4** | Water temperature probe (NTC type, 4700 Ohm @ 25°C) with adjustable minimum setpoint, 1 m cable length. Alternative to TMB thermostat, compatible with CBB and CVD1. |
| | **SDI.4 X3A** | 4-output relay board. Suitable for controlling up to 4 three-speed motors. For AC motors only. Maximum rating: 4 x 3 A 230 Vac. | | **MOR** | "Mammut"-type terminal block included when purchasing the fan coil unit complete with on-board controller. Must be ordered separately for wall-mounted controllers. |
| | **2V2** | 2-way valves for 2-pipe systems, with 230V actuator | | **3V2-25-1NO** | 3-way valves for 2-pipe systems, with a 230V servo-controlled actuator fitted with a limit switch. |
| | **2V4** | 2-way valves for 4-pipe system, with 230V actuator | | **3V4** | 3-way valves for 4-pipe systems, with 230V actuator |
| | **TEL** | System for remote-control management. Main board + air probe + water probe + IR receiver + remote control (management of 2/4-pipe systems, with/without valves). Fan: 7A–230Vac. Valves: 2A–230Vac. ("Mammut" MOR terminal block included). | | **TMB** | Low-temperature bimetallic thermostat: automatically stops the fan if the temperature of the water entering the radiator falls below 32°C during the heating season (winter). Compatible with CRA, CVC, CVA, CBB and CVD1. |

| | VE | | | 13 | 23 | 33 | 43 | 53 | 63 | 73 | 83 | 93 | 103 |
|---|---|---|---|---|---|---|---|---|---|---|---|---|---|
| 3 ROWS ** | Cooling capacity (1) * | max | W | 1.500 | 2.000 | 2.530 | 3.020 | 3.570 | 4.250 | 5.520 | 6.420 | 7.530 | 9.020 |
| | | med | W | 1.317 | 1.755 | 2.264 | 2.702 | 3.521 | 3.991 | 5.211 | 6.062 | 7.107 | 8.515 |
| | | min | W | 1.169 | 1.557 | 1.970 | 2.354 | 3.111 | 3.528 | 4.442 | 5.169 | 6.201 | 7.431 |
| | Sensible cooling capacity | | W | 1.290 | 1.620 | 2.070 | 2.310 | 2.870 | 3.230 | 4.330 | 4.800 | 5.670 | 6.620 |
| | Heating capacity (2) * | max | W | 1.833 | 2.410 | 2.949 | 3.331 | 4.060 | 4.686 | 5.971 | 6.651 | 7.756 | 9.079 |
| | | med | W | 1.572 | 2.067 | 2.585 | 2.918 | 3.765 | 4.347 | 5.573 | 6.207 | 7.235 | 8.469 |
| | | min | W | 1.369 | 1.799 | 2.198 | 2.481 | 3.252 | 3.757 | 4.614 | 5.136 | 6.151 | 7.199 |
| | Heating capacity (3) * | max | W | 3.678 | 4.837 | 5.916 | 6.682 | 8.144 | 9.401 | 11.978 | 13.339 | 15.556 | 18.209 |
| | | med | W | 3.154 | 4.146 | 5.185 | 5.852 | 7.551 | 8.718 | 11.176 | 12.447 | 14.508 | 16.983 |
| | | min | W | 2.745 | 3.606 | 4.406 | 4.972 | 6.519 | 7.533 | 9.250 | 10.295 | 12.329 | 14.431 |
| | Pressure drops in cooling * | | kPa | 14,5 | 18,1 | 20,5 | 23,0 | 25,1 | 26,8 | 27,2 | 30,0 | 31,9 | 32,4 |
| | Pressure drops in heating (3) * | | kPa | 15,9 | 19,2 | 20,1 | 20,0 | 20,9 | 23,2 | 22,6 | 22,6 | 23,8 | 22,9 |
| | Air flow rate * | max | m³/h | 370 | 400 | 500 | 550 | 670 | 720 | 1.000 | 1.050 | 1.280 | 1.310 |
| | | med | m³/h | 285 | 308 | 400 | 440 | 590 | 634 | 890 | 935 | 1.139 | 1.166 |
| | | min | m³/h | 226 | 244 | 305 | 336 | 462 | 497 | 650 | 683 | 870 | 891 |
| | Water flow rate in cooling (*) | | l/h | 272 | 362 | 458 | 547 | 679 | 769 | 999 | 1.162 | 1.363 | 1.633 |
| | Heating water flow rate (3) (*) | | l/h | 322 | 422 | 514 | 577 | 702 | 812 | 1.032 | 1.144 | 1.333 | 1.557 |
| | Sound pressure (4) | | dB(A) | 24<br>31<br>38 | 25<br>31<br>38 | 30<br>38<br>44 | 31<br>38<br>45 | 26<br>33<br>37 | 27<br>34<br>37 | 34<br>41<br>43 | 35<br>41<br>45 | 39<br>46<br>48 | 40<br>46<br>49 |
| | Power supply | V~/Ph/Hz | | 230/1/50 | | | | | | | | | |
| | Hydraulic connections | | "G | 1/2" | | | | | | | | | |
| | Condensate drain Ø | | mm | 20 | | | | | | | | | |
| | Electric motors | | no. | 1 | | | | | | | | | |
| | Power input * | | W | 55 | | 85 | | 75 | | 145 | | 175 | |
| | Fans | | no. | 1 | | | | 2 | | | | | |
| Thermal outputs in 4-pipe version | Cooling capacity (1) (*) | | W | 1.450 | 1.940 | 2.470 | 2.920 | 3.650 | 4.110 | 5.390 | 6.230 | 7.350 | 8.810 |
| | Sensible capacity (1) (*) | | W | 1.240 | 1.570 | 2.020 | 2.220 | 2.780 | 3.110 | 4.210 | 4.640 | 5.520 | 6.440 |
| | Thermal output (2) (*) | | W | 940 | 990 | 1.590 | 1.675 | 2.190 | 2.275 | 3.145 | 3.230 | 3.995 | 4.055 |
| | Thermal output (3) (*) | | W | 1.880 | 1.980 | 3.180 | 3.350 | 4.380 | 4.550 | 6.290 | 6.460 | 7.990 | 8.110 |
| | Pressure losses (3) (*) | | kPa | 7,3 | 8,0 | 11,7 | 12,9 | 21,3 | 22,9 | 41,1 | 43,3 | 37,7 | 38,8 |
| BRUSHLESS ** | Cooling capacity (1) | range | W | 1.810-880 | 2.320-1.130 | 2.830-1.400 | 3.220-1.600 | 4.630-2.130 | 5.070-2.330 | 6.010-3.060 | 6.820-3.470 | 7.440-3.780 | 8.790-4.460 |
| | Thermal power (2) | range | W | 985-2.325 | 1.233-2.915 | 1.670-3.409 | 1.557-3.625 | 2.063-5.209 | 2.285-5.794 | 2.949-6.615 | 2.174-7.149 | 3.388-7.650 | 3.898-8.800 |
| | Heating capacity (3) | range | W | 4.680-1.970 | 5.860-2.470 | 6.840-2.940 | 7.250-3.120 | 10.510-4.130 | 11.650-4.580 | 13.280-5.900 | 14.300-6350 | 15.300-6.780 | 17.600-7.800 |
| | Hot coil (2) | W | | 1.209-510 | 1.211-515 | 1.855-800 | 1.865-805 | 2.880-1.135 | 2.883-1.140 | 3.553-1.580 | 3.561-1.590 | 4.045-1.790 | 4.045-1.795 |
| | Hot coil (3) | W | | 2.440-1.030 | 2.440-1.030 | 3.730-1.610 | 3.730-1.610 | 5.800-2.280 | 5.800-2.280 | 7.140-3.170 | 7.140-3.170 | 8.090 -3.590 | 8.090 -3.590 |
| | Airflow | m³/h | | 537-127 | | 625-153 | | 1.021-215 | | 1.184-306 | 1.184-306 | 1.255-323 | |
| | Power input (5) | W | | 9 | | 9 | | 10 | | 11 | 11 | 11 | |
| | Sound pressure (5) | dB(A) | | 23 | | 26 | | 22 | | 24 | 24 | 25 | |
| | Power supply | V~/Ph/Hz | | 230/1/50 | | | | | | | | | |
| | Signal | Vdc | | 0-10 | | | | | | | | | |
| | Motors | no. | | 1 | | | | | | | | | |
| | Fans | no. | | 1 | | | | 2 | | | | | |
| S Versions * | Sound pressure (4) | | dB(A) | 10<br>11<br>16 | 10<br>11<br>16 | 14<br>16<br>22 | 14<br>16<br>22 | 12<br>13<br>18 | 12<br>13<br>18 | 17<br>19<br>25 | 17<br>19<br>25 | 15<br>18<br>24 | 15<br>18<br>24 |
| S MB Versions * | Sound pressure (4) | | dB(A) | 10<br>17<br>30 | 10<br>18<br>31 | 10<br>22<br>34 | 10<br>22<br>36 | 11<br>21<br>30 | 12<br>22<br>31 | 11<br>26<br>35 | 12<br>28<br>36 | 10<br>27<br>39 | 10<br>28<br>40 |

Water connections on the left side
Note: Output and air flow rates are given at a static pressure of 0 Pa. For different available static pressures, refer to the air flow variation diagrams.
* For the remaining technical data, refer to the product manual.
** Data referring only to the 2-pipe version. For other versions, please refer to the product manual.
(1) Inlet air temperature: 27°C d.b. / 19.5°C w.b.
Water inlet/outlet temperature: 7°C / 12°C
(2) Inlet air temperature: 20°C d.b.
Water inlet/outlet temperature: 45°C / 40°C
(3) Inlet air temperature: 20°C d.b.
Water inlet/outlet temperature: 70°C / 60°C
(4) At a distance of 2 m and with a reverberation time of 0.5 s.
(5) With 3 VDC input signal
(*) Maximum speed

## Dimensional Drawings

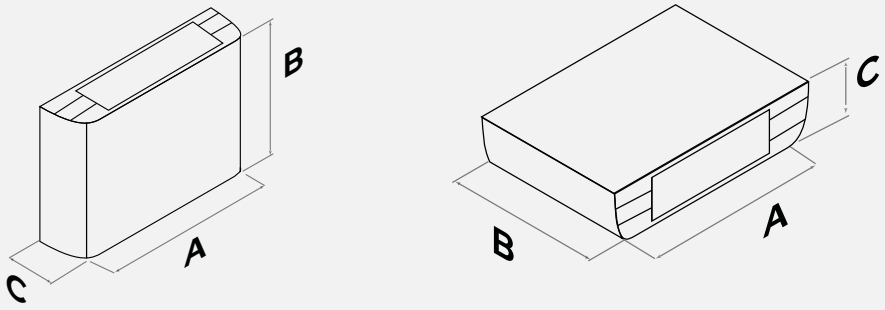


| Dimensions - With casing | | | | | | | | | | |
|---|---|---|---|---|---|---|---|---|---|---|
| **VE** | **13** | **23** | **33** | **43** | **53** | **63** | **73** | **83** | **93** | **103** |
| A* | 670 | 670 | 870 | 870 | 1.070 | 1.070 | 1.270 | 1.270 | 1.470 | 1.470 |
| B | 520 | 520 | 520 | 520 | 520 | 520 | 520 | 520 | 520 | 520 |
| C | 220 | 220 | 220 | 220 | 220 | 220 | 220 | 220 | 220 | 220 |
| Kg | 13,5 | 14 | 16,4 | 17,2 | 22,5 | 23,5 | 26 | 27,5 | 30 | 31,5 |

Dimensions in mm

# VE: VII, VIF, OIP, OII

## Ductable/built-in fan coil unit with AC or DC brushless motor

1.4 kW÷10.7 kW

- Galvanized sheet metal structure, complete with insulation.
- Complete with regenerable filter.
- Standard natural-drain condensate collection tray **(for horizontal units only)**.
- Six-speed centrifugal fans, three of which are connected in the standard configuration **(no MB).**
- Three-row heat exchange coils with copper tubes and aluminum fins featuring a hydrophilic surface treatment for rapid condensate drainage.
- The installation of valve kits is recommended for every type of system.

### S version

- Version with silenced motor, reduced capacitor.
- Thermal and acoustic insulation with reinforced anti-vibration system

### MB version

- Brushless motor
- Ventilation modulation 0–100%

### Version 4

- Version with second hydronic coil
- For 4-pipe systems
- Additional coil for heating only

### P version

- Single-phase AC squirrel-cage asynchronous electric motor
- Thermal protection TH (Klixon)
- Run capacitor always engaged
- 4 poles, IP42, Class B, double insulation, 230Vac–1Ph–50/60Hz

### Configurations

**VII**: Vertical built-in unit with bottom air return

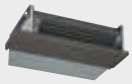

**OIP**: Horizontal recessed unit with rear return air intake

**VIF**: Vertical built-in unit with front return air intake

**OII**: Horizontal built-in unit with bottom return air intake

### Versions

#### Standard

- **VE VII**: Vertical built-in unit with bottom air return
- **VE VIF**: Vertical built-in unit with front return air intake
- **VE OIP**: Horizontal concealed units with rear return air intake
- **VE OII**: Horizontal concealed units with bottom return air intake

#### Enhanced

- **VE VII P**: Enhanced recessed vertical unit with bottom return air
- **VE VIF P**: Enhanced vertical recessed unit with front return air
- **VE OIP P**: Horizontal recessed units with rear return, enhanced
- **VE OII P**: Horizontal ducted units, enhanced lower return

#### Enhanced with Brushless Motor

- **VE VII P MB**: Vertical built-in unit with enhanced bottom return and MB
- **VE VIF P MB**: Enhanced built-in vertical unit with front return, with MB
- **VE OIP P MB**: Recessed horizontal rear return, enhanced with MB
- **VE OII P MB**: Horizontal ducted units with bottom return, enhanced with MB

#### Standard with Brushless Motor

- **VE VII MB**: Recessed vertical unit with bottom return, with MB
- **VE VIF MB**: Vertical concealed front-return unit with MB
- **VE OIP MB**: Horizontal concealed units with rear return, with MB
- **VE OII MB**: Horizontal ductable units with bottom return air and MB

#### Silenced

- **VE VII S**: Vertical built-in unit, bottom return, soundproofed
- **VE VIF S**: Vertical built-in front return, soundproofed
- **VE OIP S**: Horizontal recessed rear-return silenced units
- **VE OII S**: Horizontal ducted concealed units with bottom air return, soundproofed

#### Silenced with brushless motor

- **VE VII S MB**: Vertical built-in unit with lower return, soundproofed, with MB
- **VE VIF S MB**: Vertical built-in front-return silenced unit with MB
- **VE OIP S MB**: Horizontal built-in rear return silenced unit with MB
- **VE OII S MB**: Horizontal concealed unit, bottom return, soundproofed, with MB

Available in a 4-pipe version. Refer to the price list for the codes.
Standard VE with left-hand connection. When ordering, it is possible to request connections on the right-hand side.

# Accessories

**PA** Suction plenum with circular connections

**PM** Supply plenum with circular connections

| Size | 13/23 | 33/43 | 53/63 | 73/83 | 93/103 |
|---|---|---|---|---|---|
| No. of connections with concentric collars Ø 200/180/160 mm | 1 | 2 | 2 | 3 | 4 |

**P1** Aesthetic panel in pre-painted sheet metal complete with intake and supply grille.

**P2** Aesthetic panel in pre-painted sheet metal complete with supply and return air grille, equipped with inspection doors for access to controls.

**PMI** 90° supply air plenum

**FTI** Preparation frame in galvanized sheet metal. Suitable for creating the installation recess.

**PMP1** Condensate pump (maximum water flow rate 8 l/h at 0 m.w.c., water flow rate 6.5 l/h at 1 m.w.c., water flow rate 4 l/h at 3 m.w.c., water flow rate 0 l/h at 6 m.w.c.) equipped with an alarm contact 8A@250V (suitable for all VERTICAL versions)

**PMP2** Condensate pump (maximum water flow rate 8 l/h at 0 m.w.c., water flow rate 6.5 l/h at 1 m.w.c., water flow rate 4 l/h at 3 m.w.c., water flow rate 0 l/h at 6 m.w.c.) equipped with 8A@250V alarm contact (suitable for all HORIZONTAL versions).

**TMB** Low-temperature bimetallic thermostat: automatically stops the fan if the temperature of the water entering the radiator falls below 32°C during the heating season (winter). Compatible with CRA, CVC, CVA, CBB and CVD1.

**SND-W4** Water temperature probe (NTC type, 4700 Ohm @ 25°C) with adjustable minimum setpoint, 1 m cable length. Alternative to TMB thermostat, compatible with CBB and CVD1.

**SDI.4 X3A** 4-output relay board. Suitable for controlling up to 4 three-speed motors. For AC motors only. Maximum rating: 4 x 3 A 230 Vac.

**MOR** "Mammut"-type terminal block included when purchasing the fan coil unit complete with on-board controller. Must be ordered separately for wall-mounted controllers.

**2V2** 2-way valves for 2-pipe systems, with 230V actuator

**3V2-25-1NO** 3-way valves for 2-pipe systems, with a 230V servo-controlled actuator fitted with a limit switch.

**2V4** 2-way valves for 4-pipe system, with 230V actuator

**3V4** 3-way valves for 4-pipe systems, with 230V actuator

**TEL** System for remote-control management. Main board + air probe + water probe + IR receiver + remote control (management of 2/4-pipe systems, with/without valves). Fan: 7A–230Vac. Valves: 2A–230Vac. ("Mammut" MOR terminal block included).

**CVD1** Microprocessor-based on-machine control unit, 230Vac, with 2/4-pipe management with or without valves (MOR 'Mammut' terminal block included). Compatible with TMB.

For vertical VII/VIF and horizontal OIP/OII versions in sizes 13, 23, 33 and 43, the EC motor electronic board is mounted externally on the short side of the unit.

| VE: VII, VIF, OIP, OII | | | | 13 | 23 | 33 | 43 | 53 | 63 | 73 | 83 | 93 | 103 |
|---|---|---|---|---|---|---|---|---|---|---|---|---|---|
| Thermal outputs in 2-pipe version | Cooling capacity (1) * | max | W | 1.579 | 2.105 | 2.663 | 3.179 | 3.947 | 4.474 | 5.811 | 6.758 | 7.926 | 9.495 |
| | | med | W | 1.317 | 1.755 | 2.264 | 2.702 | 3.521 | 3.991 | 5.211 | 6.062 | 7.107 | 8.515 |
| | | min | W | 1.169 | 1.557 | 1.970 | 2.354 | 3.111 | 3.528 | 4.442 | 5.169 | 6.201 | 7.431 |
| | Sensible cooling capacity | | W | 1.290 | 1.620 | 2.070 | 2.310 | 2.870 | 3.230 | 4.330 | 4.800 | 5.670 | 6.620 |
| | Heating capacity (2) * | max | W | 1.870 | 2.455 | 2.990 | 3.355 | 4.080 | 4.720 | 6.000 | 6.650 | 7.750 | 9.050 |
| | | med | W | 1.572 | 2.067 | 2.585 | 2.918 | 3.765 | 4.347 | 5.573 | 6.207 | 7.235 | 8.469 |
| | | min | W | 1.369 | 1.799 | 2.198 | 2.481 | 3.252 | 3.757 | 4.614 | 5.136 | 6.151 | 7.199 |
| | Heating capacity (3) * | max | W | 3.740 | 4.910 | 5.980 | 6.710 | 8.160 | 9.440 | 12.000 | 13.300 | 15.500 | 18.100 |
| | | med | W | 3.154 | 4.146 | 5.185 | 5.852 | 7.551 | 8.718 | 11.176 | 12.447 | 14.508 | 16.983 |
| | | min | W | 2.745 | 3.606 | 4.406 | 4.972 | 6.519 | 7.533 | 9.250 | 10.195 | 12.329 | 14.431 |
| | Pressure drops in cooling * | | kPa | 14,5 | 18,1 | 20,5 | 23,0 | 25,1 | 26,8 | 27,2 | 30,0 | 31,9 | 32,4 |
| | Pressure drops in heating (3) * | | kPa | 15,9 | 19,2 | 20,1 | 20,0 | 20,9 | 23,2 | 22,6 | 22,6 | 23,8 | 22,9 |
| | Chilled water flow rate * | | l/h | 272 | 362 | 458 | 547 | 679 | 769 | 999 | 1.162 | 1.363 | 1.633 |
| | Heating water flow rate (3) * | | l/h | 322 | 422 | 514 | 577 | 702 | 812 | 1.032 | 1.144 | 1.333 | 1.557 |
| | Air flow rate * | max | m³/h | 370 | 400 | 500 | 550 | 670 | 720 | 1.000 | 1.050 | 1.280 | 1.310 |
| | | med | m³/h | 285 | 308 | 400 | 440 | 590 | 634 | 890 | 935 | 1.139 | 1.166 |
| | | min | m³/h | 226 | 244 | 305 | 336 | 462 | 497 | 650 | 683 | 870 | 891 |
| | Sound pressure (4) | dB(A) | | 24<br>31<br>38 | 25<br>31<br>38 | 30<br>38<br>44 | 31<br>38<br>45 | 26<br>33<br>37 | 27<br>34<br>37 | 34<br>41<br>43 | 35<br>41<br>45 | 39<br>46<br>48 | 40<br>46<br>49 |
| | Power supply | V~/Ph/Hz | | 230/1/50 | | | | | | | | | |
| | Hydraulic connections | | "G | 1/2" F | | | | | | | | | |
| | Condensate drain Ø | | mm | 20 | | | | | | | | | |
| | Electric motors | | no. | 1 | | | | | | | | | |
| | Power input * | | W | 55 | | 85 | | 75 | | 145 | | 175 | |
| | Fans | | no. | 1 | | | | 2 | | | | | |
| | Maximum available static pressure (7) | | Pa | 60 | | | | | | | | | |
| Thermal outputs in 4-pipe version | Cooling capacity (1) * | | W | 1.450 | 1.940 | 2.470 | 2.920 | 3.650 | 4.110 | 5.390 | 6.230 | 7.350 | 8.810 |
| | Sensible capacity (1) * | | W | 1.240 | 1.570 | 2.020 | 2.220 | 2.780 | 3.110 | 4.210 | 4.640 | 5.520 | 6.440 |
| | Thermal output (2) * | | W | 940 | 990 | 1.590 | 1.675 | 2.190 | 2.275 | 3.145 | 3.230 | 3.995 | 4.055 |
| | Thermal power (3) * | | W | 1.880 | 1.980 | 3.180 | 3.350 | 4.380 | 4.550 | 6.290 | 6.460 | 7.990 | 8.110 |
| | Pressure drops (3) * | | kPa | 7,3 | 8,0 | 11,7 | 12,9 | 21,3 | 22,9 | 41,1 | 43,3 | 37,7 | 38,8 |
| Thermal outputs in brushless version ** | Cooling capacity (1) | range | W | 1.810 | 2.320 | 2.830 | 3.220 | 4.630 | 5.070 | 6.010 | 6.820 | 7.440 | 8.790 |
| | Thermal power (2) | range | W | 985 | 1.233 | 1.670 | 1.557 | 2.063 | 2.285 | 2.949 | 2.174 | 3.388 | 3.898 |
| | Heating capacity (3) | range | W | 4.680 | 5.860 | 6.840 | 7.250 | 10.510 | 11.650 | 13.280 | 14.300 | 15.300 | 17.600 |
| | Airflow | m³/h | | 537 | 536 | 625 | 627 | 1.018 | 1.022 | 1.180 | 1.187 | 1.255 | 1.255 |
| | Power input (5) | W | | 9 | 9 | 9 | 9 | 10 | 10 | 11 | 11 | 11 | 11 |
| | Sound pressure (5) | dB(A) | | 23 | 23 | 26 | 26 | 22 | 22 | 24 | 24 | 25 | 25 |
| | Power supply | V~/Ph/Hz | | 230/1/50 | | | | | | | | | |
| | Signal | Vdc | | 0-10 | | | | | | | | | |
| | Motors | no. | | 1 | | | | | | | | | |
| | Fans | no. | | 1 | | | | 2 | | | | | |
| | Maximum available static pressure (7) | Pa | | 70 | | | | | | | | | |
| Thermal outputs in 4-pipe brushless version | Hot coil (2) | W | | 895 | 938 | 1.479 | 1.556 | 2.087 | 2.163 | 2.959 | 3.057 | 3.633 | 3.687 |
| | Hot coil (3)(6) | W | | 1.800 | 1.880 | 2.960 | 3.120 | 4.180 | 4.330 | 5.920 | 6.120 | 7.270 | 7.370 |

Water connections on the left side
* For the remaining technical data, refer to the product manual.
** Data referring only to the 2-pipe version. For other versions, please refer to the product manual.
(1) Inlet air temperature: 27°C d.b. / 19.5°C w.b.
Water inlet/outlet temperature: 7°C / 12°C
(2) Inlet air temperature: 20°C d.b.
Water inlet/outlet temperature: 45°C / 40°C
(3) Inlet air temperature: 20°C d.b.
Water inlet/outlet temperature: 70°C / 60°C
(4) At a distance of 2 m and with a reverberation time of 0.5 s.
(5) Rated nameplate electrical power input
(6) Version 4
(7) For performance data, refer to the product technical manual.

**Performances and airflows are specified at a pressure head of 0 Pa.**
**For different available pressure values, refer to the product technical brochure by scanning the QR Code.**
**(7) For performance data, refer to the product technical manual.**

| FAN COIL UNITS: VII, VIF, OIP, OII P version | | | | 13 | 23 | 33 | 43 | 53 | 63 | 73 | 83 | 93 | 103 |
|---|---|---|---|---|---|---|---|---|---|---|---|---|---|
| Heating capacities in enhanced 2-pipe version | Cooling capacity (1) * | max | W | 1.683 | 2.296 | 2.899 | 3.255 | 4.163 | 4.701 | 6.164 | 7.150 | 8.568 | 10.337 |
| | | med | W | 1.577 | 2.141 | 2.812 | 3.242 | 3.851 | 4.357 | 5.848 | 6.800 | 8.082 | 9.770 |
| | | min | W | 1.387 | 1.879 | 2.650 | 3.062 | 3.345 | 3.807 | 5.075 | 5.910 | 7.060 | 8.499 |
| | Sensible cooling capacity | | W | 1.380 | 1.790 | 2.270 | 2.450 | 3.050 | 3.420 | 4.630 | 5.120 | 6.200 | 7.300 |
| | Heating capacity (2) * | max | W | 2.000 | 2.692 | 3.260 | 3.553 | 4.317 | 4.976 | 6.389 | 7.061 | 8.415 | 9.895 |
| | | med | W | 1.852 | 2.477 | 3.157 | 3.410 | 3.936 | 4.545 | 6.000 | 6.651 | 7.849 | 9.253 |
| | | min | W | 1.592 | 2.124 | 2.942 | 3.187 | 3.335 | 3.878 | 5.078 | 5.637 | 6.693 | 7.851 |
| | Heating capacity (3) * | max | W | 4.000 | 5.380 | 6.510 | 7.100 | 8.630 | 9.950 | 12.760 | 14.120 | 16.830 | 19.790 |
| | | med | W | 3.704 | 4.954 | 6.313 | 6.821 | 7.872 | 9.090 | 12.000 | 13.300 | 15.700 | 18.506 |
| | | min | W | 3.184 | 4.249 | 5.885 | 6.374 | 6.671 | 7.757 | 10.156 | 11.276 | 13.388 | 15.704 |
| | Pressure drops in cooling * | | kPa | 14.7 | 19.4 | 21.6 | 23.0 | 25.1 | 26.5 | 27.5 | 30.3 | 33.7 | 34.6 |
| | Pressure drops in heating (3) * | | kPa | 18.1 | 23.0 | 23.8 | 22.3 | 23.4 | 25.8 | 25.6 | 25.6 | 28.0 | 27.4 |
| | Chilled water flow rate * | | l/h | 273 | 375 | 471 | 547 | 679 | 767 | 1.006 | 1.168 | 1.400 | 1.689 |
| | Heating water flow rate (3) * | | l/h | 344 | 463 | 560 | 611 | 742 | 856 | 1.098 | 1.214 | 1.447 | 1.702 |
| | Air flow rate * | max | m³/h | 410 | 460 | 570 | 600 | 730 | 780 | 1.100 | 1.150 | 1.450 | 1.500 |
| | | med | m³/h | 360 | 400 | 540 | 560 | 625 | 670 | 990 | 1.040 | 1.290 | 1.340 |
| | | min | m³/h | 280 | 310 | 480 | 500 | 475 | 515 | 750 | 790 | 990 | 1.020 |
| | Sound pressure (4) | | dB(A) | 29<br>36<br>39 | 30<br>38<br>42 | 41<br>44<br>45 | 42<br>45<br>47 | 25<br>32<br>37 | 27<br>34<br>39 | 37<br>43<br>47 | 38<br>44<br>48 | 43<br>44<br>51 | 44<br>49<br>52 |
| | Power supply | | V~/Ph/Hz | 230/1/50 | | | | | | | | | |
| | Hydraulic connections | | "G | 1/2" F | | | | | | | | | |
| | Condensate drain Ø | | mm | 20 | | | | | | | | | |
| | Electric motors | | no. | 1 | | | | | | | | | |
| | Power input * | | W | 55 | | 125 | | 115 | | 195 | | 230 | |
| | Fans | | no. | 1 | | | | 2 | | | | | |
| | Maximum available static pressure (7) | | Pa | 87 | 87 | 105 | 105 | 100 | 100 | 103 | 103 | 115 | 115 |
| Heating capacities in enhanced 4-pipe version | Cooling capacity (1) * | | W | 1.550 | 2.120 | 2.680 | 3.150 | 3.890 | 4.330 | 5.710 | 6.640 | 7.970 | 9.620 |
| | Sensible capacity (1) * | | W | 1.330 | 1.740 | 2.220 | 2.430 | 2.990 | 3.300 | 4.500 | 4.990 | 6.050 | 7.130 |
| | Thermal output (2) * | | W | 1.009 | 1.090 | 1.739 | 1.820 | 2.345 | 2.405 | 3.347 | 3.460 | 4.350 | 4.450 |
| | Thermal power (3) * | | W | 2.010 | 2.180 | 3.470 | 3.640 | 4.690 | 4.810 | 6.690 | 6.910 | 8.700 | 8.900 |
| | Pressure drops (3) * | | kPa | 8,3 | 9,7 | 13,9 | 15,3 | 24,4 | 25,6 | 46,5 | 49,6 | 44,7 | 46,8 |
| Thermal outputs in enhanced brushless version ** | Cooling capacity (1) | range | W | 1.670 | 2.220 | 2.830 | 3.280 | 4.310 | 4.880 | 6.010 | 6.970 | 8.470 | 10.210 |
| | Thermal power (2) | range | W | 2.096 | 2.749 | 3.372 | 3.679 | 4.736 | 5.468 | 6.579 | 7.262 | 8.793 | 10.325 |
| | Heating capacity (3) | range | W | 4.190 | 5.490 | 6.740 | 7.330 | 9.470 | 10.930 | 13.150 | 14.520 | 17.580 | 20.640 |
| | Airflow | | m³/h | 440 | 475 | 600 | 630 | 840 | 900 | 1.150 | 1.200 | 1.550 | 1.600 |
| | Power input (5) | | W | 55 | 55 | 65 | 65 | 85 | 85 | 90 | 90 | 180 | 180 |
| | Sound pressure (5) | | dB(A) | 13<br>29<br>40 | 13<br>30<br>43 | 16<br>33<br>47 | 16<br>35<br>48 | 16<br>29<br>42 | 16<br>31<br>44 | 17<br>36<br>48 | 17<br>37<br>49 | 20<br>43<br>52 | 20<br>44<br>53 |
| | Power supply | | V~/Ph/Hz | 230/1/50 | | | | | | | | | |
| | Signal | | Vdc | 0-10 | | | | | | | | | |
| | Motors | | no. | 1 | | | | | | | | | |
| | Fans | | no. | 1 | | | | 2 | | | | | |
| | Maximum available static pressure (7) | | Pa | 103 | 103 | 111 | 112 | 120 | 120 | 137 | 138 | 174 | 175 |
| Heating capacities in enhanced 4-pipe brushless version | Hot coil (2) | | W | 1.052 | 1.107 | 1.822 | 1.861 | 2.573 | 2.635 | 3.440 | 3.542 | 4.552 | 4.689 |
| | Hot coil (3)(6) | | W | 2.100 | 2.210 | 3.640 | 3.720 | 5.070 | 5.270 | 6.880 | 7.080 | 9.100 | 9.370 |

Water connections on the left side
* For the remaining technical data, refer to the product manual.
** Data refers only to the 2-pipe unit in the silenced version. For other versions, refer to the product manual.
(1) Inlet air temperature: 27°C d.b. / 19.5°C w.b.
Water inlet/outlet temperature: 7°C / 12°C
(2) Inlet air temperature: 20°C d.b.
Water inlet/outlet temperature: 45°C / 40°C
(3) Inlet air temperature: 20°C d.b.
Water inlet/outlet temperature: 70°C / 60°C
(4) At a distance of 2 m and with a reverberation time of 0.5 s.
(5) Rated nameplate electrical power input
(6) Version 4
(7) For performance data, refer to the product technical manual.

**Performances and airflows are specified at a pressure head of 0 Pa.**
**For different available pressure values, refer to the product technical brochure by scanning the QR Code.**
**(7) For performance data, refer to the product technical manual.**

| VE: VII, VIF, OIP, OII S version | | | | 13 | 23 | 33 | 43 | 53 | 63 | 73 | 83 | 93 | 103 |
|---|---|---|---|---|---|---|---|---|---|---|---|---|---|
| Thermal outputs in 2-pipe silenced version | Cooling capacity (1) * | max | W | 1.030 | 1.390 | 1.810 | 2.160 | 2.690 | 3.050 | 3.900 | 4.590 | 4.860 | 5.960 |
| | | med | W | 932 | 1.276 | 1.653 | 1.965 | 2.514 | 2.880 | 3.641 | 4.277 | 4.453 | 5.460 |
| | | min | W | 831 | 1.154 | 1.532 | 1.834 | 2.386 | 2.747 | 3.427 | 4.042 | 4.156 | 5.118 |
| | Sensible cooling capacity | | W | 840 | 1.060 | 1.410 | 1.570 | 1.950 | 2.200 | 2.900 | 3.260 | 3.420 | 4.100 |
| | Heating capacity (2) * | max | W | 1.247 | 1.656 | 2.088 | 2.348 | 2.856 | 3.309 | 4.143 | 4.649 | 4.858 | 5.818 |
| | | med | W | 1.050 | 1.419 | 1.770 | 1.977 | 2.490 | 2.917 | 3.597 | 4.029 | 4.129 | 4.942 |
| | | min | W | 917 | 1.262 | 1.620 | 1.823 | 2.342 | 2.759 | 3.350 | 3.770 | 3.808 | 4.582 |
| | Heating capacity (3) * | max | W | 2.500 | 3.320 | 4.180 | 4.700 | 5.720 | 6.620 | 8.290 | 9.300 | 9.720 | 11.640 |
| | | med | W | 2.099 | 2.839 | 3.541 | 3.954 | 4.981 | 5.834 | 7.195 | 8.059 | 8.259 | 9.885 |
| | | min | W | 1.834 | 2.524 | 3.240 | 3.647 | 4.685 | 5.519 | 6.701 | 7.542 | 7.617 | 9.164 |
| | Pressure drops in cooling * | | kPa | 6,2 | 7,9 | 9,4 | 10,6 | 11,6 | 12,4 | 12,2 | 13,8 | 12,0 | 12,7 |
| | Pressure drops in heating (3) * | | kPa | 7,1 | 8,7 | 9,8 | 9,8 | 10,3 | 11,4 | 10,8 | 11,1 | 9,4 | 9,5 |
| | Chilled water flow rate * | | l/h | 177 | 239 | 311 | 372 | 463 | 525 | 671 | 789 | 836 | 1.025 |
| | Heating water flow rate (3) * | | l/h | 215 | 286 | 359 | 404 | 492 | 569 | 713 | 800 | 836 | 1.001 |
| | Air flow rate * | max | m³/h | 200 | 220 | 290 | 320 | 390 | 420 | 570 | 610 | 630 | 670 |
| | | med | m³/h | 150 | 170 | 220 | 240 | 310 | 340 | 450 | 480 | 480 | 510 |
| | | min | m³/h | 120 | 140 | 190 | 210 | 280 | 310 | 400 | 430 | 420 | 450 |
| | Sound pressure (4) | | dB(A) | 10<br>11<br>16 | 10<br>11<br>16 | 14<br>16<br>22 | 14<br>16<br>22 | 12<br>13<br>18 | 12<br>13<br>18 | 17<br>19<br>25 | 17<br>19<br>25 | 15<br>18<br>24 | 15<br>18<br>24 |
| | Power supply | V~/Ph/Hz | | 230/1/50 | | | | | | | | | |
| | Hydraulic connections | | "G | 1/2" F | | | | | | | | | |
| | Condensate drain Ø | | mm | 20 | 20 | 20 | 20 | 20 | 20 | 20 | 20 | 20 | 20 |
| | Electric motors | | no. | 1 | 1 | 1 | 1 | 1 | 1 | 1 | 1 | 1 | 1 |
| | Power input * | | W | 55 | | 80 | | | | 145 | | 180 | |
| | Fans | | no. | 1 | | | | 2 | | | | | |
| | Maximum available static pressure (7) | | Pa | 60 | | | | 63 | | 75 | | 78 | |
| Heating/ cooling capacities in 4-pipe silenced version | Cooling capacity (1) * | | W | 1.000 | 1.350 | 1.760 | 2.080 | 2.600 | 2.960 | 3.820 | 4.450 | 4.760 | 5.790 |
| | Sensible capacity (1) * | | W | 810 | 1.030 | 1.380 | 1.500 | 1.880 | 2.130 | 2.830 | 3.150 | 3.350 | 3.970 |
| | Thermal output (2) * | | W | 628 | 670 | 1.115 | 1.166 | 1.526 | 1.604 | 2.179 | 2.256 | 2.517 | 2.595 |
| | Thermal power (3) * | | W | 1.260 | 1.340 | 2.230 | 2.340 | 3.060 | 3.210 | 4.360 | 4.520 | 5.040 | 5.190 |
| | Pressure drops (3) * | | kPa | 3,3 | 3,7 | 5,7 | 6,3 | 10,4 | 11,4 | 19,7 | 21,1 | 15,0 | 15,9 |
| Heating capacities in silenced brushless version ** | Cooling capacity (1) | range | W | 1.430 | 1.910 | 2.380 | 2.820 | 3.600 | 4.070 | 5.230 | 6.070 | 6.860 | 8.240 |
| | Thermal power (2) | range | W | 1.769 | 2.332 | 2.798 | 3.109 | 3.897 | 4.501 | 5.659 | 6.269 | 7.014 | 8.210 |
| | Heating capacity (3) | range | W | 3.540 | 4.670 | 5.580 | 6.220 | 7.800 | 9.010 | 11.320 | 12.540 | 14.030 | 16.430 |
| | Airflow | m³/h | | 340 | 370 | 450 | 490 | 625 | 670 | 915 | 960 | 1.100 | 1.130 |
| | Input power (5) | W | | 55 | 55 | 65 | 65 | 85 | 85 | 90 | 90 | 90 | 90 |
| | Sound pressure (5) | dB(A) | | 10<br>17<br>30 | 10<br>18<br>31 | 10<br>22<br>34 | 10<br>22<br>36 | 11<br>21<br>30 | 12<br>22<br>31 | 11<br>26<br>35 | 12<br>28<br>36 | 10<br>27<br>39 | 10<br>28<br>40 |
| | Power supply | V~/Ph/Hz | | 230/1/50 | | | | | | | | | |
| | Signal | Vdc | | 0-10 | | | | | | | | | |
| | Motors | no. | | 1 | | | | | | | | | |
| | Fans | no. | | 1 | | | | 2 | | | | | |
| | Maximum available static pressure (7) | | Pa | 72 | 72 | 79 | 80 | 85 | 85 | 86 | 86 | 73 | 83 |
| Thermal capacities in soundproofed brushless 4-pipe version | Hot coil (2) | W | | 895 | 938 | 1.479 | 1.556 | 2.087 | 2.163 | 2.959 | 3.057 | 3.633 | 3.687 |
| | Hot coil (3)(6) | W | | 1.800 | 1.880 | 2.960 | 3.120 | 4.180 | 4.330 | 5.920 | 6.120 | 7.270 | 7.370 |

Water connections on the left side
* For the remaining technical data, refer to the product manual.
** Data refers only to the 2-pipe unit in the silenced version. For other versions, refer to the product manual.
(1) Inlet air temperature: 27°C d.b. / 19.5°C w.b.
Water inlet/outlet temperature: 7°C / 12°C
(2) Inlet air temperature: 20°C d.b.
Water inlet/outlet temperature: 45°C / 40°C
(3) Inlet air temperature: 20°C d.b.
Water inlet/outlet temperature: 70°C / 60°C
(4) At a distance of 2 m and with a reverberation time of 0.5 s.
(5) Rated nameplate electrical power input
(6) Version 4
(7) For performance data, refer to the product technical manual.

**Performances and airflows are specified at a pressure head of 0 Pa.**
**For different available pressure values, refer to the product technical brochure by scanning the QR Code.**
**(7) For performance data, refer to the product technical manual.**

# Dimensional Drawings

## VII, VIF

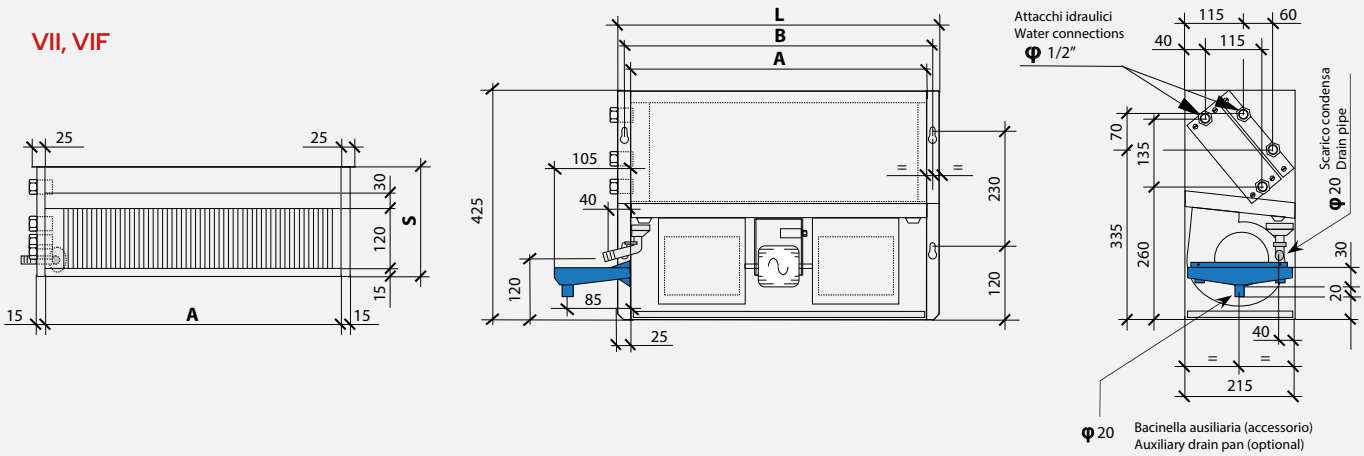


| Dimensions of vertical versions | | | | | | | | | | | |
|---|---|---|---|---|---|---|---|---|---|---|---|
| VE | | 13 | 23 | 33 | 43 | 53 | 63 | 73 | 83 | 93 | 103 |
| A | mm | 400 | 400 | 600 | 600 | 800 | 800 | 1.000 | 1.000 | 1.200 | 1.200 |
| B | mm | 425 | 425 | 625 | 625 | 825 | 825 | 1.025 | 1.025 | 1.225 | 1.225 |
| L | mm | 450 | 450 | 650 | 650 | 850 | 850 | 1.050 | 1.050 | 1.250 | 1.250 |

## OII, OIP

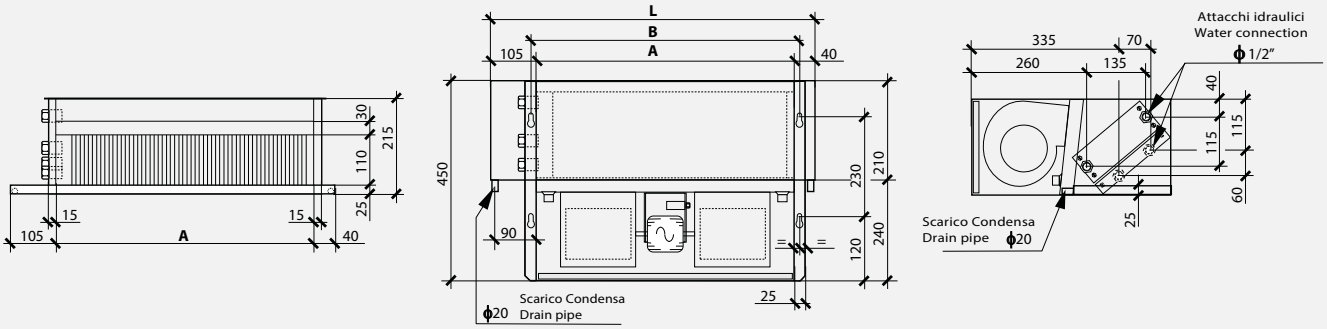


| Dimensions of horizontal versions | | | | | | | | | | | |
|---|---|---|---|---|---|---|---|---|---|---|---|
| VE | | 13 | 23 | 33 | 43 | 53 | 63 | 73 | 83 | 93 | 103 |
| A | mm | 400 | 400 | 600 | 600 | 800 | 800 | 1.000 | 1.000 | 1.200 | 1.200 |
| B | mm | 425 | 425 | 625 | 625 | 825 | 825 | 1.025 | 1.025 | 1.225 | 1.225 |
| L | mm | 545 | 545 | 745 | 745 | 945 | 945 | 1.145 | 1.145 | 1.345 | 1.345 |

## FTI

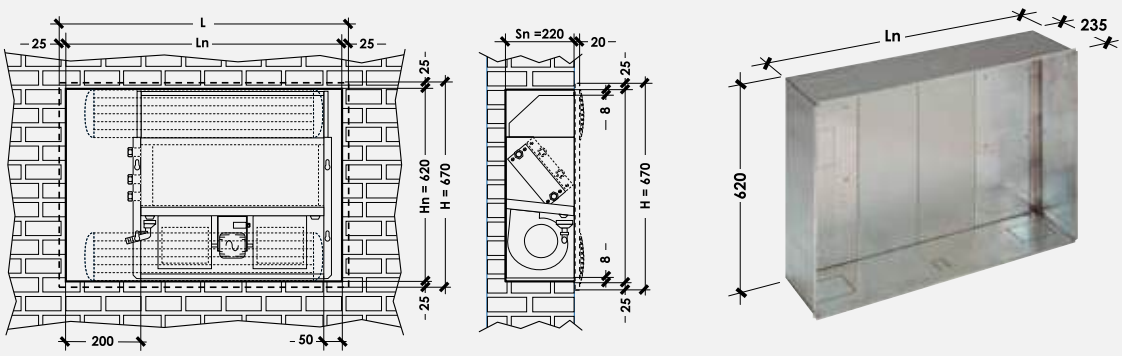

| | | 13/23 | 33/43 | 53/63 | 73/83 | 93/103 |
|---|---|---|---|---|---|---|
| Line | mm | 650 | 850 | 1.050 | 1.250 | 1.450 |
| L | mm | 700 | 900 | 1.100 | 1.300 | 1.500 |

# Price list

## VMI: Vertical unit with cabinet and bottom return air intake

| | VE VMI - Vertical with bottom return air | | VE VMI S - Vertical unit with bottom return, soundproofed | | VE VMI 4 - Vertical, bottom return, 4-pipe | | VE VMI 4/S – Vertical, bottom silenced return, 4-pipe | |
|---|---|---|---|---|---|---|---|---|
| **Size** | **Code** | **€** | **Code** | **€** | **Code** | **€** | **Code** | **€** |
| **13** | 011413#0000130300 | 451 | 011413#0020130300 | 538 | 011413#2200130300 | 620 | 011413#2220130300 | 664 |
| **23** | 011413#0000230300 | 476 | 011413#0020230300 | 565 | 011413#2200230300 | 648 | 011413#2220230300 | 692 |
| **33** | 011413#0000330300 | 496 | 011413#0020330300 | 596 | 011413#2200330300 | 688 | 011413#2220330300 | 742 |
| **43** | 011413#0000430300 | 549 | 011413#0020430300 | 655 | 011413#2200430300 | 746 | 011413#2220430300 | 799 |
| **53** | 011413#0000530300 | 597 | 011413#0020530300 | 717 | 011413#2200530300 | 823 | 011413#2220530300 | 886 |
| **63** | 011413#0000630300 | 667 | 011413#0020630300 | 794 | 011413#2200630300 | 900 | 011413#2220630300 | 962 |
| **73** | 011413#0000730300 | 755 | 011413#0020730300 | 900 | 011413#2200730300 | 1017 | 011413#2220730300 | 1.089 |
| **83** | 011413#0000830300 | 821 | 011413#0020830300 | 792 | 011413#2200830300 | 1.089 | 011413#2220830300 | 1.161 |
| **93** | 011413#0000930300 | 887 | 011413#0020930300 | 1.051 | 011413#2200930300 | 1.199 | 011413#2220930300 | 1.280 |
| **103** | 011413#0001030300 | 952 | 011413#0021030300 | 1.120 | 011413#2201030300 | 1.268 | 011413#2221030300 | 1.349 |

| | VE VMI MB - Vertical, bottom return, brushless | | VE VMI MB S - Vertical, bottom return, silenced, brushless | | VE VMI MB 4 - Vertical, bottom air return, 4-pipe brushless | | VE VMI MB 4/S - Vertical low-noise bottom return 4-pipe brushless | |
|---|---|---|---|---|---|---|---|---|
| **Size** | **Code** | **€** | **Code** | **€** | **Code** | **€** | **Code** | **€** |
| **13** | 011413#1100130300 | 642 | 011413#1120130300 | 725 | 011413#3000130300 | 812 | 011413#3020130300 | 853 |
| **23** | 011413#1100230300 | 660 | 011413#1120230300 | 754 | 011413#3000230300 | 840 | 011413#3020230300 | 880 |
| **33** | 011413#1100330300 | 684 | 011413#1120330300 | 783 | 011413#3000330300 | 880 | 011413#3020330300 | 928 |
| **43** | 011413#1100430300 | 735 | 011413#1120430300 | 840 | 011413#3000430300 | 937 | 011413#3020430300 | 985 |
| **53** | 011413#1100530300 | 778 | 011413#1120530300 | 904 | 011413#3000530300 | 1015 | 011413#3020530300 | 1.072 |
| **63** | 011413#1100630300 | 853 | 011413#1120630300 | 982 | 011413#3000630300 | 1.092 | 011413#3020630300 | 1.149 |
| **73** | 011413#1100730300 | 939 | 011413#1120730300 | 1.086 | 011413#3000730300 | 1.209 | 011413#3020730300 | 1.275 |
| **83** | 011413#1100830300 | 1003 | 011413#1120830300 | 1.158 | 011413#3000830300 | 1.281 | 011413#3020830300 | 1.347 |
| **93** | 011413#1100930300 | 1.077 | 011413#1120930300 | 1.239 | 011413#3000930300 | 1.392 | 011413#3020930300 | 1.467 |
| **103** | 011413#1101030300 | 1.144 | 011413#1121030300 | 1.307 | 011413#3001030300 | 1.461 | 011413#3021030300 | 1.537 |

* Available with right-hand connection

## VMF: Vertical unit with cabinet, front return air

| | VE VMF - Vertical front return air | | VE VMF S - Vertical, front return, soundproofed | | VE VMF 4 - Vertical unit with front return, 4-pipe system | | VE VMF 4/S - Vertical front intake, soundproofed, 4-pipe system | |
|---|---|---|---|---|---|---|---|---|
| **Size** | **Code** | **€** | **Code** | **€** | **Code** | **€** | **Code** | **€** |
| **13** | 011413#0100130300 | 477 | 011413#0120130300 | 568 | 011413#2300130300 | 650 | 011413#2320130300 | 694 |
| **23** | 011413#0100230300 | 501 | 011413#0120230300 | 593 | 011413#2300230300 | 677 | 011413#2320230300 | 721 |
| **33** | 011413#0100330300 | 530 | 011413#0120330300 | 634 | 011413#2300330300 | 725 | 011413#2320330300 | 780 |
| **43** | 011413#0100430300 | 582 | 011413#0120430300 | 691 | 011413#2300430300 | 782 | 011413#2320430300 | 835 |
| **53** | 011413#0100530300 | 639 | 011413#0120530300 | 761 | 011413#2300530300 | 867 | 011413#2320530300 | 929 |
| **63** | 011413#0100630300 | 712 | 011413#0120630300 | 838 | 011413#2300630300 | 943 | 011413#2320630300 | 1006 |
| **73** | 011413#0100730300 | 801 | 011413#0120730300 | 951 | 011413#2300730300 | 1.068 | 011413#2320730300 | 1.140 |
| **83** | 011413#0100830300 | 867 | 011413#0120830300 | 1023 | 011413#2300830300 | 1.140 | 011413#2320830300 | 1.212 |
| **93** | 011413#0100930300 | 940 | 011413#0120930300 | 1.110 | 011413#2300930300 | 1.259 | 011413#2320930300 | 1.339 |
| **103** | 011413#0101030300 | 1004 | 011413#0121030300 | 1.179 | 011413#2301030300 | 1.328 | 011413#2321030300 | 1.408 |

| | VE VMF MB - Vertical, front return, brushless | | VE VMF MB S - Vertical, front air return, soundproofed, brushless | | VE VMF MB 4 - Vertical, front return, 4-pipe, brushless | | VE VMF MB 4/S - Vertical front intake, soundproofed, 4-pipe brushless | |
|---|---|---|---|---|---|---|---|---|
| **Size** | **Code** | **€** | **Code** | **€** | **Code** | **€** | **Code** | **€** |
| **13** | 011413#1200130300 | 660 | 011413#1220130300 | 755 | 011413#3100130300 | 842 | 011413#3120130300 | 882 |
| **23** | 011413#1200230300 | 686 | 011413#1220230300 | 782 | 011413#3100230300 | 868 | 011413#3120230300 | 907 |
| **33** | 011413#1200330300 | 717 | 011413#1220330300 | 821 | 011413#3100330300 | 918 | 011413#3120330300 | 966 |
| **43** | 011413#1200430300 | 773 | 011413#1220430300 | 877 | 011413#3100430300 | 973 | 011413#3120430300 | 1021 |
| **53** | 011413#1200530300 | 825 | 011413#1220530300 | 949 | 011413#3100530300 | 1.059 | 011413#3120530300 | 1.117 |
| **63** | 011413#1200630300 | 903 | 011413#1220630300 | 1027 | 011413#3100630300 | 1.137 | 011413#3120630300 | 1.194 |
| **73** | 011413#1200730300 | 979 | 011413#1220730300 | 1.137 | 011413#3100730300 | 1.260 | 011413#3120730300 | 1.326 |
| **83** | 011413#1200830300 | 1.045 | 011413#1220830300 | 1.209 | 011413#3100830300 | 1.332 | 011413#3120830300 | 1.398 |
| **93** | 011413#1200930300 | 1.128 | 011413#1220930300 | 1.298 | 011413#3100930300 | 1.451 | 011413#3120930300 | 1.526 |
| **103** | 011413#1201030300 | 1.195 | 011413#1221030300 | 1.367 | 011413#3101030300 | 1.519 | 011413#3121030300 | 1.595 |

* Available with right-hand connection

## OMP: Horizontal with rear return cabinet

| | VE OMP - Horizontal rear return | | VE OMP S - Horizontal rear intake, silenced | | VE OMP 4 – Horizontal rear return, 4-pipe | | VE OMP 4/S – Horizontal, rear return, silenced, 4-pipe | |
|---|---|---|---|---|---|---|---|---|
| **Size** | **Code** | **€** | **Code** | **€** | **Code** | **€** | **Code** | **€** |
| **13** | 011413#0200130300 | 480 | 011413#0220130300 | 571 | 011413#2400130300 | 653 | 011413#2420130300 | 697 |
| **23** | 011413#0200230300 | 505 | 011413#0220230300 | 598 | 011413#2400230300 | 681 | 011413#2420230300 | 725 |
| **33** | 011413#0200330300 | 528 | 011413#0220330300 | 632 | 011413#2400330300 | 724 | 011413#2420330300 | 778 |
| **43** | 011413#0200430300 | 579 | 011413#0220430300 | 689 | 011413#2400430300 | 780 | 011413#2420430300 | 834 |
| **53** | 011413#0200530300 | 629 | 011413#0220530300 | 754 | 011413#2400530300 | 859 | 011413#2420530300 | 922 |
| **63** | 011413#0200630300 | 701 | 011413#0220630300 | 830 | 011413#2400630300 | 936 | 011413#2420630300 | 999 |
| **73** | 011413#0200730300 | 790 | 011413#0220730300 | 937 | 011413#2400730300 | 1.054 | 011413#2420730300 | 1.127 |
| **83** | 011413#0200830300 | 856 | 011413#0220830300 | 1009 | 011413#2400830300 | 1.127 | 011413#2420830300 | 1.199 |
| **93** | 011413#0200930300 | 924 | 011413#0220930300 | 1.092 | 011413#2400930300 | 1.241 | 011413#2420930300 | 1.320 |
| **103** | 011413#0201030300 | 987 | 011413#0221030300 | 1.160 | 011413#2401030300 | 1.307 | 011413#2421030300 | 1.388 |

| | VE OMP MB - Horizontal rear return brushless | | VE OMP MB S – Horizontal rear intake silenced brushless | | VE OMP MB 4 - Horizontal rear return, 4-pipe brushless | | VE OMP MB 4/S - Horizontal rear return, soundproofed, 4-pipe brushless | |
|---|---|---|---|---|---|---|---|---|
| **Size** | **Code** | **€** | **Code** | **€** | **Code** | **€** | **Code** | **€** |
| **13** | 011413#1300130300 | 658 | 011413#1320130300 | 758 | 011413#3200130300 | 845 | 011413#3220130300 | 886 |
| **23** | 011413#1300230300 | 682 | 011413#1320230300 | 787 | 011413#3200230300 | 873 | 011413#3220230300 | 913 |
| **33** | 011413#1300330300 | 706 | 011413#1320330300 | 820 | 011413#3200330300 | 916 | 011413#3220330300 | 964 |
| **43** | 011413#1300430300 | 757 | 011413#1320430300 | 874 | 011413#3200430300 | 972 | 011413#3220430300 | 1020 |
| **53** | 011413#1300530300 | 808 | 011413#1320530300 | 940 | 011413#3200530300 | 1.051 | 011413#3220530300 | 1.108 |
| **63** | 011413#1300630300 | 886 | 011413#1320630300 | 1018 | 011413#3200630300 | 1.128 | 011413#3220630300 | 1.186 |
| **73** | 011413#1300730300 | 970 | 011413#1320730300 | 1.123 | 011413#3200730300 | 1.247 | 011413#3220730300 | 1.313 |
| **83** | 011413#1300830300 | 1.037 | 011413#1320830300 | 1.196 | 011413#3200830300 | 1.319 | 011413#3220830300 | 1.385 |
| **93** | 011413#1300930300 | 1.112 | 011413#1320930300 | 1.280 | 011413#3200930300 | 1.433 | 011413#3220930300 | 1.508 |
| **103** | 011413#1301030300 | 1.178 | 011413#1321030300 | 1.347 | 011413#3201030300 | 1.500 | 011413#3221030300 | 1.576 |

* Available with right-hand connection

## OMI: Horizontal unit with bottom return cabinet

| | VE OMI - Horizontal, bottom return | | VE OMI S - Horizontal bottom silenced return | | VE OMI 4 - Horizontal bottom return, 4 pipes | | VE OMI 4/S - Horizontal, bottom return, soundproofed, 4-pipe | |
|---|---|---|---|---|---|---|---|---|
| **Size** | **Code** | **€** | **Code** | **€** | **Code** | **€** | **Code** | **€** |
| **13** | 011413#0300130300 | 505 | 011413#0320130300 | 598 | 011413#2500130300 | 681 | 011413#2520130300 | 725 |
| **23** | 011413#0300230300 | 531 | 011413#0320230300 | 626 | 011413#2500230300 | 710 | 011413#2520230300 | 754 |
| **33** | 011413#0300330300 | 561 | 011413#0320330300 | 670 | 011413#2500330300 | 760 | 011413#2520330300 | 815 |
| **43** | 011413#0300430300 | 612 | 011413#0320430300 | 724 | 011413#2500430300 | 815 | 011413#2520430300 | 868 |
| **53** | 011413#0300530300 | 671 | 011413#0320530300 | 797 | 011413#2500530300 | 903 | 011413#2520530300 | 966 |
| **63** | 011413#0300630300 | 743 | 011413#0320630300 | 874 | 011413#2500630300 | 981 | 011413#2520630300 | 1.042 |
| **73** | 011413#0300730300 | 835 | 011413#0320730300 | 988 | 011413#2500730300 | 1.105 | 011413#2520730300 | 1.178 |
| **83** | 011413#0300830300 | 903 | 011413#0320830300 | 1.063 | 011413#2500830300 | 1.179 | 011413#2520830300 | 1.251 |
| **93** | 011413#0300930300 | 976 | 011413#0320930300 | 1.149 | 011413#2500930300 | 1.298 | 011413#2520930300 | 1.378 |
| **103** | 011413#0301030300 | 1.041 | 011413#0321030300 | 1.221 | 011413#2501030300 | 1.368 | 011413#2521030300 | 1.448 |

| | VE OMI MB - Horizontal bottom return brushless | | VE OMI MB S - Horizontal, bottom return, silenced, brushless | | VE OMI MB 4 - Horizontal, bottom return, 4-pipe brushless | | VE OMI MB 4/S – Horizontal, bottom return, silenced, 4-pipe brushless | |
|---|---|---|---|---|---|---|---|---|
| **Size** | **Code** | **€** | **Code** | **€** | **Code** | **€** | **Code** | **€** |
| **13** | 011413#1400130300 | 683 | 011413#1420130300 | 787 | 011413#3300130300 | 873 | 011413#3320130300 | 913 |
| **23** | 011413#1400230300 | 710 | 011413#1420230300 | 815 | 011413#3300230300 | 901 | 011413#3320230300 | 940 |
| **33** | 011413#1400330300 | 746 | 011413#1420330300 | 856 | 011413#3300330300 | 952 | 011413#3320330300 | 1000 |
| **43** | 011413#1400430300 | 799 | 011413#1420430300 | 909 | 011413#3300430300 | 1006 | 011413#3320430300 | 1.054 |
| **53** | 011413#1400530300 | 854 | 011413#1420530300 | 985 | 011413#3300530300 | 1.095 | 011413#3320530300 | 1.153 |
| **63** | 011413#1400630300 | 935 | 011413#1420630300 | 1.063 | 011413#3300630300 | 1.173 | 011413#3320630300 | 1.230 |
| **73** | 011413#1400730300 | 1014 | 011413#1420730300 | 1.174 | 011413#3300730300 | 1.298 | 011413#3320730300 | 1.364 |
| **83** | 011413#1400830300 | 1.080 | 011413#1420830300 | 1.248 | 011413#3300830300 | 1.332 | 011413#3320830300 | 1.438 |
| **93** | 011413#1400930300 | 1.161 | 011413#1420930300 | 1.337 | 011413#3300930300 | 1.372 | 011413#3320930300 | 1.566 |
| **103** | 011413#1401030300 | 1.332 | 011413#1421030300 | 1.408 | 011413#3301030300 | 1.561 | 011413#3321030300 | 1.637 |

* Available with right-hand connection

## VII: Vertical built-in unit with bottom air return

| | VE VII - Vertical built-in unit with bottom return air intake | | VE VII S - Vertical built-in, bottom return, soundproofed | | VE VII 4 - Vertical built-in unit with bottom return, 4-pipe system | | VE VII 4/S - Built-in vertical, bottom return, silenced, 4-pipe system | |
|---|---|---|---|---|---|---|---|---|
| **Size** | **Code** | **€** | **Code** | **€** | **Code** | **€** | **Code** | **€** |
| **13** | 011413#0400130300 | 356 | 011413#0420130300 | 435 | 011413#2600130300 | 516 | 011413#2620130300 | 560 |
| **23** | 011413#0400230300 | 380 | 011413#0420230300 | 461 | 011413#2600230300 | 543 | 011413#2620230300 | 587 |
| **33** | 011413#0400330300 | 383 | 011413#0420330300 | 474 | 011413#2600330300 | 563 | 011413#2620330300 | 618 |
| **43** | 011413#0400430300 | 436 | 011413#0420430300 | 529 | 011413#2600430300 | 620 | 011413#2620430300 | 675 |
| **53** | 011413#0400530300 | 471 | 011413#0420530300 | 578 | 011413#2600530300 | 683 | 011413#2620530300 | 746 |
| **63** | 011413#0400630300 | 553 | 011413#0420630300 | 653 | 011413#2600630300 | 758 | 011413#2620630300 | 821 |
| **73** | 011413#0400730300 | 621 | 011413#0420730300 | 740 | 011413#2600730300 | 857 | 011413#2620730300 | 929 |
| **83** | 011413#0400830300 | 703 | 011413#0420830300 | 812 | 011413#2600830300 | 929 | 011413#2620830300 | 1002 |
| **93** | 011413#0400930300 | 757 | 011413#0420930300 | 877 | 011413#2600930300 | 1024 | 011413#2620930300 | 1.105 |
| **103** | 011413#0401030300 | 819 | 011413#0421030300 | 946 | 011413#2601030300 | 1.094 | 011413#2621030300 | 1.174 |

| | VE VII MB - Vertical built-in unit with bottom return, brushless | | VE VII MB S – Recessed vertical unit with bottom return, brushless, soundproof | | VE VII MB 4 – Built-in vertical unit with bottom return, 4-pipe brushless, low-noise | | VE VII MB 4 S - Vertical ducted vertical concealed unit with lower return, enhanced brushless | |
|---|---|---|---|---|---|---|---|---|
| **Size** | **Code** | **€** | **Code** | **€** | **Code** | **€** | **Code** | **€** |
| **13** | 011413#1500130300 | 547 | 011413#1520130300 | 622 | 011413#3400130300 | 710 | 011413#3420130300 | 749 |
| **23** | 011413#1500230300 | 565 | 011413#1520230300 | 648 | 011413#3400230300 | 735 | 011413#3420230300 | 775 |
| **33** | 011413#1500330300 | 574 | 011413#1520330300 | 659 | 011413#3400330300 | 757 | 011413#3420330300 | 804 |
| **43** | 011413#1500430300 | 627 | 011413#1520430300 | 716 | 011413#3400430300 | 812 | 011413#3420430300 | 860 |
| **53** | 011413#1500530300 | 660 | 011413#1520530300 | 764 | 011413#3400530300 | 874 | 011413#3420530300 | 933 |
| **63** | 011413#1500630300 | 746 | 011413#1520630300 | 840 | 011413#3400630300 | 951 | 011413#3420630300 | 1008 |
| **73** | 011413#1500730300 | 815 | 011413#1520730300 | 926 | 011413#3400730300 | 1.050 | 011413#3420730300 | 1.115 |
| **83** | 011413#1500830300 | 896 | 011413#1520830300 | 999 | 011413#3400830300 | 1.122 | 011413#3420830300 | 1.188 |
| **93** | 011413#1500930300 | 949 | 011413#1520930300 | 1.065 | 011413#3400930300 | 1.217 | 011413#3420930300 | 1.293 |
| **103** | 011413#1501030300 | 1010 | 011413#1521030300 | 1.134 | 011413#3401030300 | 1.286 | 011413#3421030300 | 1.362 |

| | VE VII P - Recessed vertical unit with enhanced bottom return | | VE VII 4/P – Vertical built-in unit with bottom return, 4-pipe, high-capacity | | VE VII MB P - Built-in vertical, enhanced brushless, bottom return | | VE VII MB 4/P - Vertical built-in unit, bottom return, brushless, boosted 4-pipe system | |
|---|---|---|---|---|---|---|---|---|
| **Size** | **Code** | **€** | **Code** | **€** | **Code** | **€** | **Code** | **€** |
| **13** | 011413#0410130300 | 428 | 011413#2610130300 | 554 | 011413#1510130300 | 603 | 011413#3410130300 | 728 |
| **23** | 011413#0410230300 | 453 | 011413#2610230300 | 581 | 011413#1510230300 | 628 | 011413#3410230300 | 755 |
| **33** | 011413#0410330300 | 490 | 011413#2610330300 | 634 | 011413#1510330300 | 631 | 011413#3410330300 | 776 |
| **43** | 011413#0410430300 | 546 | 011413#2610430300 | 691 | 011413#1510430300 | 688 | 011413#3410430300 | 832 |
| **53** | 011413#0410530300 | 585 | 011413#2610530300 | 754 | 011413#1510530300 | 727 | 011413#3410530300 | 895 |
| **63** | 011413#0410630300 | 661 | 011413#2610630300 | 829 | 011413#1510630300 | 802 | 011413#3410630300 | 970 |
| **73** | 011413#0410730300 | 739 | 011413#2610730300 | 928 | 011413#1510730300 | 880 | 011413#3410730300 | 1.069 |
| **83** | 011413#0410830300 | 811 | 011413#2610830300 | 1000 | 011413#1510830300 | 952 | 011413#3410830300 | 1.141 |
| **93** | 011413#0410930300 | 963 | 011413#2610930300 | 1.197 | 011413#1510930300 | 1.316 | 011413#3410930300 | 1.544 |
| **103** | 011413#0411030300 | 1.030 | 011413#2611030300 | 1.266 | 011413#1511030300 | 1.385 | 011413#3411030300 | 1.613 |

* Available with right-hand connection

## VIF: Vertical built-in unit with front return air intake

| | VE VIF - Vertical built-in unit with front air return | | VE VIF S - Vertical built-in front intake silenced unit | | VE VIF 4 - Vertical recessed unit with front return, 4-pipe system | | VE VIF 4/S - Vertical built-in, front return, silenced, 4-pipe system | |
|---|---|---|---|---|---|---|---|---|
| **Size** | **Code** | **€** | **Code** | **€** | **Code** | **€** | **Code** | **€** |
| **13** | 011413#0500130300 | 361 | 011413#0520130300 | 439 | 011413#2700130300 | 521 | 011413#2720130300 | 565 |
| **23** | 011413#0500230300 | 386 | 011413#0520230300 | 468 | 011413#2700230300 | 549 | 011413#2720230300 | 593 |
| **33** | 011413#0500330300 | 397 | 011413#0520330300 | 479 | 011413#2700330300 | 570 | 011413#2720330300 | 623 |
| **43** | 011413#0500430300 | 440 | 011413#0520430300 | 537 | 011413#2700430300 | 626 | 011413#2720430300 | 681 |
| **53** | 011413#0500530300 | 475 | 011413#0520530300 | 582 | 011413#2700530300 | 688 | 011413#2720530300 | 750 |
| **63** | 011413#0500630300 | 554 | 011413#0520630300 | 659 | 011413#2700630300 | 764 | 011413#2720630300 | 827 |
| **73** | 011413#0500730300 | 622 | 011413#0520730300 | 747 | 011413#2700730300 | 863 | 011413#2720730300 | 936 |
| **83** | 011413#0500830300 | 700 | 011413#0520830300 | 821 | 011413#2700830300 | 937 | 011413#2720830300 | 1009 |
| **93** | 011413#0500930300 | 757 | 011413#0520930300 | 882 | 011413#2700930300 | 1.030 | 011413#2720930300 | 1.110 |
| **103** | 011413#0501030300 | 826 | 011413#0521030300 | 951 | 011413#2701030300 | 1.099 | 011413#2721030300 | 1.179 |

| | VE VIF MB - Vertical built-in unit with front return, brushless motor | | VE VIF MB S – Vertical recessed, front return, brushless, soundproofed | | VE VIF MB 4 - Vertical recessed front return 4-pipe silent brushless unit | | VE VIF MB 4 S - Built-in vertical, front return, enhanced brushless | |
|---|---|---|---|---|---|---|---|---|
| **Size** | **Code** | **€** | **Code** | **€** | **Code** | **€** | **Code** | **€** |
| **13** | 011413#1600130300 | 550 | 011413#1620130300 | 626 | 011413#3500130300 | 714 | 011413#3520130300 | 754 |
| **23** | 011413#1600230300 | 574 | 011413#1620230300 | 655 | 011413#3500230300 | 742 | 011413#3520230300 | 782 |
| **33** | 011413#1600330300 | 588 | 011413#1620330300 | 664 | 011413#3500330300 | 761 | 011413#3520330300 | 809 |
| **43** | 011413#1600430300 | 631 | 011413#1620430300 | 722 | 011413#3500430300 | 820 | 011413#3520430300 | 867 |
| **53** | 011413#1600530300 | 665 | 011413#1620530300 | 769 | 011413#3500530300 | 880 | 011413#3520530300 | 937 |
| **63** | 011413#1600630300 | 748 | 011413#1620630300 | 847 | 011413#3500630300 | 958 | 011413#3520630300 | 1015 |
| **73** | 011413#1600730300 | 816 | 011413#1620730300 | 933 | 011413#3500730300 | 1.056 | 011413#3520730300 | 1.122 |
| **83** | 011413#1600830300 | 894 | 011413#1620830300 | 1006 | 011413#3500830300 | 1.130 | 011413#3520830300 | 1.196 |
| **93** | 011413#1600930300 | 949 | 011413#1620930300 | 1.069 | 011413#3500930300 | 1.222 | 011413#3520930300 | 1.298 |
| **103** | 011413#1601030300 | 1018 | 011413#1621030300 | 1.138 | 011413#3501030300 | 1.292 | 011413#3521030300 | 1.367 |

| | VE VIF P - Enhanced vertical recessed unit with front return air | | VE VIF 4/P - Vertical built-in front return, enhanced 4-pipe system | | VE VIF MB P – Vertical concealed unit with frontal return, enhanced brushless | | VE VIF MB 4/P - Vertical recessed front-return brushless enhanced 4-pipe unit | |
|---|---|---|---|---|---|---|---|---|
| **Size** | **Code** | **€** | **Code** | **€** | **Code** | **€** | **Code** | **€** |
| **13** | 011413#0510130300 | 433 | 011413#2710130300 | 559 | 011413#1610130300 | 608 | 011413#3510130300 | 733 |
| **23** | 011413#0510230300 | 461 | 011413#2710230300 | 587 | 011413#1610230300 | 634 | 011413#3510230300 | 761 |
| **33** | 011413#0510330300 | 494 | 011413#2710330300 | 641 | 011413#1610330300 | 637 | 011413#3510330300 | 782 |
| **43** | 011413#0510430300 | 552 | 011413#2710430300 | 697 | 011413#1610430300 | 694 | 011413#3510430300 | 838 |
| **53** | 011413#0510530300 | 590 | 011413#2710530300 | 758 | 011413#1610530300 | 731 | 011413#3510530300 | 900 |
| **63** | 011413#0510630300 | 667 | 011413#2710630300 | 835 | 011413#1610630300 | 809 | 011413#3510630300 | 976 |
| **73** | 011413#0510730300 | 746 | 011413#2710730300 | 934 | 011413#1610730300 | 887 | 011413#3510730300 | 1.075 |
| **83** | 011413#0510830300 | 820 | 011413#2710830300 | 1008 | 011413#1610830300 | 961 | 011413#3510830300 | 1.149 |
| **93** | 011413#0510930300 | 981 | 011413#2710930300 | 1.202 | 011413#1610930300 | 1.320 | 011413#3510930300 | 1.254 |
| **103** | 011413#0511030300 | 1.046 | 011413#2711030300 | 1.271 | 011413#1611030300 | 1.391 | 011413#3511030300 | 1.323 |

* Available with right-hand connection

## OIP: Horizontal recessed unit with rear return air

| | VE OIP - Horizontal recessed unit with rear return air | | VE OIP S - Horizontal built-in rear intake, soundproofed | | VE OIP 4 - Horizontal recessed unit with rear return, 4-pipe system | | VE OIP 4/S - Horizontal concealed rear return silenced 4-pipe unit | |
|---|---|---|---|---|---|---|---|---|
| **Size** | **Code** | **€** | **Code** | **€** | **Code** | **€** | **Code** | **€** |
| **13** | 011413#0600130300 | 363 | 011413#0620130300 | 439 | 011413#2800130300 | 521 | 011413#2820130300 | 565 |
| **23** | 011413#0600230300 | 387 | 011413#0620230300 | 468 | 011413#2800230300 | 549 | 011413#2820230300 | 593 |
| **33** | 011413#0600330300 | 396 | 011413#0620330300 | 479 | 011413#2800330300 | 570 | 011413#2820330300 | 623 |
| **43** | 011413#0600430300 | 442 | 011413#0620430300 | 537 | 011413#2800430300 | 626 | 011413#2820430300 | 681 |
| **53** | 011413#0600530300 | 477 | 011413#0620530300 | 582 | 011413#2800530300 | 688 | 011413#2820530300 | 750 |
| **63** | 011413#0600630300 | 554 | 011413#0620630300 | 659 | 011413#2800630300 | 764 | 011413#2820630300 | 827 |
| **73** | 011413#0600730300 | 625 | 011413#0620730300 | 747 | 011413#2800730300 | 863 | 011413#2820730300 | 936 |
| **83** | 011413#0600830300 | 707 | 011413#0620830300 | 821 | 011413#2800830300 | 937 | 011413#2820830300 | 1009 |
| **93** | 011413#0600930300 | 757 | 011413#0620930300 | 882 | 011413#2800930300 | 1.030 | 011413#2820930300 | 1.110 |
| **103** | 011413#0601030300 | 822 | 011413#0621030300 | 951 | 011413#2801030300 | 1.099 | 011413#2821030300 | 1.179 |

| | VE OIP MB – Horizontal recessed unit with rear return, brushless | | VE OIP MB S - Horizontal built-in unit with rear return, brushless, soundproofed | | VE OIP MB 4 - Horizontal recessed unit with rear return, 4-pipe brushless, soundproofed | | VE OIP MB 4 S - Horizontal built-in unit with rear return, enhanced brushless | |
|---|---|---|---|---|---|---|---|---|
| **Size** | **Code** | **€** | **Code** | **€** | **Code** | **€** | **Code** | **€** |
| **13** | 011413#1700130300 | 550 | 011413#1720130300 | 626 | 011413#3600130300 | 714 | 011413#3620130300 | 754 |
| **23** | 011413#1700230300 | 575 | 011413#1720230300 | 655 | 011413#3600230300 | 742 | 011413#3620230300 | 782 |
| **33** | 011413#1700330300 | 587 | 011413#1720330300 | 664 | 011413#3600330300 | 761 | 011413#3620330300 | 809 |
| **43** | 011413#1700430300 | 627 | 011413#1720430300 | 722 | 011413#3600430300 | 820 | 011413#3620430300 | 867 |
| **53** | 011413#1700530300 | 670 | 011413#1720530300 | 769 | 011413#3600530300 | 880 | 011413#3620530300 | 937 |
| **63** | 011413#1700630300 | 748 | 011413#1720630300 | 847 | 011413#3600630300 | 958 | 011413#3620630300 | 1015 |
| **73** | 011413#1700730300 | 819 | 011413#1720730300 | 933 | 011413#3600730300 | 1.056 | 011413#3620730300 | 1.122 |
| **83** | 011413#1700830300 | 899 | 011413#1720830300 | 1006 | 011413#3600830300 | 1.130 | 011413#3620830300 | 1.196 |
| **93** | 011413#1700930300 | 949 | 011413#1720930300 | 1.069 | 011413#3600930300 | 1.222 | 011413#3620930300 | 1.298 |
| **103** | 011413#1701030300 | 1.015 | 011413#1721030300 | 1.138 | 011413#3601030300 | 1.292 | 011413#3621030300 | 1.367 |

| | VE OIP P - Horizontal built-in rear return enhanced | | VE OIP 4/P - Horizontal recessed unit with rear return, 4-pipe enhanced | | VE OIP MB P - Horizontal ducted unit with rear return, enhanced brushless | | VE OIP MB 4/P - Horizontal concealed unit with rear return, brushless, enhanced 4-pipe system | |
|---|---|---|---|---|---|---|---|---|
| **Size** | **Code** | **€** | **Code** | **€** | **Code** | **€** | **Code** | **€** |
| **13** | 011413#0610130300 | 433 | 011413#2810130300 | 559 | 011413#1710130300 | 608 | 011413#3610130300 | 733 |
| **23** | 011413#0610230300 | 461 | 011413#2810230300 | 587 | 011413#1710230300 | 634 | 011413#3610230300 | 761 |
| **33** | 011413#0610330300 | 494 | 011413#2810330300 | 641 | 011413#1710330300 | 637 | 011413#3610330300 | 782 |
| **43** | 011413#0610430300 | 552 | 011413#2810430300 | 697 | 011413#1710430300 | 694 | 011413#3610430300 | 838 |
| **53** | 011413#0610530300 | 590 | 011413#2810530300 | 758 | 011413#1710530300 | 731 | 011413#3610530300 | 900 |
| **63** | 011413#0610630300 | 667 | 011413#2810630300 | 835 | 011413#1710630300 | 809 | 011413#3610630300 | 976 |
| **73** | 011413#0610730300 | 746 | 011413#2810730300 | 934 | 011413#1710730300 | 887 | 011413#3610730300 | 1.075 |
| **83** | 011413#0610830300 | 820 | 011413#2810830300 | 1008 | 011413#1710830300 | 961 | 011413#3610830300 | 1.149 |
| **93** | 011413#0610930300 | 968 | 011413#2810930300 | 1.202 | 011413#1710930300 | 1.320 | 011413#3610930300 | 1.549 |
| **103** | 011413#0611030300 | 1.035 | 011413#2811030300 | 1.271 | 011413#1711030300 | 1.391 | 011413#3611030300 | 1.618 |

* Available with right-hand connection

## OII: Horizontal concealed unit with bottom return air intake

| | VE OII - Horizontal concealed unit with bottom return air intake | | VE OII S - Horizontal recessed unit with bottom return, soundproofed | | VE OII 4 – Horizontal recessed unit bottom return, 4-pipe system | | VE OII 4/S - Horizontal recessed, bottom return, silenced, 4-pipe | |
|---|---|---|---|---|---|---|---|---|
| **Size** | **Code** | **€** | **Code** | **€** | **Code** | **€** | **Code** | **€** |
| **13** | 011413#0700130300 | 367 | 011413#0720130300 | 446 | 011413#2900130300 | 527 | 011413#2920130300 | 573 |
| **23** | 011413#0700230300 | 389 | 011413#0720230300 | 472 | 011413#2900230300 | 554 | 011413#2920230300 | 598 |
| **33** | 011413#0700330300 | 396 | 011413#0720330300 | 486 | 011413#2900330300 | 578 | 011413#2920330300 | 631 |
| **43** | 011413#0700430300 | 445 | 011413#0720430300 | 542 | 011413#2900430300 | 631 | 011413#2920430300 | 686 |
| **53** | 011413#0700530300 | 487 | 011413#0720530300 | 587 | 011413#2900530300 | 692 | 011413#2920530300 | 755 |
| **63** | 011413#0700630300 | 563 | 011413#0720630300 | 664 | 011413#2900630300 | 769 | 011413#2920630300 | 832 |
| **73** | 011413#0700730300 | 641 | 011413#0720730300 | 754 | 011413#2900730300 | 870 | 011413#2920730300 | 942 |
| **83** | 011413#0700830300 | 707 | 011413#0720830300 | 826 | 011413#2900830300 | 942 | 011413#2920830300 | 1015 |
| **93** | 011413#0700930300 | 764 | 011413#0720930300 | 890 | 011413#2900930300 | 1.038 | 011413#2920930300 | 1.119 |
| **103** | 011413#0701030300 | 826 | 011413#0721030300 | 958 | 011413#2901030300 | 1.105 | 011413#2921030300 | 1.186 |

| | VE OII MB - Horizontal built-in unit with bottom return, brushless | | VE OII MB S - Horizontal ducted concealed unit with bottom return, brushless, soundproofed | | VE OII MB 4 – Horizontal built-in unit with bottom return, 4-pipe, brushless, soundproofed | | VE OII MB 4 S - Horizontal ducted built-in unit, bottom return, enhanced brushless | |
|---|---|---|---|---|---|---|---|---|
| **Size** | **Code** | **€** | **Code** | **€** | **Code** | **€** | **Code** | **€** |
| **13** | 011413#1800130300 | 559 | 011413#1820130300 | 632 | 011413#3700130300 | 721 | 011413#3720130300 | 760 |
| **23** | 011413#1800230300 | 584 | 011413#1820230300 | 659 | 011413#3700230300 | 747 | 011413#3720230300 | 787 |
| **33** | 011413#1800330300 | 589 | 011413#1820330300 | 674 | 011413#3700330300 | 769 | 011413#3720330300 | 818 |
| **43** | 011413#1800430300 | 641 | 011413#1820430300 | 727 | 011413#3700430300 | 824 | 011413#3720430300 | 871 |
| **53** | 011413#1800530300 | 679 | 011413#1820530300 | 775 | 011413#3700530300 | 886 | 011413#3720530300 | 942 |
| **63** | 011413#1800630300 | 756 | 011413#1820630300 | 853 | 011413#3700630300 | 962 | 011413#3720630300 | 1020 |
| **73** | 011413#1800730300 | 831 | 011413#1820730300 | 939 | 011413#3700730300 | 1.063 | 011413#3720730300 | 1.128 |
| **83** | 011413#1800830300 | 899 | 011413#1820830300 | 1011 | 011413#3700830300 | 1.135 | 011413#3720830300 | 1.200 |
| **93** | 011413#1800930300 | 958 | 011413#1820930300 | 1.077 | 011413#3700930300 | 1.230 | 011413#3720930300 | 1.306 |
| **103** | 011413#1801030300 | 1.018 | 011413#1821030300 | 1.145 | 011413#3701030300 | 1.298 | 011413#3721030300 | 1.373 |

| | VE OII P - Horizontal built-in unit with enhanced bottom return air | | VE OII 4/P - Horizontal built-in unit with bottom return, enhanced 4-pipe system | | VE OII MB P - Horizontal recessed unit with bottom return, enhanced brushless | | VE OII MB 4/P - Horizontal built-in unit, bottom return, brushless, enhanced 4-pipe system | |
|---|---|---|---|---|---|---|---|---|
| **Size** | **Code** | **€** | **Code** | **€** | **Code** | **€** | **Code** | **€** |
| **13** | 011413#0710130300 | 439 | 011413#2910130300 | 565 | 011413#1810130300 | 614 | 011413#3710130300 | 740 |
| **23** | 011413#0710230300 | 466 | 011413#2910230300 | 592 | 011413#1810230300 | 641 | 011413#3710230300 | 766 |
| **33** | 011413#0710330300 | 504 | 011413#2910330300 | 648 | 011413#1810330300 | 645 | 011413#3710330300 | 790 |
| **43** | 011413#0710430300 | 557 | 011413#2910430300 | 702 | 011413#1810430300 | 698 | 011413#3710430300 | 844 |
| **53** | 011413#0710530300 | 595 | 011413#2910530300 | 763 | 011413#1810530300 | 736 | 011413#3710530300 | 904 |
| **63** | 011413#0710630300 | 674 | 011413#2910630300 | 840 | 011413#1810630300 | 815 | 011413#3710630300 | 982 |
| **73** | 011413#0710730300 | 752 | 011413#2910730300 | 940 | 011413#1810730300 | 893 | 011413#3710730300 | 1.083 |
| **83** | 011413#0710830300 | 824 | 011413#2910830300 | 1014 | 011413#1810830300 | 966 | 011413#3710830300 | 1.155 |
| **93** | 011413#0710930300 | 986 | 011413#2910930300 | 1.211 | 011413#1810930300 | 1.329 | 011413#3710930300 | 1.262 |
| **103** | 011413#0711030300 | 1.053 | 011413#2911030300 | 1.278 | 011413#1811030300 | 1.397 | 011413#3711030300 | 1.329 |

* Available with right-hand connection

| ACCESSORIES | | | | |
|---|---|---|---|---|
| | | Compatibility | Code | € |
| 2V2 | 2-way valves for 2-pipe system with 230V actuator | 13÷103 | 011993#380000 | 151 |
| 2V4 | 2-way valves for 4-pipe system with 230V actuator | | 011993#400000 | 328 |
| 3V4 | 3-way valves for 4-pipe systems with 230V actuator | | 011993#390000 | 375 |
| 3V2-25-1NO | 3-way valve for 2-pipe systems with end-of-stroke microswitch (4-wire) | | 011993#840000 | 190 |
| CBB | On-board control unit for brushless motors with 2/4-wire control, with or without valves | | 011993#570000 | 288 |
| CRA | Electronic thermostat for fan coil units | | 011993#600000 | 105 |
| CVA | 3-speed machine-mounted control | | 011993#540000 | 43 |
| CVC | On-board electronic control unit, 230 V AC, with OFF/Forward/Reverse + 3 speeds + thermostat | | 011993#580000 | 118 |
| CVD1 | Microprocessor-based on-machine control unit, 230 V AC + 2/4-pipe management with or without valves | | 011993#590000 | 221 |
| MOR | "Mamut"-type terminal block | | 011993#630000 | 12 |
| P | Feet | | 011993#500000 | 41 |
| SDI.4X3A | Board with 4 outputs (4 motors, 3 speeds) rated at 3 A | | 011995#0076020 | 274 |
| TEL | Remote control system | | | 320 |
| TMB | Minimum thermostat | | 011993#620000 | 42 |
| VA | Auxiliary drain pan for vertical versions | | 011993#530000 | 30 |
| FTI | Galvanized recessed subframe for VIP versions | 13÷23 | 011993#641323 | 83 |
| | | 33÷43 | 011993#643343 | 107 |
| | | 53÷63 | 011993#645363 | 127 |
| | | 73÷83 | 011993#647383 | 149 |
| | | 93÷103 | 011993#649303 | 170 |
| P1 | Panel for VIP/ONP version | 13÷23 | 011993#411323 | 104 |
| | | 33÷43 | 011993#413343 | 127 |
| | | 53÷63 | 011993#415363 | 153 |
| | | 73÷83 | 011993#417383 | 185 |
| | | 93÷103 | 011993#419303 | 207 |
| P2 | Panel for VIP2 version with control door | 13÷23 | 011993#421323 | 111 |
| | | 33÷43 | 011993#423343 | 142 |
| | | 53÷63 | 011993#425363 | 163 |
| | | 73÷83 | 011993#427383 | 193 |
| | | 93÷103 | 011993#429303 | 217 |
| PA | Plenum with circular suction connections | 13÷23 | 011993#471323 | 122 |
| | | 33÷43 | 011993#473343 | 151 |
| | | 53÷63 | 011993#475363 | 175 |
| | | 73÷83 | 011993#477383 | 204 |
| | | 93÷103 | 011993#479303 | 231 |
| PCB | Lower closing panel without grille in pre-painted sheet metal | 13÷23 | 011993#451323 | 35 |
| | | 33÷43 | 011993#453343 | 43 |
| | | 53÷63 | 011993#455363 | 53 |
| | | 73÷83 | 011993#457383 | 63 |
| | | 93÷103 | 011993#459303 | 67 |

| ACCESSORIES | | | | |
|---|---|---|---|---|
| | | Compatibility | Code | € |
| PCPB | Middle rear closing panel in pre-painted sheet metal | 13÷23 | 011993#441323 | 55 |
| | | 33÷43 | 011993#443343 | 70 |
| | | 53÷63 | 011993#445363 | 87 |
| | | 73÷83 | 011993#447383 | 102 |
| | | 93÷103 | 011993#449303 | 114 |
| PCPF | Lower rear closing panel in pre-painted sheet metal | 13÷23 | 011993#431323 | 53 |
| | | 33÷43 | 011993#433343 | 65 |
| | | 53÷63 | 011993#435363 | 79 |
| | | 73÷83 | 011993#437383 | 96 |
| | | 93÷103 | 011993#439303 | 105 |
| PMI | 90° supply plenum for VIP and ONP versions with insulation | 13÷23 | 011993#651323 | 71 |
| | | 33÷43 | 011993#653343 | 88 |
| | | 53÷63 | 011993#655363 | 104 |
| | | 73÷83 | 011993#657383 | 119 |
| | | 93÷103 | 011993#659303 | 137 |
| PM | Supply plenum with circular outlets | 13÷23 | 011993#461323 | 121 |
| | | 33÷43 | 011993#463343 | 136 |
| | | 53÷63 | 011993#465363 | 151 |
| | | 73÷83 | 011993#467383 | 172 |
| | | 93÷103 | 011993#469303 | 187 |
| PMP1 | Condensate lifting pump with 8A alarm contact for vertical VE units | 13÷103 | 011993#810000 | 412 |
| PMP2 | Condensate lifting pump with 8A alarm contact for horizontal VEs | | 011993#820000 | 403 |

*incompatible with TMB or MOR-TMB or STLS
For the wired controller price lists, refer to the pages at the beginning of the chapter.

# MI A3

## Hydronic wall panels

2.7 kW÷4.4 kW

Designed to fully meet efficiency, low-noise, and aesthetic requirements. The microprocessor control ensures precise comfort in the room. Three-way valve installed on board the unit. ABS casing with high mechanical strength and excellent ageing resistance; DC brushless fan motor; water coil with large heat exchange surface equipped with air vent valve and condensate drain; horizontal fins and independent vertically adjustable deflectors; complete function management via LCD remote control; cooling and heating operation with three fan speeds plus Auto mode. Manual restart function and Timer function.

**As standard:**
Three-way 230 V diverter valve with compact-type electric actuator, normally closed and equipped with protective cover, air bleed valve, LCD remote control, volt-free contact for remote ON-OFF, ModBus input, condensate collection tray and drain.

**Limit Switch Micro Switch**
The unit is equipped with a limit micro switch installed on the three-way diverter valve. This micro switch is wired to a dedicated terminal block from which the signal can be used for various purposes. In particular, this volt-free contact is useful for implementing system automation functions.

## Accessories

- **WRC11**: Compact multifunction wired controller
- **WRC16**: Allows control of up to 16 indoor units using a single wired controller via the XYE ports.

| | | | 26A3 | 35A3 | 42A3 |
|---|---|---|---|---|---|
| **Cooling** | (1) Cooling capacity | kW | 2,7/2,59/2,39 | 3,81/3,3/2,88 | 4,47/3,98/3,48 |
| | | kBTU/h | 9,2/8,8/8,1 | 12/11,2/9,8 | 15,2/13,5/11,8 |
| | Power input | W | 13/11/10 | 34/22/15 | 26/18/13 |
| | Water flow rate | m³/h | 0,48/0,46/0,42 | 0,67/0,57/0,51 | 0,77/0,68/0,61 |
| | Water pressure losses | kPa | 31,61/28,63/25,36 | 56,75/41,23/33,02 | 41,17/33,54/27,05 |
| **Heating** | (2) Heating capacity | kW | 2,94/2,8/2,58 | 4,3/3,65/3,09 | 4,84/4,23/3,62 |
| | | kBTU/h | 10/9,5/8,8 | 14,6/12,4/10,5 | 16,5/14,4/12,3 |
| | Power input | W | 11/11/9 | 31/20/14 | 22/16/12 |
| | Water flow rate | m³/h | 0,51/0,49/0,46 | 0,73/0,64/0.56 | 0,84/0,73/0,64 |
| | Water pressure losses | kPa | 32,66/34,89/30,24 | 51,86/47,53/35,69 | 36,82/33,83/26,26 |
| **Sound data** | (3) Maximum–medium–minimum sound pressure | dB(A) | 32/30/27 | 45/39/35 | 38/34/30 |
| | Hydraulic connections | Ø | 3/4" | 3/4" | 3/4" |
| | Airflow | m³/h | 492/454/400 | 825/689/590 | 862/741/634 |
| **Power supply** | Power supply | V~/Ph/Hz | 230/1/50 | | |
| | Absorbed current | A | 0,2 | 0,4 | 0,3 |
| **Heat exchange coil** | Rows | | 2 | 2 | 2 |
| | Max. pressure | MPa | 1.6 | | |
| | Diameter | mm | Φ7 | | |
| | Condensate drain | mm | OD Φ20 | | |
| | Heat exchanger coil length | mm | 635x26.74 | | 785x26.74 |
| | Fin type | | Hydrophilic aluminum | | |
| | No. of circuits | | 5 | 5 | 7 |

Not equipped with a condensate drain pump.
(1) Cooling capacity: Inlet air temperature: 27°C d.b. / 19°C w.b.
Water inlet/outlet temperature: 7°C / 12°C
(2) Heating capacity: Inlet air temperature: 20°C d.b.
Water inlet/outlet temperature: 45°C / 40°C
(3) Noise level tested in a semi-anechoic chamber.

## Dimensional Drawings

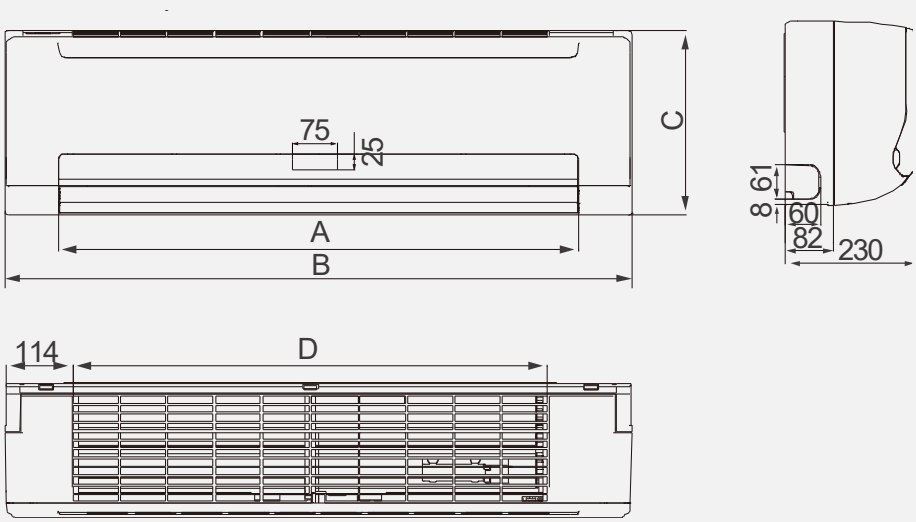


| | 26A3 | 35A3 | 42A3 |
|---|---|---|---|
| A | 732 | 732 | 892 |
| B | 915 | 915 | 1.072 |
| C | 290 | 290 | 315 |
| D | 663 | 663 | 813 |
| Kg | 12,7 | 12,7 | 15,1 |

Dimensions in mm

Left-hand side hydraulic connections

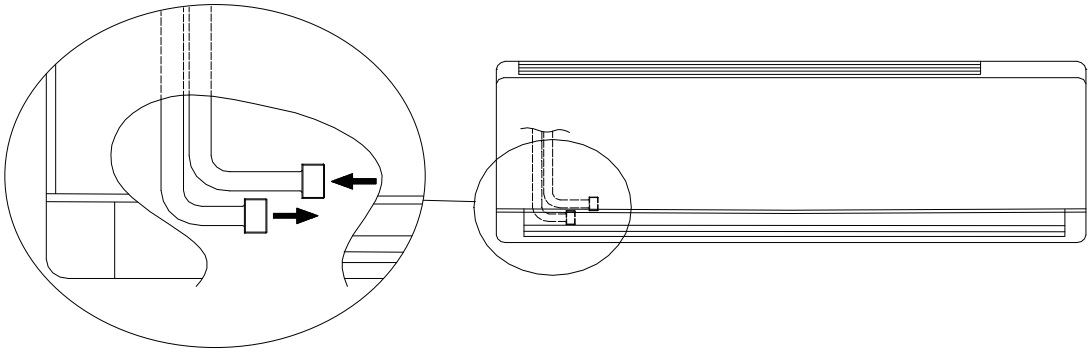

## Price list

| MI A3 | | 26A3 | 35A3 | 42A3 |
|---|---|---|---|---|
| Hydronic wall-mounted unit | code | 011422#020026 | 011422#020035 | 011422#020042 |
| | € | 825 | 912 | 1.141 |

| ACCESSORIES | | Code | € |
|---|---|---|---|
| WRC11 | Compact multifunction wired controller | 012108#010034 | 171 |
| WRC16 | Allows control of up to 16 indoor units by means of a single wired remote controller via the XYE terminals. | 012108#010095 | 211 |

# HCA1 - HCA1/4

## Hydronic DC brushless cassettes

2.0 kW÷6.1 kW

MAXA hydronic cassettes with DC brushless motor are designed to fully meet the efficiency, low-noise and aesthetic requirements demanded by the market. The microprocessor control ensures precise comfort in the room. The ModBus input allows quick integration with external BMS systems.
The compact dimensions meet installation needs in false ceilings thanks to the reduced sizes of 57 x 57 cm or 84 x 84 cm in the higher-capacity versions.
Provision for local adjacent air supply (size 60 only) and for fresh air intake (all sizes).
An auxiliary condensate collection tray is always included. For the HCA1 60 versions and all HCA 1/4 versions, it is pre-installed.

### Unit composition:

- High-efficiency finned coils with low pressure drops.
- Internal closed-cell insulation to minimize thermal loss and acoustic emission.
- Automatic flap movement.
- Condensate lift pump up to a maximum height of 500 mm, supplied as standard
- Modbus input

### Valve kit *

- 3V2C: 3-way 2-pipe valve kit (HCA 22-29-35-42)
- 3V2CG: 3-way valve kit for 2-pipe systems (HCA 60)
- 3V4C: 3-way valve kit, 4-pipe system (HCA 22-35-50)
- 3V4CG: 4-pipe 3-way valve kit (HCA 60)

### Valve kit for systems with modulating pump

- 2V2C: 2-way valve kit for 2-pipe system (HCA 22-29-35-42)
- 2V2CG: 2-way valve kit, 2-pipe (HCA 60)
- 2V4C: 2-way 4-pipe valve kit (HCA 35–50)
- 2V4CG: 2-way valve kit, 4-pipe system (HCA 60)

### 3-way / 2-way valve kit *

The kit consists of:

- No. 2 nipples / No. 1 nipple
- no. 4 O-rings / no. 2 O-rings
- No. 2 copper connection pipes / No. 1 copper connection pipe
- No. 1 three-way valve body – 4 ports / No. 1 two-way valve body – 2 ports
- No. 1 ON/OFF actuator / No. 1 ON/OFF actuator

* For optimal operation it is always necessary to connect the water shut-off valve(s). In the absence of this device, room temperature control may not be guaranteed.

## Accessories

- **WRC11**: Compact multifunction wired controller
- **WRC16**: Allows control of up to 16 indoor units using a single wired controller via the XYE ports.

### Versions

- **HCA1**: Cassette unit for 2-pipe system with electronic control and remote control
- **HCA1/4** : Cassette unit for 4-pipe system with electronic control and remote control

2V4C/2V4CG

3V4C

3V2C/3V2CG

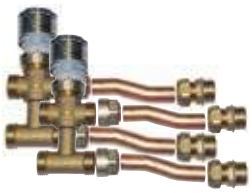

3V4CG

| | | | 22 | 29 | 35 | 42 | 60 |
|---|---|---|---|---|---|---|---|
| HCA1 | (1) Cooling capacity | W | 2.000 | 2.980 | 3.960 | 4.200 | 6.120 |
| | | BTU/h | 6.826 | 10.171 | 13.515 | 14.335 | 20.888 |
| | Water flow rate | m³/h | 0,35 | 0,53 | 0,7 | 0,75 | 1,1 |
| | (1) Power input | W | 5 | 15 | 28 | 43 | 75 |
| | (2) Heating capacity | W | 2.240 | 2.610 | 4.630 | 4.950 | 6. 270 |
| | | BTU/h | 7.645 | 8.908 | 15.802 | 16.894 | 21.400 |
| | Water flow rate | m³/h | 0,35 | 0,53 | 0,7 | 0,75 | 1,1 |
| | (2) Power input | W | 5 | 15 | 28 | 33 | 76 |
| | Maximum - medium - minimum sound pressure (3) | dB(A) | 39/33/27 | 39/33/27 | 42/36/30 | 43/38/32 | 44/40/34 |
| | Maximum - medium - minimum sound power (3) | dB(A) | 51/45/39 | 51/45/39 | 54/48/42 | 55/50/44 | - |
| | Airflow rate | m³/h | 322 | 535 | 719 | 781 | 1229 |
| | Fan type | | Centrifugal | | | | |
| | No. of rows | | 2 | | | | |
| | Electric motor | | DC | | | | |

| | | | 35 | 50 | 60 |
|---|---|---|---|---|---|
| HCA1/4 | (1) Cooling capacity | W | 3.080 | 3.050 | 5.620 |
| | | BTU/h | 10.512 | 10.410 | 19.181 |
| | Water flow rate | m³/h | 0,56 | 0,54 | 1,04 |
| | (1) Power input | W | 37 | 32 | 60 |
| | (2) Heating capacity | W | 5.520 | 5.970 | 7.660 |
| | | BTU/h | 18.840 | 20.376 | 26.144 |
| | Water flow rate | m³/h | 0,42 | 0,46 | 0,73 |
| | (2) Power input | W | 28 | 32 | 61 |
| | Maximum - medium - minimum sound pressure (3) | dB(A) | 42/35/30 | 44/39/31 | 44/39/33 |
| | Airflow rate | m³/h | 723 | 731 | 1389 |
| | Fan type | | Centrifugal | | |
| | No. of rows (cooling / heating) | | 4/3 | 4/3 | 9/3 |
| | Electric motor | | DC | | |

(1) Inlet air temperature: 27°C d.b./19.5°C w.b. at maximum speed
inlet/outlet water temperature: 7°C / 12°C at maximum speed
(2) Inlet air temperature: 20°C d.b. at maximum speed
Inlet water temperature: 50°C at maximum speed

(3) At a distance of 1 m and a reverberation time of 0.5 s, maximum velocity

## Dimensional Drawings

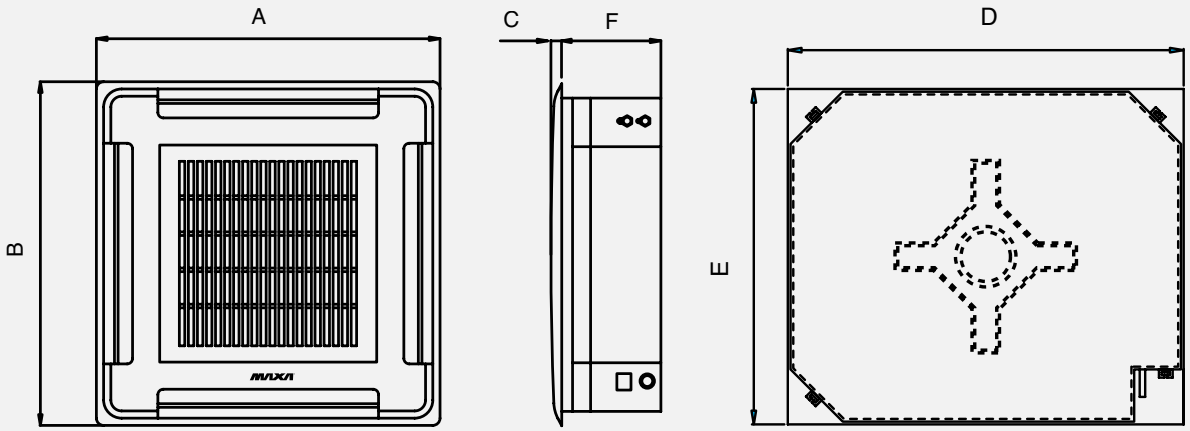


| | HCA1 22 | HCA1 29 | HCA1 35<br>HCA1/4 35 | HCA1 42<br>HCA1/4 50 | HCA1 60<br>HCA1/4 60 |
|---|---|---|---|---|---|
| A | 647 | 647 | 647 | 647 | 950 |
| B | 647 | 647 | 647 | 647 | 950 |
| C | 50 | 50 | 50 | 50 | 45 |
| D | 575 | 575 | 575 | 575 | 840 |
| E | 575 | 575 | 575 | 575 | 840 |
| F | 261 | 261 | 261 | 261 | 300 |
| Kg | 19 | 19 | 19 | 19 | 33,5 |

Dimensions in mm

# Price list

| HCA1 | | 22 | 29 | 35 | 42 | 60 |
|---|---|---|---|---|---|---|
| Cassette unit for 2-pipe system with electronic control and remote control | **Body Code** | 0111318#010022 | 0111318#010029 | 0111318#010035 | 0111318#010042 | 0111318#010060 |
| | **Panel Code** | 0101325#18010 | 0101325#18010 | 0101325#18010 | 0101325#18010 | 0101325#18030 |
| | **Drip Tray Code** | 0101325#19010 | 0101325#19010 | 0101325#19010 | 0101325#19010 | Installed |
| | € | 988 | 1.034 | 1.072 | 1.159 | 1.512 |

| HCA1 ACCESSORIES | | | | | | | |
|---|---|---|---|---|---|---|---|
| 2V2C* | 2-way valve kit | code | 0119100015 | 0119100015 | 0119100015 | 0119100015 | - |
| | | € | 73 | 73 | 73 | 73 | - |
| 2V2CG* | 2-way valve kit | code | - | - | - | - | 0119100020 |
| | | € | - | - | - | - | 73 |
| 3V2C* | 3-way valve kit | code | 0119100013 | 0119100013 | 0119100013 | 0119100013 | - |
| | | € | 108 | 108 | 108 | 108 | - |
| 3V2CG* | 3-way valve kit (mandatory accessory) | code | - | - | - | - | 0119100019 |
| | | € | - | - | - | - | 84 |
| WRC11 | Compact multifunction wired controller | code | 012108#010034 | | | | |
| | | € | 171 | | | | |
| WRC16 | Allows control of up to 16 indoor units by means of a single wired remote controller via the XYE terminals. | code | 012108#010095 | | | | |
| | | € | 211 | | | | |

* To be assembled on site

| HCA1/4 | | 35 | 50 | 60 |
|---|---|---|---|---|
| Cassette unit for 4-pipe system with electronic control and remote control | **Body Code** | 0111318#030035 | 0111318#030050 | 0111318#030060 |
| | **Panel Code** | 0101325#18010 | 0101325#18010 | 0101325#18030 |
| | **Drip Tray Code** | Installed | Installed | Installed |
| | € | 1.347 | 1.454 | 1.916 |

| ACCESSORIES | | | | | |
|---|---|---|---|---|---|
| 2V4C* | 2-way, 4-pipe valve kit | code | 0119100016 | 0119100016 | - |
| | | € | 139 | 139 | - |
| 2V4CG* | 2-way 4-pipe valve kit (mandatory accessory) | code | - | - | 0119100022 |
| | | € | - | - | 121 |
| 3V4C* | 4-pipe 3-way valve kit | code | 0119100014 | 0119100014 | - |
| | | € | 197 | 197 | - |
| 3V4CG* | 4-pipe 3-way valve kit (mandatory accessory) | code | - | - | 0119100021 |
| | | € | - | - | 158 |
| WRC11 | Compact multifunction wired controller | code | 012108#010034 | | |
| | | € | 171 | | |
| WRC16 | Allows control of up to 16 indoor units by means of a single wired remote controller via the XYE terminals. | code | 012108#010095 | | |
| | | € | 211 | | |

* To be assembled on site

# HCN

## Low-profile ductable units with asynchronous AC or brushless DC motor

6 kW÷20 kW

- Self-supporting structure in galvanized sheet metal with thermal and acoustic insulation (S version) or double 20 mm sandwich panel with pre-painted external sheet metal in white RAL 9002 (D version); equipped with ceiling/wall mounting holes, compact dimensions and optimized overall footprint.
- Double-slope condensate collection tray.
- High-efficiency heat exchange coil with copper tubes and aluminum fins, standard connections on the right-hand side.
- Double inlet centrifugal fans with plastic impellers featuring forward-curved, airfoil blades of large diameter, mounted on elastic supports and vibration dampers.
- The unit is equipped with an IP20 "Mammut"-type terminal block mounted outside the unit.
- The ductable units of the HCN series are supplied without an air filter. A wide range of filters is available in the accessories section.

### Configurations

**S-OIP** Single recessed horizontal panel with rear return air intake

**S-OII** Single recessed horizontal panel with bottom return

**D-OIP** Double panel, horizontal recessed units with rear return air

**D-OII** Double panel, horizontal recessed units with bottom return

### Versions

- **S-OIP**: Single concealed horizontal unit, rear return panel
- **D-OIP**: Double panel, horizontal recessed units with rear return air intake
- **S-OII**: Single recessed horizontal panel with bottom return
- **D-OII**: Double panel, horizontal recessed units with bottom return air

Standard with connection on the left. When ordering, it is possible to request connections on the right side.

### Nomenclature

When ordering, always specify the full model as shown in the example below.

| HCN | – | S | – | OIP | – | 130 | – | DX |
|---|---|---|---|---|---|---|---|---|
| Series | | Load-bearing casing | | Version | | Size | | Connections |
| HCN | | S; D | | OIP-OII | | 60.....200 | | DX; SX |

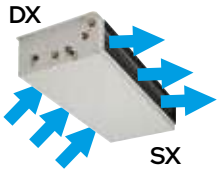


**HCN-S-OIP 130-DX**

For accessories, see the "HCN - HCNP Accessories" page.

| HCN | | | 60 | 75 | 86 | 103 | 130 | 136 | 150 | 170 | 200 |
|---|---|---|---|---|---|---|---|---|---|---|---|
| Cooling capacity (1) (*) | | W | 6.010 | 7.480 | 8.590 | 10.300 | 12.900 | 13.600 | 15.000 | 17.200 | 20.200 |
| Sensible capacity (1) (*) | | W | 4.570 | 5.560 | 6.160 | 8.100 | 9.950 | 10.800 | 11.100 | 13.300 | 14.900 |
| Thermal output (2) (*) | | W | 6.550 | 7.900 | 8.300 | 11.700 | 14.400 | 15.650 | 15.200 | 19.400 | 20.400 |
| Thermal output (3) (*) | | W | 13.100 | 15.800 | 16.600 | 23.400 | 28.800 | 31.300 | 30.400 | 38.800 | 40.800 |
| Air flow rate (4) | | m³/h | 1.100 | 1.200 | 1.150 | 2.100 | 2.300 | 2.800 | 2.200 | 3.100 | 2.950 |
| Sound pressure Min-Med-Max (5) | | dB(A) | 37-44-49 | 38-45-50 | 38-45-50 | 45-50-52 | 46-51-53 | 41-48-51 | 46-51-53 | 42-49-52 | 42-49-52 |
| Nominal electrical power input | | W | 200 | 200 | 200 | 340 | 340 | 340 | 320 | 320 | 320 |
| Rated current | | A | 0,9 | 0,9 | 0,9 | 1,65 | 1,65 | 1,65 | 1,50 | 1,50 | 1,50 |
| No. of motors / no. of fans | | | 1 / 1 | 1 / 1 | 1 / 1 | 1 / 2 | 1 / 2 | 1 / 2 | 1 / 3 | 1 / 3 | 1 / 3 |
| Maximum available static pressure | | Pa | 148 | 152 | 152 | 138 | 142 | 142 | 132 | 136 | 136 |
| Combined heating/ cooling coil hot/cold | no. of rows | no. | 3 | 3 | 4 | 3 | 3 | 4 | 3 | 3 | 4 |
| | hydraulic connection | Ø | 3/4" F | 3/4" F | 3/4" F | 3/4" F | 3/4" F | 3/4" F | 3/4" F | 3/4" F | 3/4" F |
| | water content | L | 1,95 | 1,96 | 2,60 | 2,86 | 2,87 | 3,82 | 3,75 | 3,76 | 4,99 |

**Heat outputs in 4-pipe version (HCN + BC)**

| HCN | | 60 | 75 | 86 | 103 | 130 | 136 | 150 | 170 | 200 |
|---|---|---|---|---|---|---|---|---|---|---|
| Cooling capacity (1) (*) | W | 5.830 | 7.220 | - | 9.960 | 12.400 | - | 13.200 | 16.600 | - |
| Sensible capacity (1) (*) | W | 4.220 | 5.350 | - | 7.830 | 9.530 | - | 10.400 | 12.800 | - |
| Heating capacity (3) | W | 6.610 | 6.970 | - | 11.600 | 12.200 | - | 15.500 | 16.400 | - |
| Air flow rate (4) | m³/h | 1.050 | 1.140 | - | 2.000 | 2.170 | - | 2.670 | 2.930 | - |
| Maximum available static pressure | Pa | 148 | 152 | - | 138 | 142 | - | 134 | 138 | - |

Note: Capacities and air flow rates refer to the version with AC motor, under conditions of 0 Pa available static pressure. For different available pressures, refer to the air flow variation diagrams.
(1) Inlet air temperature: 27°C d.b. / 19.5°C w.b.
Water inlet/outlet temperature: 7°C / 12°C
(2) Inlet air temperature: 20°C d.b.
Water inlet/outlet temperature: 45°C / 40°C
(3) Inlet air temperature: 20°C d.b.
Water inlet/outlet temperature: 70°C / 60°C
(4) Rated values measured with plenum chamber in accordance with AMCA 210-74 and duct plus orifice plate in accordance with CNR-UNI 10023 standards.
(5) In free field, distance 3 m. Values calculated from sound power measured in a reverberation room in accordance with standards ISO 3740 - ISO 3742.
(1)(2)(3)(4)(5) Nominal technical data referring to air flow rate (4) at maximum speed and unit with free discharge
(*) Maximum speed
DN = Nominal diameter; F = Female gas connections

## Dimensional Drawings

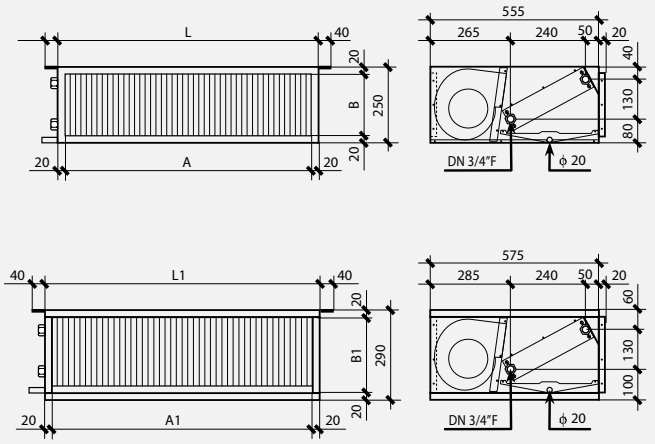


Auxiliary heating coil (for 4-pipe system)

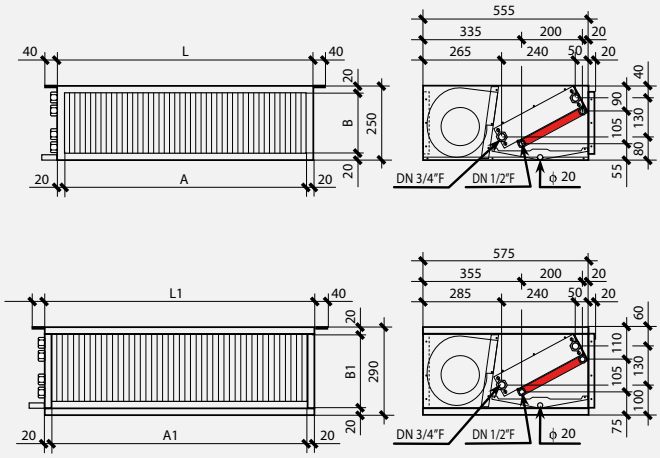


| HCN "S" Version | | | | | | | | | |
|---|---|---|---|---|---|---|---|---|---|
| | 60 | 75 | 86 | 103 | 130 | 150 | 136 | 170 | 200 |
| L | 800 | 800 | 800 | 1.200 | 1.200 | 1.200 | 1.600 | 1.600 | 1.600 |
| A | 760 | 760 | 760 | 1.160 | 1.160 | 1.160 | 1.560 | 1.560 | 1.560 |
| B | 210 | 210 | 210 | 210 | 210 | 210 | 210 | 210 | 210 |
| Kg | 34 | 35 | 37 | 48 | 50 | 53 | 63 | 65 | 68 |

| HCN Version "D" | | | | | | | | | |
|---|---|---|---|---|---|---|---|---|---|
| | 60 | 75 | 86 | 103 | 130 | 150 | 136 | 170 | 200 |
| L1 | 840 | 840 | 840 | 1.240 | 1.240 | 1.240 | 1.640 | 1.640 | 1.640 |
| A1 | 800 | 800 | 800 | 1.200 | 1.200 | 1.200 | 1.600 | 1.600 | 1.600 |
| B1 | 250 | 250 | 250 | 250 | 250 | 250 | 250 | 250 | 250 |
| Kg | 48 | 49 | 51 | 66 | 68 | 71 | 85 | 87 | 90 |

| HCN "S" Version – Hot Coil | | | | | | |
|---|---|---|---|---|---|---|
| | 60 | 75 | 103 | 130 | 136 | 170 |
| L | 800 | 800 | 1.200 | 1.200 | 1.600 | 1.600 |
| A | 760 | 760 | 1.160 | 1.160 | 1.560 | 1.560 |
| B | 210 | 210 | 210 | 210 | 210 | 210 |
| Kg | 36 | 37 | 51 | 53 | 67 | 69 |

| HCN "D" Version – Hot Coil | | | | | | |
|---|---|---|---|---|---|---|
| | 60 | 75 | 103 | 130 | 136 | 170 |
| L1 | 840 | 840 | 1.240 | 1.240 | 1.640 | 1.640 |
| A1 | 800 | 800 | 1.200 | 1.200 | 1.600 | 1.600 |
| B1 | 250 | 250 | 250 | 250 | 250 | 250 |
| Kg | 50 | 51 | 69 | 71 | 89 | 91 |

Dimensions in mm

# Price list

| HCN | | | 60 | 75 | 86 | 103 | 130 | 136 | 150 | 170 | 200 |
|---|---|---|---|---|---|---|---|---|---|---|---|
| S-OIP | Single horizontal recessed panel with rear return air intake + Mamut terminal block | € | 907 | 999 | 1.078 | 1.267 | 1.419 | 1.820 | 1.570 | 2.024 | 2.287 |
| D-OIP | Double recessed horizontal panel with rear return + Mamut terminal block | € | 1.137 | 1.230 | 1.310 | 1.661 | 1.757 | 2.168 | 1.861 | 2.373 | 2.635 |
| S-OII | Single horizontal recessed panel with bottom return + Mamut terminal block | € | 961 | 1.054 | 1.133 | 1.394 | 1.532 | 1.899 | 1.636 | 2.103 | 2.366 |
| D-OII | Double panel, horizontal recessed unit with bottom return air + Mamut terminal block | € | 1.192 | 1.283 | 1.364 | 1.727 | 1.927 | 2.450 | 2.246 | 2.714 | 2.972 |
| **FACTORY-MOUNTED ACCESSORIES** | | | | | | | | | | | |
| 2V–2.5 | No. 1 two-way valve for 2-pipe system with 230 V actuator | € | 201 | 201 | 201 | -- | -- | -- | -- | -- | -- |
| 2V-4 | No. 1 two-way valve for 2-pipe system with 230 V actuator | € | -- | -- | -- | 312 | 312 | -- | 312 | -- | -- |
| 2V-6 | No. 1 two-way valve for 2-pipe system with 230 V actuator | € | -- | -- | -- | -- | -- | 306 | -- | 306 | 306 |
| 3V-2.5 | No. 1 three-way valve for 2-pipe system with 230 V actuator | € | 240 | 240 | 240 | -- | -- | -- | -- | -- | -- |
| 3V-4 | No. 1 three-way valve for 2-pipe system with 230 V actuator | € | -- | -- | -- | 352 | 352 | -- | 352 | -- | -- |
| 3V-6 | No. 1 three-way valve for 2-pipe system with 230 V actuator | € | -- | -- | -- | -- | -- | 358 | -- | 358 | 358 |
| 3VC-2,5 | No. 1 three-way valve for heating coil (4-pipe system) with 230 V actuator | € | 192 | 192 | 192 | -- | -- | -- | -- | -- | -- |
| 3VC-4 | No. 1 three-way valve for heating coil (4-pipe system) with 230 V actuator | € | -- | -- | -- | 304 | 304 | -- | 304 | -- | -- |
| 3VC-6 | No. 1 three-way valve for heating coil (4-pipe system) with 230 V actuator | € | -- | -- | -- | -- | -- | 310 | -- | 310 | 310 |
| BC | Hot coil | € | 233 | 233 | -- | 401 | 295 | 392 | -- | 390 | -- |
| TMB | Minimum hot water temperature thermostat (WEEE €0.02) | € | 42 | 42 | 42 | 42 | 42 | 42 | 42 | 42 | 42 |
| SFA-S | Removable flat air filter (non-ductable) EU3, made of simple galvanized sheet metal. | € | 30 | 30 | 30 | 39 | 39 | 46 | 39 | 46 | 46 |
| SFA-D | Removable flat air filter (non-ductable) EU3 in double pre-painted panel | € | 32 | 32 | 32 | 41 | 41 | 49 | 41 | 49 | 49 |
| SFC-S | Ductable EU3 air filter section + flat air filter in plain galvanized sheet metal | € | 70 | 70 | 70 | 93 | 93 | 118 | 93 | 118 | 118 |
| SFC-D | Ductable EU3 filter section + double-deck precoated sheet air filter | € | 90 | 90 | 90 | 118 | 118 | 155 | 118 | 155 | 155 |
| MB | Brushless motor with continuous 0–100% air flow modulation (0–10 Vdc control signal). | € | 470 | 470 | 470 | 759 | 759 | 759 | 759 | 759 | 759 |

| HCN | | | 60 | 75 | 86 | 103 | 130 | 136 | 150 | 170 | 200 |
|---|---|---|---|---|---|---|---|---|---|---|---|
| **ACCESSORIES SUPPLIED SEPARATELY** | | | | | | | | | | | |
| CRA | 230V wall thermostat (WEEE €0.02) | € | 105 | 105 | 105 | 105 | 105 | 105 | 105 | 105 | 105 |
| MS | "230 Vac on/off" servomotor for air damper | € | 682 | 682 | 682 | 682 | 682 | 682 | 682 | 682 | 682 |
| PMP | Condensate pump equipped with 8A (250V) alarm contact | € | 341 | 341 | 341 | 341 | 341 | 341 | 341 | 341 | 341 |
| S2S-D | Closed section + 2 balancing/regulating dampers double pre-painted panel | € | 876 | 876 | 876 | 1.107 | 1.107 | 1.341 | 1.107 | 1.341 | 1.341 |
| S2S-S | Closed section + 2 balancing/adjustment dampers (1 lower + 1 rear), simple galvanized sheet metal | € | 735 | 735 | 735 | 928 | 928 | 1.124 | 928 | 1.124 | 1.124 |
| SBC-O | Auxiliary condensate drip tray + thermal insulation | € | 33 | 33 | 33 | 33 | 33 | 33 | 33 | 33 | 33 |
| SCM-D | Double galvanized sheet metal section | € | 336 | 336 | 336 | 466 | 466 | 560 | 466 | 560 | 560 |
| SCM-S | Sheet metal section with circular connections, plain galvanized sheet steel | € | 220 | 220 | 220 | 327 | 327 | 394 | 327 | 394 | 394 |
| SDI.2X10A | Board with 2 outputs rated at 10A | € | 269 | 269 | 269 | 269 | 269 | 269 | 269 | 269 | 269 |
| SDI.4X3A | Board with 4 outputs rated at 3A | € | 274 | 274 | 274 | 274 | 274 | 274 | 274 | 274 | 274 |
| SFD-S | Ductable EU5 air filter section + HIGH-EFFICIENCY corrugated air filter H = 100 mm, simple galvanized sheet metal construction | € | 107 | 107 | 107 | 138 | 138 | 157 | 138 | 158 | 158 |
| SFD-D | EU5 ductable air filter section + corrugated air filter H=100 mm HIGH-EFFICIENCY double pre-painted panel | € | 152 | 152 | 152 | 193 | 193 | 221 | 193 | 221 | 221 |
| SSL-D | Double labyrinth silencer section in pre-painted double-skin panel | € | 516 | 516 | 516 | 662 | 662 | 812 | 662 | 812 | 812 |
| SSL-S | Single-labyrinth silencer section in galvanized sheet metal | € | 315 | 315 | 315 | 410 | 410 | 503 | 410 | 503 | 503 |
| SSM-D | Mixed outdoor-indoor air section or vice versa double pre-painted panel | € | 507 | 507 | 507 | 660 | 660 | 816 | 660 | 816 | 816 |
| SSM-S | Outdoor/indoor air mixing section, or vice versa, in plain galvanized sheet metal | € | 338 | 338 | 338 | 445 | 445 | 539 | 445 | 539 | 539 |
| TEL | Remote control system | code | 011996#0060290 | | | | | | | | |
| | | € | 320 | 320 | 320 | 320 | 320 | 320 | 320 | 320 | 320 |

For the remote controller price lists, refer to the pages at the beginning of the chapter.

# HCNP

## Enhanced low-profile/flat ductable units with asynchronous AC or brushless DC motor

6.8 kW÷12 kW

- Self-supporting structure in galvanized sheet metal with thermal and acoustic insulation (S version) or double 20 mm sandwich panel with pre-painted external sheet metal in white RAL 9002 (D version); equipped with ceiling/wall mounting holes, compact dimensions and optimized overall footprint.
- Double-slope condensate collection tray.
- High-efficiency heat exchange coil with copper tubes and aluminum fins, standard connections on the right-hand side.
- In the HCNP series, the double-inlet centrifugal fans with large-diameter plastic impellers featuring forward-curved, airfoil blades, mounted on elastic supports and vibration dampers, are equipped with higher-power motors to ensure higher available static pressures.
- The unit is equipped with an IP20 "Mammut"-type terminal block mounted outside the unit.
- The ductable units of the HCNP series are supplied without an air filter. A wide range of filters is available in the accessories section.

### Configurations

**S-OIP** Single recessed horizontal panel with rear return air intake

**S-OII** Single recessed horizontal panel with bottom return

**D-OIP** Double panel, horizontal recessed units with rear return air

**D-OII** Double panel, horizontal recessed units with bottom return

### Versions

- **S-OIP**: Single concealed horizontal unit, rear return panel
- **D-OIP**: Double panel, horizontal recessed units with rear return air intake
- **S-OII**: Single recessed horizontal panel with bottom return
- **D-OII**: Double panel, horizontal recessed units with bottom return air

Standard with connection on the left. When ordering, it is possible to request connections on the right side.

**Nomenclature**

When ordering, always specify the full model as shown in the example below.

| HCNP | – | S | – | OIP | – | 120 | – | DX |
|---|---|---|---|---|---|---|---|---|
| Series | | Load-bearing casing | | Version | | Size | | Connections |
| HCNP | | S; D | | OIP-OII | | 60.....120 | | DX; SX |

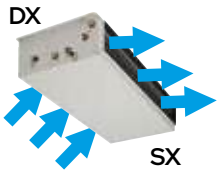


**HCNP-S-OIP 120-DX**

# HCN, HCNP accessories

## Factory-installed

**TEL**

System for remote control management. Main board + Air sensor + Water sensor + IR receiver + Remote control (management of 2/4-pipe systems, with/without valves). Fan: 7A-230Vac. Valves: 2A-230Vac.

**BC**

Auxiliary heating coil (for 4-pipe system)

**MOR TMB**

"Mammut"-type terminal block + minimum hot water temperature thermostat. Tset 32°C. All HCN units are supplied complete with a standard "Mammut"-type terminal block, without thermostat.

**SFA-S SFA-D**

Removable flat air filter (non-ductable) EU3 (S = single galvanized sheet metal, D = double pre-painted panel)

**SND W4**

Water temperature probe (NTC type 4700 Ohm@25°C) with adjustable minimum setpoint, 1 m cable length. Alternative to TMB thermostat.

**SFC-S SFC-D**

EU3 ductable air filter section + flat air filter (S = single galvanized sheet metal, D = double pre-painted panel)

**MB**

Brushless motor with continuous 0–100% air flow modulation (0–10 Vdc control signal).

**3VC-2,5 3VC-4 3VC-6**

No. 1 three-way valve for heating coil (4-pipe system) with 230 V actuator

**3V-2.5 3V-4 3V-6**

No. 1 three-way valve for 2-pipe system with 230 V actuator

**2VC-2,5 2VC-4 2VC-6**

No. 1 two-way valve for heating coil (4-pipe system) with 230V actuator

**2V-2.5 2V-4 2V-6**

No. 1 two-way valve for 2-pipe system with 230 V actuator

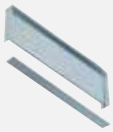

**SFD-S SFD-D**

Ductable EU5 air filter section + corrugated HIGH-EFFICIENCY air filter H=100 mm (S=single galvanized sheet metal, D=double pre-painted panel)

Air pressure drop (clean/dirty filter)

| HCN | 60 | 75 | 86 | 103 | 130 | 150 | 136 | 170 | 200 |
|---|---|---|---|---|---|---|---|---|---|
| SFA (Pa) | 15/35 | 17/42 | 16/38 | 23/55 | 27/66 | 25/60 | 22/54 | 28/66 | 25/60 |
| SFC (Pa) | 15/35 | 17/42 | 16/38 | 23/55 | 27/66 | 25/60 | 22/54 | 28/66 | 25/60 |
| SFD (Pa) | 20/37 | 24/44 | 22/41 | 32/59 | 38/70 | 35/64 | 31/58 | 39/71 | 35/64 |

Note: each individual kit includes only one valve with actuator. In the case of a 4-pipe system, 2 valves are required. Example: with a 4-pipe ducted unit, in the case of 3-way valves, 230 V power supply: 3V + 3VC.

| Features of 3-way / 2-way valves - RECOMMENDED COMBINATIONS | | | | | | | | | |
|---|---|---|---|---|---|---|---|---|---|
| HCN | 60 | 75 | 86 | 103 | 130 | 150 | 136 | 170 | 200 |
| Characteristic valve | Kvs 2,5 | | | Kvs 4 | | | Kvs 6 | | |
| User-side connections | DN 3/4" M | | | | | | | | |
| Nominal pressure | PN 16 bar | | | | | | | | |

# HCN, HCNP accessories

## Provided separately

**PMP**

Condensate pump equipped with 8A (250V) alarm contact

**MS**

"230 Vac on/off" servomotor for air damper

**SDI.4X3A**

Board with 4 outputs at 3A (suitable for controlling up to 4 three-speed motors at 3A; e.g. 4 small fan coils).

**SDI.2X10A**

Board with 2 x 10A outputs (suitable for controlling up to 2 three-speed 10A motors; e.g. 1 large unit with 2 motors).

**S2S-S**
**S2S-D**

Closed section + 2 balancing/adjustment dampers (1 lower + 1 rear) – dampers without actuators, prepared for manual control or motorization (S = single galvanized steel sheet, D = double pre-painted panel)

**SSL-S**
**SSL-D**

Labyrinth silencer section (for air intake and/or supply)
(S=single galvanized sheet metal, D=double pre-painted panel)

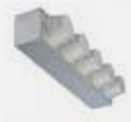

**Scm-S**
**Scm-D**

Sheet metal section with circular connections, variable "Ø", made of plastic material
(S=single galvanized sheet metal, D=double pre-painted panel)

| No. and Ø of circular connections | | | | | | | | | |
|---|---|---|---|---|---|---|---|---|---|
| HCN | 60 | 75 | 86 | 103 | 130 | 150 | 136 | 170 | 200 |
| SCM no. x Ø | 3xØ200/180/160 | | | 5xØ200/180/160 | | | 6xØ200/180/160 | | |

**SSM-S**
**SSM-D**

Outdoor air (0–33%) / return air (100–67%) mixing section, or vice versa (interlocked dampers with manual controls, prepared for motorization)
(S=single galvanized sheet metal, D=double pre-painted panel)

| Air pressure drops | | | | | | | | | |
|---|---|---|---|---|---|---|---|---|---|
| HCN | 60 | 75 | 86 | 103 | 130 | 150 | 136 | 170 | 200 |
| SSM (Pa) | 13 | 15 | 14 | 20 | 24 | 22 | 20 | 24 | 22 |
| S2S (Pa) | 15 | 17 | 16 | 23 | 27 | 25 | 22 | 28 | 25 |

**SBC-O**

Auxiliary galvanized steel condensate collection tray with thermal insulation

| | | | 68 | 86 | 101 | 120 |
|---|---|---|---|---|---|---|
| | Cooling capacity (1) (*) | W | 6.820 | 8.650 | 10.100 | 12.000 |
| | Sensible capacity (1) (*) | W | 5.300 | 6.580 | 7.380 | 9.780 |
| | Thermal output (2) (*) | W | 7.600 | 9.450 | 10.000 | 14.200 |
| | Thermal output (3) (*) | W | 15.200 | 18.900 | 20.000 | 28.400 |
| | Air flow rate (4) | m³/h | 1.350 | 1.500 | 1.450 | 2.750 |
| | Sound pressure Min-Mid-Max (7) | dB(A) | 34-43-49 | 35-44-50 | 35-44-50 | 37-48-51 |
| | Nominal electrical power input | W | 270 | 270 | 270 | 570 |
| | Rated current | A | 1,25 | 1,25 | 1,25 | 2,70 |
| | No. of motors / no. of fans | | 1/1 | 1/1 | 1/1 | 1/2 |
| **HCNP** | Maximum available static pressure | Pa | 184 | 194 | 194 | 182 |
| | Combined heating/cooling coil | | | | | |
| | No. of rows | no. | 3 | 3 | 4 | 3 |
| | Hydraulic connection | Ø | 3/4" F | 3/4" F | 3/4" F | 3/4" F |
| | Water content | L | 1,95 | 1,95 | 2,60 | 2,86 |
| | Heating and cooling outputs in 4-pipe configuration (HCNP + BC) | | | | | |
| | Cooling capacity (1) (*) | W | 6.570 | 8.280 | 11.500 | 14.600 |
| | Sensible capacity (1) (*) | W | 5.070 | 6.250 | 9.330 | 11.500 |
| | Heating capacity (3) | W | 12.100 | 12.900 | 22.300 | 23.600 |
| | Air flow rate (4) | m³/h | 1.270 | 1.400 | 2.570 | 2.800 |
| | Maximum available static pressure | Pa | 186 | 196 | 184 | 192 |

Note: Capacities and air flow rates refer to the version with AC motor, under conditions of 0 Pa available static pressure. For different available pressures, refer to the air flow variation diagrams.
(1) Inlet air temperature: 27°C d.b. / 19.5°C w.b.
Water inlet/outlet temperature: 7°C / 12°C
(2) Inlet air temperature: 20°C d.b.
Water inlet/outlet temperature: 45°C / 40°C
(3) Inlet air temperature: 20°C d.b.
Water inlet/outlet temperature: 70°C / 60°C
(4) Rated values measured with plenum chamber in accordance with AMCA 210-74 and duct plus orifice plate in accordance with CNR-UNI 10023 standards.
(7) In free field, distance 3 m. Values calculated from sound power measured in a reverberation chamber in accordance with ISO 3740 - ISO 3742.
(1)(2)(3)(4)(5)(6) Nominal technical data referring to air flow rate (4) at maximum speed and unit with free discharge
(*) Maximum speed
DN = Nominal diameter; F = Female gas connections

## Dimensional Drawings

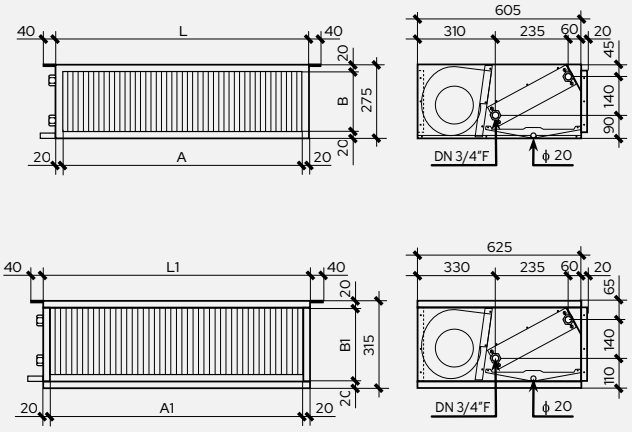


Auxiliary heating coil (for 4-pipe system)

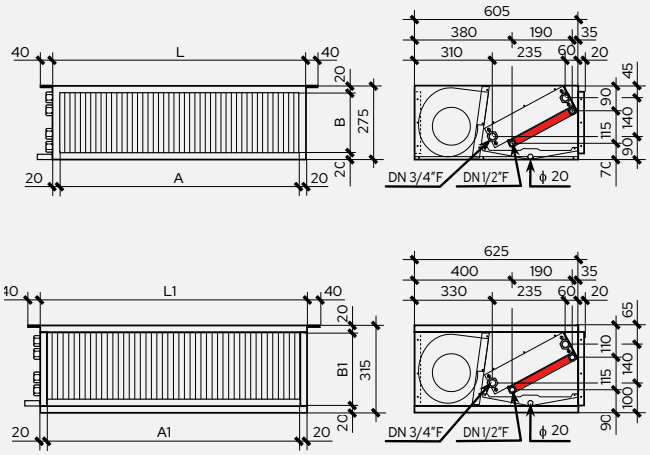


| HCNP "S" Version | | | | |
|---|---|---|---|---|
| | 68 | 86 | 101 | 120 |
| L | 800 | 800 | 800 | 1.200 |
| A | 760 | 760 | 760 | 1.160 |
| B | 235 | 235 | 235 | 235 |

| HCNP "D" Version | | | | |
|---|---|---|---|---|
| | 68 | 86 | 101 | 120 |
| L1 | 840 | 840 | 840 | 1.240 |
| A1 | 800 | 800 | 800 | 1.200 |
| B1 | 275 | 275 | 275 | 275 |

| HCNP "S" Version - Hot Coil | | | | |
|---|---|---|---|---|
| | 68 | 86 | 101 | 120 |
| L | 800 | 800 | 800 | 1.200 |
| A | 760 | 760 | 760 | 1.160 |
| B | 235 | 235 | 235 | 235 |

| HCNP "D" Version – Hot Coil | | | | |
|---|---|---|---|---|
| | 68 | 86 | 101 | 120 |
| L1 | 840 | 840 | 840 | 1.240 |
| A1 | 800 | 800 | 800 | 1.200 |
| B1 | 275 | 275 | 275 | 275 |

Dimensions in mm

# Price list

| HCNP | | | 68 | 86 | 101 | 120 |
|---|---|---|---|---|---|---|
| S-OIP | Single recessed horizontal panel with rear return + Mamut terminal block | € | 1.127 | 1.224 | 1.306 | 1.643 |
| D-OIP | Double recessed horizontal panel with rear return + Mamut terminal block | € | 1.393 | 1.488 | 1.572 | 1.979 |
| S-OII | Single horizontal recessed panel with bottom return + Mamut terminal block | € | 1.188 | 1.285 | 1.369 | 1.719 |
| D-OII | Double panel, horizontal recessed unit with bottom return air + Mamut terminal block | € | 1.454 | 1.551 | 1.635 | 2.053 |

| FACTORY-MOUNTED ACCESSORIES | | | | | | |
|---|---|---|---|---|---|---|
| 2V–2.5 | No. 1 two-way valve for 2-pipe system with 230 V actuator | € | 201 | 201 | - | - |
| 2V-4 | No. 1 two-way valve for 2-pipe system with 230 V actuator | € | - | - | 312 | 312 |
| 2V-6 | No. 1 two-way valve for 2-pipe system with 230 V actuator | € | - | - | - | - |
| 3V-2.5 | No. 1 three-way valve for 2-pipe system with 230 V actuator | € | 240 | 240 | - | - |
| 3V-4 | No. 1 three-way valve for 2-pipe system with 230 V actuator | € | - | - | 354 | 352 |
| 3V-6 | No. 1 three-way valve for 2-pipe system with 230 V actuator | € | - | - | - | - |
| 3VC-2,5 | No. 1 three-way valve for heating coil (4-pipe system) with 230 V actuator | € | 192 | 192 | - | - |
| 3VC-4 | No. 1 three-way valve for heating coil (4-pipe system) with 230 V actuator | € | - | - | 305 | 305 |
| 3VC-6 | No. 1 three-way valve for heating coil (4-pipe system) with 230 V actuator | € | - | - | - | - |
| BC | Hot coil | € | 248 | 248 | - | 314 |
| MB | Brushless motor with stepless 0–100% airflow modulation (0–10 Vdc signal) | € | 01100425#0906011<br>303 | 01100425#0906011<br>303 | 01100425#0906011<br>303 | 01100425#0906012<br>512 |
| TMB | Hot water minimum temperature thermostat | € | 42 | 42 | 42 | 42 |
| SFA-S | Removable flat air filter (non-ductable) EU3, made of simple galvanized sheet metal. | € | 36 | 36 | 36 | 45 |
| SFA-D | Removable flat air filter (non-ductable) EU3 in double pre-painted panel | € | 39 | 39 | 39 | 49 |
| SFC-S | Ductable EU3 air filter section + flat air filter in plain galvanized sheet metal | € | 84 | 84 | 84 | 110 |
| SFC-D | Ductable EU3 filter section + double-deck precoated sheet air filter | € | 105 | 105 | 105 | 140 |
| **ACCESSORIES SUPPLIED SEPARATELY** | | | | | | |
| MS | "230 Vac on/off" servomotor for air damper | € | 682 | 682 | 682 | 682 |
| PMP | Condensate pump equipped with 8A (250V) alarm contact | € | 420 | 420 | 420 | 420 |
| S2S-D | Closed section + 2 balancing/regulation dampers double pre-painted panel | € | 992 | 992 | 992 | 1.252 |
| S2S-S | Closed section + 2 balancing/adjustment dampers (1 lower + 1 rear), simple galvanized sheet metal | € | 830 | 830 | 830 | 1.050 |
| SBC-O | Auxiliary condensate drip tray + thermal insulation | € | 39 | 39 | 39 | 39 |
| SCM-D | Double galvanized sheet metal section | € | 383 | 383 | 383 | 531 |
| SCM-S | Sheet metal section with circular connections, plain galvanized sheet steel | € | 258 | 258 | 258 | 374 |
| SDI.2X10A | Board with 2 outputs rated at 10A | € | 269 | 269 | 269 | 269 |
| SDI.4X3A | Board with 4 outputs rated at 3A | € | 274 | 274 | 274 | 274 |
| SFD-S | Ductable EU5 air filter section + HIGH-EFFICIENCY corrugated air filter H = 100 mm, simple galvanized sheet metal construction | € | 127 | 127 | 127 | 157 |
| SFD-D | EU5 ductable air filter section + corrugated air filter H=100 mm HIGH-EFFICIENCY double pre-painted panel | € | 174 | 174 | 174 | 220 |
| SSL-D | Double labyrinth silencer section in pre-painted double-skin panel | € | 589 | 589 | 589 | 755 |
| SSL-S | Single-labyrinth silencer section in galvanized sheet metal | € | 358 | 358 | 358 | 467 |
| SSM-D | Outdoor-indoor (or vice versa) air mixing section with double pre-painted panel | € | 579 | 579 | 579 | 752 |
| SSM-S | Outdoor/indoor air mixing section, or vice versa, in plain galvanized sheet metal | € | 383 | 383 | 383 | 507 |
| TEL | Remote control system | code | 011996#0060290 | | | |
| | | € | 320 | 320 | 320 | 320 |

For the remote controller price lists, refer to the pages at the beginning of the chapter.

# HCNA

## Medium ductable units with AC asynchronous or DC brushless motor

7 kW÷68 kW

HCNA units are compact, freely configurable air handling units. You can choose from: 2 motor options (6-pole or brushless), 2 types of load-bearing casings (S or D), the 2-pipe/4-pipe version, and a wide range of compatible accessories.
The high flexibility, together with the wide output range, makes HCNA the winning solution that always allows you to find the right configuration for your specific needs.

### Construction Features

- Load-bearing structure in heavy-gauge galvanized sheet metal, resistant to rust, corrosion, chemicals, solvents, aliphatics, and alcohols.
- Self-supporting, removable panels; assembled with self-tapping screws for quick and easy inspection/maintenance. Load-bearing casings are available in "S" version (single panel) and "D" version (20 mm double sandwich panel with pre-painted outer sheet, white RAL 9002).
- The units are equipped with high-efficiency heat exchange coils (without air vent valves) made of copper tubes and aluminum fins.
- Standard connections on the right; on request and at an additional cost, connections on the left.
- The sections with cooling coil are equipped with a galvanized steel condensate drain pan with external thermal insulation (on request, at extra cost, in AISI 304 stainless steel) with single slope to ensure optimal condensate drainage, complete with Ø30 mm drain connection.
- The standard electrical equipment includes: "Mammut"-type IP20 terminal blocks, with the terminal block mounted outside the unit on the same side as the hydraulic connections. For units with 2 motors, the installation of 3 relays or of the interface board is recommended.
- All standard versions are supplied with free intake and discharge openings, without any grille/guard and without an air filter.
- No. 2 motor drives: 6-pole or brushless

### Versions

- **S**: Recessed version - Single panel
- **D**: Exposed version - Double panel

Standard with connection on the left. When ordering, it is possible to request connections on the right side.

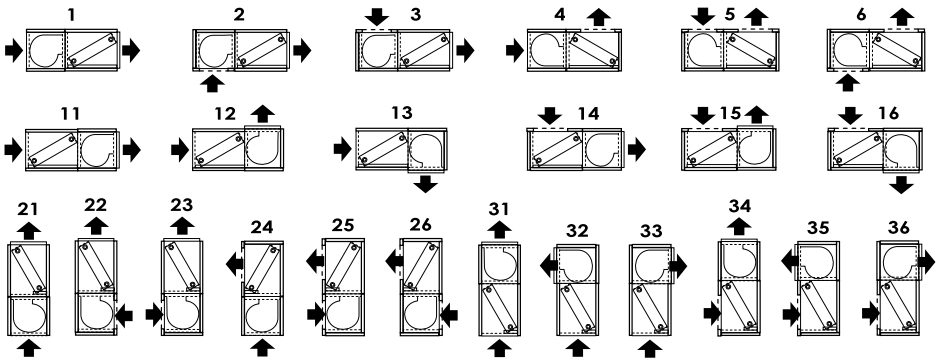

# Accessories

## Provided separately

**MOR-TMB**

"Mammut"-type terminal block + minimum hot water temperature thermostat. Tset 32°C. All HCN units are supplied complete with a standard "Mammut"-type terminal block, without thermostat.

**PMP**

Condensate pump with integrated 0.5 L tank, equipped with 4A (250V) alarm contact

**SDI.4X3A**

Board with 4 outputs at 3A (suitable for controlling up to 4 three-speed motors at 3A; e.g. 4 small fan coils).

**SDI.2X10A**

Board with 2 x 10A outputs (suitable for controlling up to 2 three-speed 10A motors; e.g. 1 large unit with 2 motors).

**PFT-S**
**PFT-D**

Ductable air filter section + EU7 pocket air filter, H = 400 mm. VERY HIGH EFFICIENCY (S = single galvanized sheet metal, D = double pre-painted panel)

**P2S-S**
**P2S-D**

Closed section + 2 balancing/ adjustment dampers (1 lower and 1 rear). Dampers without actuators, prepared for manual control or motorization. (S = single galvanized sheet metal, D = double pre-painted panel)

**PMA-S**
**PMA-D**

Outdoor air (0–33%) / return air (100–67%) mixing section (S=single galvanized sheet metal, D=double pre-painted panel)

**MS**

"230 Vac on/off" servomotor for air damper

**P90-S**
**P90-D**

90° Section (S = single galvanized sheet metal, D = double pre-painted panel)

**PCR-S**
**PCR-D**

Sheet metal section with circular "Ø" connections, internally insulated (S = single galvanized sheet metal, D = double pre-painted panel)

**PSL-S**
**PSL-D**

Labyrinth silencer section, suitable for both intake and supply air openings (S = single galvanized sheet metal, D = double pre-painted panel).

## Coil characteristics

| | HCNA | 71 | 117 | 143 | 165 | 216 | 290 | 240 | 293 | 330 | 565 | 685 |
|---|---|---|---|---|---|---|---|---|---|---|---|---|
| Coil hot/cold | Kvs characteristic | 2,33 | 3,78 | 4,58 | 5,65 | 6,65 | 9,00 | 8,22 | 9,91 | 11,04 | 16,36 | 19,73 |
| | User-side connections DN | 3/4"M | 1"M | 1"M | 1"M | 1"-1/4M | 1"-1/2M | 1"-1/4M | 1"-1/2M | 1"-1/2M | 1"-1/2M (4R) | 1"-1/2M (4R) |
| Hot coil | Kvs characteristic | 1,66 | 2,56 | 3,23 | 3,94 | 4,64 | 6,46 | 5,73 | 7,14 | 7,98 | 9,67 | 11,53 |
| | User-side connections DN | 3/4"M | 1"M | 1"M | 1"M | 1"-1/4M | 1"-1/4M | 1"-1/4M | 1"-1/4M | 1"-1/4M | 1"-1/4M | 1"-1/4M |

## Valve features

| | | | | |
|---|---|---|---|---|
| 3-way valve | (1) Each individual kit includes only one control valve. | | | |
| 3V / 3VM | DN 3/4" Kvs 2,8 | DN 1" Kvs 5,2 | DN 1 1/4" Kvs 13,0 | DN 1 1/2" Kvs 16,0 |
| 2-way valve | (1) Each individual kit includes only one control valve. | | | |
| 2V / 2VM | DN 3/4" Kvs 2,8 | DN 1" Kvs 5,2 | DN 1 1/4" Kvs 13,0 | DN 1 1/2" Kvs 16,0 |

(1) Each individual valve kit is compatible with any size of HCNA unit.
For on-off valves, it is recommended to use valves with a high Kvs value – for modulating valves, it is recommended to use valves with a Kvs value comparable to the Kvs of the coil.

The heating coil of the HCNA units (4-pipe system) uses the same type of valves.
Therefore, in a 4-pipe system, 2 valves (2 codes) must be provided.

# Accessories

## Factory-installed

**BC**

Auxiliary hot coil, 2 rows

**TEL**

System for remote control management. Main board + Air sensor + Water sensor + IR receiver + Remote control (management of 2/4-pipe systems, with/without valves). Fan: 7A-230Vac. Valves: 2A-230Vac.

**3V-2.8**
**3V-5.2**
**3V-13**
**3V-16**

No. 1 three-way valve with 230V actuator

**MB**

Brushless motor with continuous 0–100% air flow modulation (0–10 Vdc control signal).

**PFA-S**
**PFA-D**

Ductable air filter section + EU3 flat air filter (S = single galvanized sheet metal, D = double pre-painted panel)

**PFO-S**
**PFO-D**

Ductable air filter section + corrugated EU5 air filter, H = 100 mm, HIGH EFFICIENCY (S = single galvanized sheet metal, D = double pre-painted panel)

**2V-2.8**
**2V-5.2**
**2V-13**
**2V-16**

No. 1 two-way valve with 230V actuator

| | **HCNA** | | **71** | **117** | **143** | **165** | **216** (7) | **290**(7) | **240**(7) | **293**(7) | **330**(7) | **565**(7) | **685**(7) |
|---|---|---|---|---|---|---|---|---|---|---|---|---|---|
| **HCNA** | Cooling capacity (1) | kW | 7,3 | 11,7 | 14,6 | 17,0 | 22,2 | 29,8 | 24,1 | 30,1 | 34,0 | 58,1 | 70,1 |
| | Sensible output (1) | kW | 5,9 | 9,8 | 12,0 | 14,0 | 18,3 | 24,3 | 20,2 | 24,6 | 28,1 | 44,5 | 55,4 |
| | Thermal power (2) | kW | 17,2 | 28,3 | 34,9 | 40,7 | 52,9 | 69,9 | 58,8 | 71,2 | 80,9 | 125,7 | 157,2 |
| | Heating capacity (3) | W | 8.350 | 14.100 | 17.000 | 19.700 | 25.650 | 34.100 | 29.300 | 34.600 | 39.150 | 60.950 | 76.650 |
| | Airflow rate (3) | m³/h | 1500 | 2500 | 3000 | 3500 | 5000 | 6000 | 5000 | 6000 | 7000 | 10000 | 12000 |
| | Water flow rate (4) | | | | | | | | | | | | |
| | Cooling | l/h | 1256 | 2012 | 2511 | 2924 | 3818 | 5126 | 4145 | 5177 | 5848 | 9993 | 12057 |
| | Heating | l/h | 1479 | 2434 | 3001 | 3500 | 4549 | 6011 | 5057 | 6123 | 6957 | 10810 | 13519 |
| | Water pressure drops (4) | | | | | | | | | | | | |
| | Cooling | kPa | 27,7 | 27,3 | 29,7 | 27,5 | 28,1 | 32,8 | 25,7 | 27,4 | 29,0 | 32,4 | 35,0 |
| | Heating | kPa | 30,0 | 31,1 | 33,1 | 30,7 | 31,0 | 35,2 | 30,1 | 30,0 | 32,0 | 29,6 | 34,3 |
| | Sound pressure (5) | | | | | | | | | | | | |
| | Min-Med-Max | dB(A) | 35-41-46 | 42-48-54 | 40-45-54 | 43-47-53 | 48-52-58 | 47-51-57 | 45-51-57 | 43-48-57 | 46-50-56 | 51-55-61 | 50-54-60 |
| | Motors/Fans | n°/n° | 1/1 | 1/1 | 1/1 | 1/1 | 1/1 | 1/1 | 2/2 | 2/2 | 2/2 | 2/2 | 2/2 |
| | Absorbed current | A | 1x2,4 | 1x5,0 | 1x5,0 | 1x7,0 | 1x7,2 | 1x9 | 2x5 | 2x5 | 2x7 | 2x7,2 | 2x9 |
| | Power supply | | 230Vac - 1 Ph - 50Hz | | | | | | | | | | |
| | Poles | no. | 4 | | | | | | | | | | |
| | Coil/Rows | no. | 3R | 3R | 3R | 3R | 3R | 3R | 3R | 3R | 3R | 4R | 4R |
| | Hydraulic connections | Ø | 3/4"M | 1"M | 1"M | 1"M | 1"1/4 M | 1"1/4 M | 1"1/4 M | 1"1/4 M | 1"1/4 M | 1"1/4 M | 1"1/4 M |
| | Condensate drain | Ø mm | 30 | 30 | 30 | 30 | 30 | 30 | 30 | 30 | 30 | 30 | 30 |
| **HCNA Hot Coil** | **HCNA** | | **71** | **117** | **143** | **165** | **216** (7) | **290**(7) | **240**(7) | **293**(7) | **330**(7) | **565**(7) | **685**(7) |
| | Thermal power (2) | W | 13,3 | 21,7 | 27,3 | 31,7 | 40,4 | 54,5 | 44,8 | 55,3 | 62,4 | 85,2 | 103,1 |
| | Water flow rate (5) | | | | | | | | | | | | |
| | Heating | l/h | 1144 | 1866 | 2348 | 2726 | 3474 | 4687 | 3853 | 4756 | 5366 | 7327 | 8867 |
| | Water pressure drops (5) | | | | | | | | | | | | |
| | Heating | kPa | 35,1 | 36,3 | 37,7 | 38,6 | 40,4 | 37,3 | 37,7 | 34,7 | 37,1 | 37 | 40,2 |
| | Coil/Rows | no. | 2R | 2R | 2R | 2R | 2R | 2R | 2R | 2R | 2R | 2R | 2R |
| | Hydraulic connections | Ø | 3/4"M | 1"M | 1"M | 1"M | 1"1/4 M | 1"1/4 M | 1"1/4 M | 1"1/4 M | 1"1/4 M | 1"1/4 M | 1"1/4 M |

(1) Inlet air temperature: 27°C d.b. / 19°C w.b. – inlet/outlet water temperature: 7°C / 12°C Maximum speed
(2) Inlet air temp.: 20°C d.b. - Inlet/outlet water temp.: 70°C / 60°C Max speed
(3) Inlet air temp.: 20°C d.b. – inlet/outlet water temperature: 45°C / 40°C Max speed
(4) Rated values measured with plenum chamber in accordance with AMCA 210-74 and duct plus orifice plate in accordance with CNR-UNI 10023 standards.
(6) In free field, at a distance of 3 m. Values calculated from sound power measured in a reverberation room in accordance with ISO 3740 - ISO 3742.
(7) With AIRMUST 3VA1 and CRA accessories. For units equipped with a motor with electrical absorption greater than 3A, or with 2 motors, add 1 SDI.2x10A interface board.
(1)(2)(3)(4)(5) Nominal technical data referring to air flow rate (4) at maximum speed and unit with free discharge
(*) DN = Nominal diameter; F = Female gas connections

# Dimensional Drawings

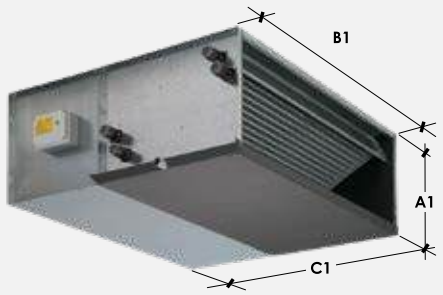


S: Recessed version – Single panel

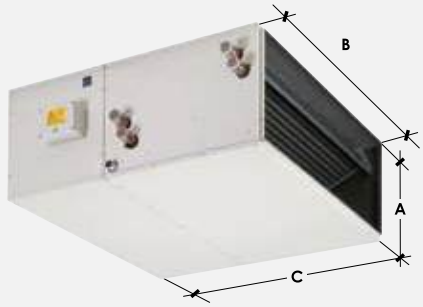


D: Exposed version – Double panel

| HCNA "S" Version | | | | | | | | | | | |
|---|---|---|---|---|---|---|---|---|---|---|---|
| | 71 | 117 | 143 | 165 | 216 | 290 | 240 | 293 | 330 | 565 | 685 |
| A1 | 360 | 425 | 425 | 480 | 550 | 550 | 425 | 425 | 480 | 580 | 580 |
| B1 | 560 | 660 | 760 | 760 | 1.160 | 1.360 | 1.160 | 1.360 | 1.360 | 1.660 | 1.660 |
| C1 | 840 | 995 | 1.105 | 1.160 | 1.140 | 1.240 | 995 | 1.105 | 1.160 | 1.450 | 1.450 |
| Kg | 35,8 | 46,6 | 55,7 | 60,6 | 93,7 | 107,8 | 78,5 | 94,8 | 103,5 | 179,1 | 181,1 |

| HCNA "D" Version | | | | | | | | | | | |
|---|---|---|---|---|---|---|---|---|---|---|---|
| | 71 | 117 | 143 | 165 | 216 | 290 | 240 | 293 | 330 | 565 | 685 |
| A | 380 | 440 | 440 | 480 | 570 | 570 | 440 | 440 | 480 | 600 | 600 |
| B | 520 | 620 | 720 | 720 | 1.120 | 1.320 | 1.120 | 1.320 | 1.320 | 1.620 | 1.620 |
| C | 870 | 1.020 | 1.120 | 1.160 | 1.150 | 1.250 | 1.020 | 1.120 | 1.160 | 1.470 | 1.470 |
| Kg | 45,1 | 59,5 | 71,3 | 77,3 | 118,9 | 138,7 | 99,7 | 121,4 | 131,4 | 224,4 | 226,4 |

| HCNA "S" Version - with hot coil | | | | | | | | | | | |
|---|---|---|---|---|---|---|---|---|---|---|---|
| | 71 | 117 | 143 | 165 | 216 | 290 | 240 | 293 | 330 | 565 | 685 |
| A1 | 360 | 425 | 425 | 480 | 550 | 550 | 425 | 425 | 480 | 580 | 580 |
| B1 | 560 | 660 | 760 | 760 | 1.160 | 1.360 | 1.160 | 1.360 | 1.360 | 1.660 | 1.660 |
| C1 | 840 | 995 | 1.105 | 1.160 | 1.140 | 1.240 | 995 | 1.105 | 1.160 | 1.450 | 1.450 |
| Kg | 40,2 | 52,1 | 62,3 | 67,2 | 104,7 | 123,8 | 89,5 | 110,8 | 119,5 | 203,1 | 205,1 |

| HCNA Version "D" - with hot coil | | | | | | | | | | | |
|---|---|---|---|---|---|---|---|---|---|---|---|
| | 71 | 117 | 143 | 165 | 216 | 290 | 240 | 293 | 330 | 565 | 685 |
| A | 380 | 440 | 440 | 480 | 570 | 570 | 440 | 440 | 480 | 600 | 600 |
| B | 520 | 620 | 720 | 720 | 1.120 | 1.320 | 1.120 | 1.320 | 1.320 | 1.620 | 1.620 |
| C | 870 | 1.020 | 1.120 | 1.160 | 1.150 | 1.250 | 1.020 | 1.120 | 1.160 | 1.470 | 1.470 |
| Kg | 49,5 | 65,0 | 77,9 | 83,9 | 129,9 | 154,7 | 110,7 | 137,4 | 197,4 | 248,4 | 250,4 |

Dimensions in mm

*WARNING: Check that the electrical current draw of the unit motors is compatible with the contact rating of the remote controls. If the electrical current draw is higher, or if the unit is equipped with two motors, it is recommended to use the SDI interface board.
(1) All HCNA units are supplied complete with standard "Mammut"-type terminal block, without thermostat.
(2) Each control panel can control only one unit (see "SDI" accessory).

# Price list

| HCNA | | | 71 | 117 | 143 | 165 | 216 (1) | 240 (1)(2) | 290 (1) | 293 (1)(2) | 330 (1)(2) | 565 (1)(2) | 685 (1)(2) |
|---|---|---|---|---|---|---|---|---|---|---|---|---|---|
| S | Recessed version - Single panel + Mammoth-type terminal board | € | 1.568 | 1.965 | 2.323 | 2.633 | 3.206 | 3.926 | 3.423 | 4.122 | 7.418 | 6.869 | 7.074 |
| D | Exposed version – Double panel + Mammoth-type terminal board | € | 2.162 | 2.710 | 3.160 | 3.517 | 4.411 | 5.292 | 4.450 | 5.299 | 5.952 | 8.548 | 8.754 |

| FACTORY-MOUNTED ACCESSORIES | | | | | | | | | | | | | |
|---|---|---|---|---|---|---|---|---|---|---|---|---|---|
| 2V-13 | No. 1 two-way valve with 230V actuator | € | 970 | | | | | | | | | | |
| 2V-16 | No. 1 two-way valve with 230V actuator | € | 1.075 | | | | | | | | | | |
| 2V–2.8 | No. 1 two-way valve with 230V actuator | € | 185 | | | | | | | | | | |
| 2V–5.2 | No. 1 two-way valve with 230V actuator | € | 217 | | | | | | | | | | |
| 3V-13 | No. 1 three-way valve with 230V actuator | € | 1.122 | | | | | | | | | | |
| 3V-16 | No. 1 three-way valve with 230V actuator | € | 1.260 | | | | | | | | | | |
| 3V-2.8 | No. 1 three-way valve with 230V actuator | € | 263 | | | | | | | | | | |
| 3V-5.2 | No. 1 three-way valve with 230V actuator | € | 302 | | | | | | | | | | |
| BC | Hot coil | € | 385 | 547 | 698 | 698 | 942 | 942 | 1.201 | 1.201 | 1.201 | 1.856 | 1.856 |
| TMB | Minimum hot water temperature thermostat (WEEE €0.02) | € | 42 | | | | | | | | | | |
| PFA-D | Ductable air filter section + EU3 flat air filter Double pre-painted panel | € | 311 | 378 | 418 | 442 | 660 | 561 | 742 | 631 | 670 | 891 | 896 |
| PFA-S | Ductable air filter section + flat EU3 air filter, simple galvanized sheet metal Single pre-painted panel | € | 137 | 168 | 190 | 202 | 313 | 261 | 355 | 295 | 317 | 435 | 440 |
| PFO-D | Ductable air filter section + corrugated EU5 air filter, H=100 mm, high efficiency Double pre-painted panel | € | 343 | 425 | 4738 | 503 | 770 | 648 | 874 | 732 | 783 | 1.060 | 1.064 |
| PFO-S | Ductable air filter section + corrugated EU5 air filter, H=100 mm, high efficiency Plain galvanized sheet steel | € | 167 | 216 | 243 | 263 | 423 | 344 | 489 | 394 | 432 | 604 | 610 |
| MB | Brushless motor | € | 1.406 | 1.296 | 1.244 | 937 | 1.629 | 2.181 | 2.590 | 2.486 | 1.873 | 3.260 | 4.360 |
| ACCESSORIES SUPPLIED SEPARATELY | | | | | | | | | | | | | |
| MS | "230 Vac on/off" servomotor for air damper | € | 682 | 682 | 682 | 682 | 878 | 682 | 878 | 682 | 682 | 878 | 878 |
| P2S-D | Closed section + 2 balancing/adjustment dampers (1 lower and 1 rear). Double pre-painted panel. | € | 837 | 962 | 1.038 | 1.151 | 1.659 | 1.317 | 1.820 | 1.454 | 1.605 | 2.105 | 2.110 |
| P2S-S | Closed section + 2 balancing/adjustment dampers (1 lower and 1 rear). Simple galvanized sheet metal. | € | 587 | 652 | 701 | 788 | 1.125 | 883 | 1.234 | 975 | 1.093 | 1.417 | 1.422 |
| P90-S | 90° section. Simple galvanized sheet metal | € | 142 | 176 | 193 | 206 | 304 | 247 | 334 | 271 | 289 | 393 | 399 |
| P90-D | 90° section. Double pre-painted panel | € | 387 | 484 | 523 | 564 | 829 | 670 | 912 | 740 | 794 | 1.070 | 1.076 |
| PCR-D | Sheet metal section with circular "Ø" connections, internally insulated. Double pre-painted panel | € | 577 | 697 | 748 | 788 | 1.164 | 1005 | 1.354 | 1.183 | 1.235 | 1.557 | 1.564 |
| PCR-S | Sheet metal section with circular "Ø" connections, internally insulated. Plain galvanized sheet metal. | € | 332 | 390 | 414 | 427 | 638 | 578 | 778 | 715 | 736 | 879 | 888 |
| PFT-D | Ductable air filter section + EU7 pocket air filter, H=400 mm, ultra-high efficiency. Double pre-painted panel | € | 541 | 653 | 716 | 756 | 1.120 | 961 | 1.258 | 1.083 | 1.145 | 1.507 | 1.513 |
| PFT-S | Ductable air filter section + EU7 pocket air filter, H = 400 mm, very high efficiency. Plain galvanized sheet metal. | € | 261 | 327 | 366 | 393 | 620 | 514 | 710 | 590 | 637 | 876 | 881 |
| PMA-S | Outdoor air mixing section (0–33%) / return air (100–67%). Plain galvanized sheet metal | € | 208 | 250 | 269 | 295 | 426 | 343 | 468 | 377 | 411 | 547 | 552 |
| PMA-D | Outdoor air (0–33%) / return air (100–67%) mixing section. Double pre-painted panel | € | 454 | 556 | 602 | 653 | 955 | 766 | 1.044 | 846 | 913 | 1.225 | 1.230 |
| PMP | Condensate pump with integrated 0.5 L tank, equipped with 4A (250V) alarm contact | € | 413 | 413 | 413 | 413 | 413 | 413 | 413 | 413 | 413 | 413 | 413 |
| PSL-D | Labyrinth silencer section, suitable for both air intake and supply openings. Double pre-painted panel | € | 543 | 674 | 728 | 787 | 1.158 | 931 | 1.269 | 1026 | 1.104 | 1.490 | 1.503 |
| PSL-S | Labyrinth silencer section, suitable for both intake and supply air openings. Plain galvanized sheet metal. | € | 300 | 368 | 397 | 427 | 628 | 507 | 691 | 559 | 602 | 812 | 821 |
| SDI.2X10A (1)(2) | Board with 2 outputs (2 motors, 3 speeds) rated at 10 A | € | 269 | 269 | 269 | 269 | 269 | 269 | 269 | 269 | 269 | 269 | 269 |
| SDI.4X3A | Board with 4 outputs (4 motors, 3 speeds) rated at 3 A | € | 274 | 274 | 274 | 274 | 274 | 274 | 274 | 274 | 274 | 274 | 274 |
| TEL (2) | Remote control system | € | 320 | 320 | 320 | 320 | 320 | 320 | 320 | 320 | 320 | 320 | 320 |

(1) With AIRMUST 3VA1, AIRMUST P and CRA accessories, when combined with units with an electrical absorption greater than 3A, or with 2 motors, please add the SDI.2x10A interface board.
(2) With the TEL accessory, if combined with a unit having an electrical absorption greater than 7A, or with 2 electric motors, please add the SDI.2x10A interface board.
For the wired controller price lists, refer to the pages at the beginning of the chapter.

# OTAE-1 40÷500

## Cross-flow aluminium heat recovery unit

400 m³/h ÷ 4700 m³/h

- Double-inlet centrifugal electric fans with direct-drive electric motors, available in multiple speeds; high-efficiency electric motors featuring EC technology.
- Integrated thermal bypass device.
- Sandwich-type panel structure, 23 mm thick, with galvanized steel sheet on the inside and pre-painted steel sheet on the outside, featuring thermo-acoustic insulation in injected polyurethane with a density of 45 kg/m³.
- Filtration sections consisting of compact cell filters with polypropylene media featuring low pressure drop, side-removable, efficiency class ISO 16890 ePM1 55% on the supply air stream and ePM10 55% on the exhaust air stream.
- Integrated dirty filter indication pressure switch.
- Condensate collection tray made of galvanized sheet metal with a bottom drain connection that ensures complete drainage.
- The **NECS remote control** enables smart and secure management of the unit, with remote monitoring and adjustment via an app over a Wi-Fi network.
- The **NECS remote control** comes with intake and exhaust temperature sensors as standard.

### Versions

- OTAE-1: Horizontal units with EC fans

| | | | 40 | 75 | 100 | 150 | 200 | 320 | 400 | 500 |
|---|---|---|---|---|---|---|---|---|---|---|
| OTAE-1 | Air flow rate | m³/h | 400 | 750 | 1000 | 1500 | 2050 | 3200 | 3800 | 4700 |
| | Available static pressure | Pa | 160 | 120 | 180 | 160 | 120 | 180 | 200 | 200 |
| | Maximum available static pressure | Pa | 340 | 160 | 520 | 500 | 540 | 375 | 330 | 200 |
| | Power supply | V/ph/Hz | 230/1/50 | | | | | | | |
| | Maximum absorbed current | A | 2,4 | 2,4 | 9,0 | 9,0 | 9,0 | 10,0 | 8,8 | 8,8 |
| | Fans | | | | | | | | | |
| | Motor type | | EC | | | | | | | |
| | (1) Speed | no. | Multiple | | | | | | | |
| | (2) Sound pressure | dB (A) | 49 | 52 | 51 | 53 | 51 | 56 | 58 | 60 |
| | Heat recovery unit | | | | | | | | | |
| | (3) Winter thermal efficiency | % | 83,6 | 82,9 | 81,6 | 83,3 | 83,7 | 86,8 | 84,1 | 84 |
| | (4) Summer thermal efficiency | % | 75,5 | 75,9 | 74,5 | 75,1 | 75,6 | 78,0 | 75,0 | 75,1 |
| | (5) Dry efficiency | % | 75,9 | 76,4 | 75,0 | 75,6 | 76,0 | 76,3 | 75,5 | 75,6 |

(1) Multiple = Multi-speed > 3
Man = Manual from selector or keypad; 0–10V = From potentiometer or keypad;
VSD = At constant airflow or modulation via air quality/humidity sensor
(2) A-weighted sound pressure level measured at 1 m from the casing on the inspection side, with supply, exhaust, return and outdoor air connections ducted, under nominal operating conditions
(3) Outdoor air -5°C 80% RH; indoor air 20°C 50% RH
(4) Outdoor air 32°C 50% RH; indoor air 26°C 50% RH
(5) According to EU Regulation 1253/2014: at rated pressure; temperature and humidity conditions as specified in EN 308

# Dimensional Drawings

## OTAE-1

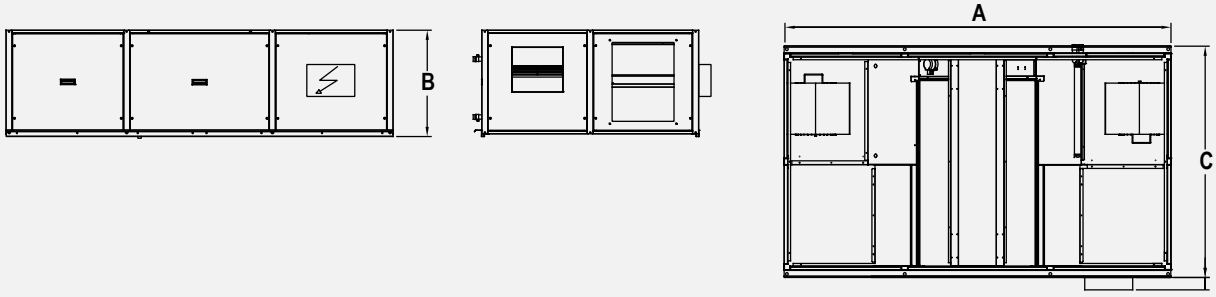


**Mod. 40**
**Orientamento tipo 01 / *Configuration type 01***

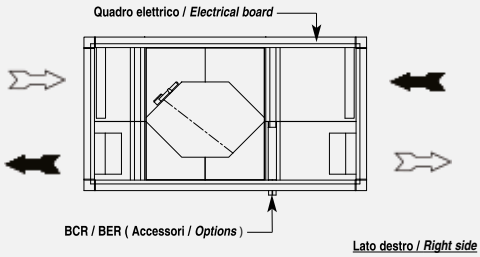


**Mod. 40**
**Orientamento tipo 02 / *Configuration type 02***

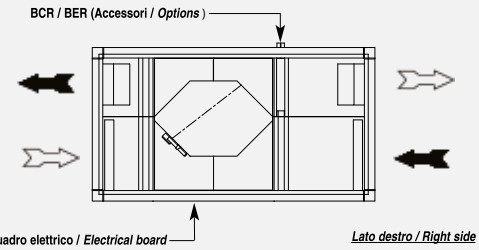


**Mod. 75 - 500**
**Orientamento tipo 01 / *Configuration type 01***

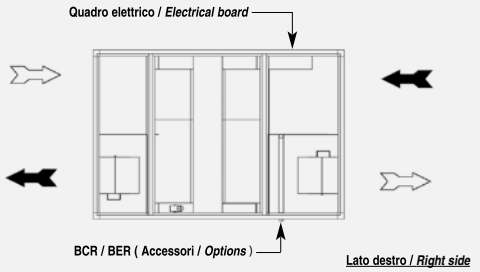


**Mod. 75 - 500**
**Orientamento tipo 02 / *Configuration type 02***

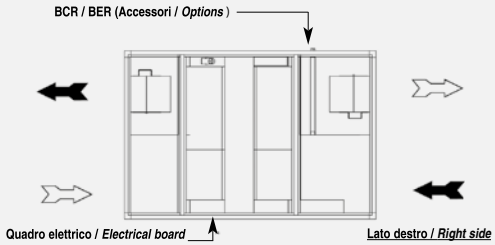


**Gli orientamenti raffigurati sono relativi alla macchina vista dall'alto / *The configurations are referred to the top view***

**Aria di rinnovo / *Fresh Air*** **Aria espulsa / *Exhaust Air***

| | 40 | 75 | 100 | 150 | 200 | 320 | 400 | 500 |
|---|---|---|---|---|---|---|---|---|
| A | 1480 | 1940 | 1940 | 2200 | 2200 | 2500 | 2500 | 2500 |
| B | 380 | 480 | 480 | 550 | 550 | 680 | 680 | 680 |
| C | 800 | 990 | 990 | 1000 | 1400 | 1400 | 1400 | 1700 |
| Kg | 90 | 140 | 140 | 170 | 200 | 230 | 260 | 300 |

Dimensions in mm

# Price list

| OTAE-1 | | | 40 | 75 | 100 | 150 | 200 | 320 | 400 | 500 |
|---|---|---|---|---|---|---|---|---|---|---|
| OTAE-1 | Horizontal heat recovery units with aluminum heat exchanger and EC fan | € | 5.699 | 7.854 | 8.190 | 9.152 | 10.509 | 11.579 | 13.313 | 14.477 |

Specify the type of orientation when placing the order.
* The OTA1 500 Unit features speed control with an inverter (INV accessory) and must mandatorily be combined with a model with very specific technical specifications, which can be requested and supplied by the company or purchased on the open market.

For accessories in this range, please refer to the following pages on accessories for the OTAE-1, OTA1-V and OTA1-P

# OTAE-1 V 40÷500

## Vertical cross-flow aluminium heat recovery units

400 m³/h ÷ 4700 m³/h

- Double-inlet centrifugal electric fans with direct-drive electric motors, available in multiple speeds; high-efficiency electric motors featuring EC technology.
- Integrated thermal bypass device.
- Sandwich-type panel structure, 23 mm thick, with galvanized steel sheet on the inside and pre-painted steel sheet on the outside, featuring thermo-acoustic insulation in injected polyurethane with a density of 45 kg/m³.
- Filtration sections consisting of compact cell filters with polypropylene media featuring low pressure drop, side-removable, efficiency class ISO 16890 ePM1 55% on the supply air stream and ePM10 55% on the exhaust air stream.
- Integrated dirty filter indication pressure switch.
- Condensate collection tray made of galvanized sheet metal with a bottom drain connection that ensures complete drainage.
- The **NECS remote control** enables smart and secure management of the unit, with remote monitoring and adjustment via an app over a Wi-Fi network.
- The **NECS remote control** comes with intake and exhaust temperature sensors as standard.

### Versions

- OTAE-1 V: Vertical units with EC fans

| | | | 40 | 75 | 100 | 150 | 200 | 320 | 400 | 500 |
|---|---|---|---|---|---|---|---|---|---|---|
| OTAE-1 V | Air flow rate | m³/h | 400 | 750 | 1000 | 1500 | 2050 | 3200 | 3800 | 4700 |
| | Available static pressure | Pa | 160 | 120 | 180 | 160 | 120 | 180 | 200 | 200 |
| | Maximum available static pressure | Pa | 340 | 160 | 520 | 500 | 540 | 375 | 330 | 200 |
| | Power supply | V/ph/Hz | 230/1/50 | | | | | | | |
| | Maximum absorbed current | A | 2,4 | 2,4 | 9,0 | 9,0 | 9,0 | 10,0 | 8,8 | 8,8 |
| | Fans | | | | | | | | | |
| | Motor type | | EC | | | | | | | |
| | (1) Speed | no. | Multiple | | | | | | | |
| | (2) Sound pressure | dB (A) | 49 | 52 | 51 | 53 | 51 | 56 | 58 | 60 |
| | Heat recovery unit | | | | | | | | | |
| | (3) Winter thermal efficiency | % | 83,6 | 82,9 | 81,6 | 83,3 | 83,7 | 86,8 | 84,1 | 84 |
| | (4) Summer thermal efficiency | % | 75,5 | 75,9 | 74,5 | 75,1 | 75,6 | 78,0 | 75,0 | 75,1 |
| | (5) Dry efficiency | % | 75,9 | 76,4 | 75,0 | 75,6 | 76,0 | 76,3 | 75,5 | 75,6 |

(1) Multiple = Multi-speed > 3
Man = Manual from selector or keypad; 0–10V = From potentiometer or keypad;
VSD = At constant airflow or modulation via air quality/humidity sensor
(2) A-weighted sound pressure level measured at 1 m from the casing on the inspection side, with supply, exhaust, return and outdoor air connections ducted, under nominal operating conditions
(3) Outdoor air -5°C 80% RH; indoor air 20°C 50% RH
(4) Outdoor air 32°C 50% RH; indoor air 26°C 50% RH
(5) According to EU Regulation 1253/2014: at rated pressure; temperature and humidity conditions as specified in EN 308

## Dimensional Drawings

**OTA E-1 V**

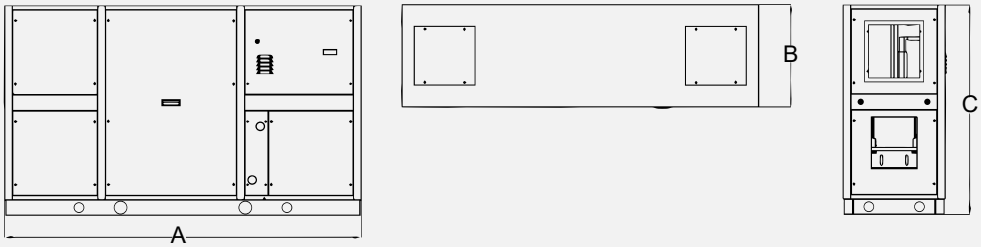


**Mod. 40 N - 500 N**
**Orientamento tipo 01 / *Configuration type 01***

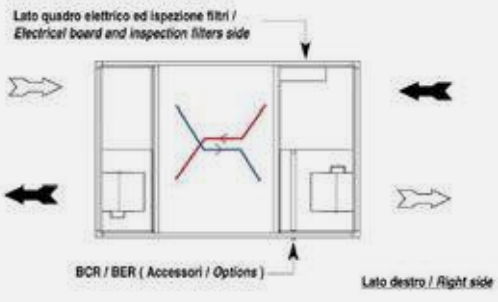


**Mod. 40 N - 500 N**
**Orientamento tipo 02 / *Configuration type 02***

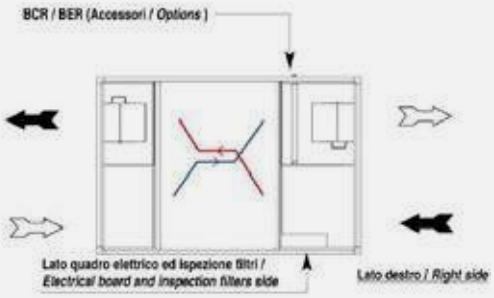


**Gli orientamenti raffigurati sono relativi alla macchina vista dall'alto /**
***The configurations are referred to the top view***

**Mod. 40 V - 500 V**
**Orientamento tipo 01 / *Configuration type 01***

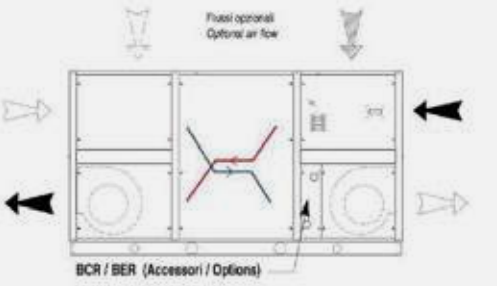


**Mod. 40 V - 500 V**
**Orientamento tipo 02 / *Configuration type 02***

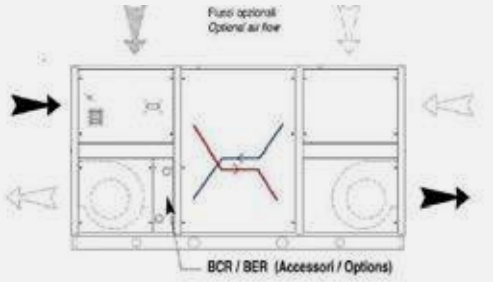


**Gli orientamenti raffigurati sono relativi alla macchina lato ispezione /**
***The configurations are referred to the inspection side***

**Aria di rinnovo / *Fresh Air*** **Aria espulsa / *Exhaust Air***

| | 40 | 75 | 100 | 150 | 200 | 320 | 400 | 500 |
|---|---|---|---|---|---|---|---|---|
| A | 1480 | 1940 | 1940 | 2200 | 2200 | 2500 | 2500 | 2500 |
| B | 420 | 520 | 520 | 520 | 720 | 720 | 720 | 720 |
| C | 830 | 1070 | 1070 | 1080 | 1480 | 1480 | 1480 | 1780 |
| Kg | 90 | 150 | 160 | 180 | 220 | 250 | 280 | 330 |

Dimensions in mm

## Price list

| OTAE-1V | | | 40 | 75 | 100 | 150 | 200 | 320 | 400 | 500 |
|---|---|---|---|---|---|---|---|---|---|---|
| OTAE-1V | Vertical heat recovery units with aluminum heat exchanger and EC fan | € | 5.926 | 8.410 | 8.745 | 9.793 | 11.246 | 12.387 | 14.251 | 15.494 |

Specify the type of orientation when placing the order.
* The OTA1 500 Unit features speed control with an inverter (INV accessory) and must mandatorily be combined with a model with very specific technical specifications, which can be requested and supplied by the company or purchased on the open market.

For accessories in the range, refer to the following pages concerning accessories for OTA1, OTA1-V, OTA1-P

# OTAE-1 P 40÷320

## Heat recovery unit with enthalpy exchanger

400 m³/h÷3100 m³/h

- Double-inlet centrifugal electric fans with direct-drive electric motors, available in multiple speeds; high-efficiency electric motors featuring EC technology.
- Horizontal ceiling installation, bottom extraction of the heat exchanger for all models.
- Sandwich-type panel structure, 23 mm thick, with galvanized steel sheet on the inside and pre-painted steel sheet on the outside, featuring thermo-acoustic insulation in injected polyurethane with a density of 45 kg/m³.
- Filtration sections consisting of compact cell filters with polypropylene media featuring low pressure drop, side-removable, efficiency class ISO 16890 ePM1 55% on the supply air stream and ePM10 55% on the exhaust air stream.
- Integrated dirty filter indication pressure switch.
- The **NECS remote control** enables smart and secure management of the unit, with remote monitoring and adjustment via an app over a Wi-Fi network.
- The **NECS remote control** comes with intake and exhaust temperature sensors as standard.

### Versions

- OTAE-1 P: Horizontal units with EC fans

| | | | | | | | | |
|---|---|---|---|---|---|---|---|---|
| **OTAE-1 P** | Air flow rate | m³/h | 400 | 660 | 1000 | 1500 | 2300 | 3100 |
| | Rated available static pressure | Pa | 170 | 120 | 160 | 190 | 240 | 190 |
| | Maximum available static pressure | Pa | 375 | 250 | 535 | 550 | 447 | 400 |
| | Power supply | V/ph/Hz | 230/1/50 | | | | | |
| | Maximum total absorbed current | A | 2,40 | 2,40 | 9,00 | 9,00 | 9,00 | 10,00 |
| | Fans | | | | | | | |
| | Motor type | | EC | | | | | |
| | (1) Speed | no. | Multiple | | | | | |
| | Fan power input | kW | 0,15 | 0,26 | 0,48 | 0,62 | 1,31 | 1,50 |
| | (2) Sound pressure | dB (A) | 49 | 49 | 52 | 53 | 59 | 58 |
| | Heat recovery unit | | | | | | | |
| | (3) Winter thermal efficiency | % | 75,00 | 73,70 | 74,00 | 73,00 | 73,20 | 71,40 |
| | (4) Winter enthalpy efficiency | % | 60,00 | 58,20 | 58,80 | 62,50 | 62,70 | 55,50 |
| | (5) Summer thermal efficiency | % | 64,10 | 59,70 | 60,20 | 60,10 | 60,20 | 57,04 |
| | (4) Summer enthalpic efficiency | % | 56,70 | 55,10 | 55,70 | 58,30 | 58,50 | 52,50 |
| | (5) Dry thermal efficiency | % | 75,10 | 73,70 | 74,20 | 73,10 | 73,20 | 73,00 |

(1) Multiple = Multi-speed > 3
Man = Manual from selector or keypad; 0–10V = From potentiometer or keypad;
VSD = At constant airflow or modulation via air quality/humidity sensor
(2) A-weighted sound pressure level measured at 1 m from the casing on the inspection side, with supply, exhaust, return and outdoor air connections ducted, under nominal operating conditions

(3) Outdoor air -5°C 80% RH; indoor air 20°C 50% RH
(4) Outdoor air 32°C 50% RH; indoor air 26°C 50% RH
(5) According to EU Regulation 1253/2014: at rated pressure; temperature and humidity conditions as specified in EN 308

# Dimensional Drawings

## OTAE-1 P

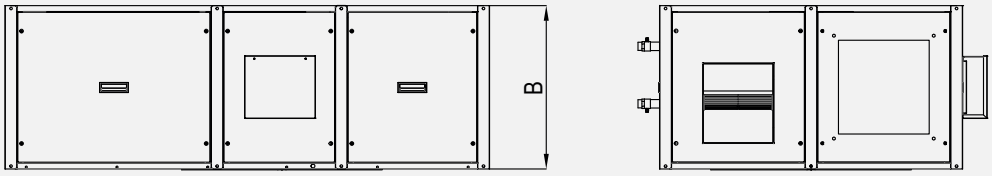


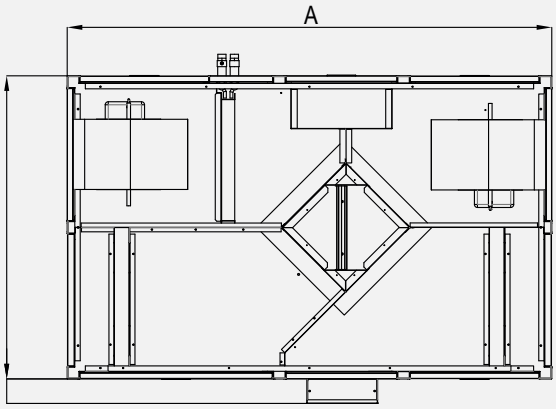


**Orientamento tipo 01**
***Configuration type 01***

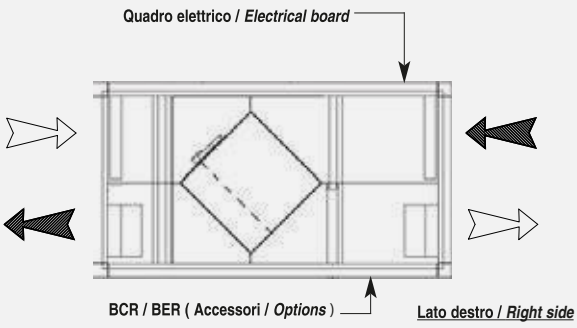


**Orientamento tipo 02**
***Configuration type 02***

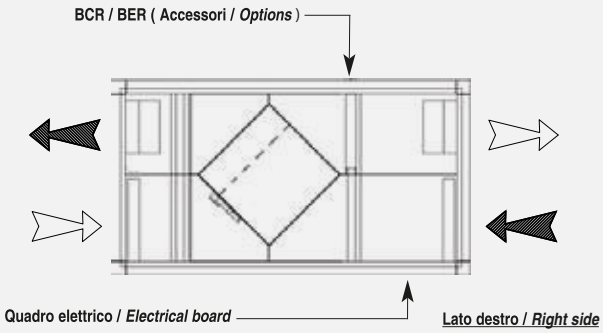


**Aria di rinnovo / *Fresh Air*** **Aria espulsa / *Exhaust Air***

| | 40 | 75 | 100 | 150 | 200 | 320 |
|---|---|---|---|---|---|---|
| A | 1480 | 1450 | 1600 | 2000 | 2000 | 2100 |
| B | 380 | 480 | 550 | 680 | 680 | 680 |
| C | 800 | 990 | 1000 | 1290 | 1290 | 1400 |
| Kg | 80 | 120 | 150 | 190 | 200 | 220 |

Dimensions in mm

## Price list

| OTAE-1 P | | | 40 | 75 | 100 | 150 | 200 | 320 |
|---|---|---|---|---|---|---|---|---|
| OTAE-1 P | Horizontal heat recovery units with paper heat exchanger and EC fan | € | 5.067 | 6.846 | 7.221 | 8.666 | 10.665 | 11.946 |

Specify the type of orientation when placing the order.
* The OTA1 500 Unit features speed control with an inverter (INV accessory) and must mandatorily be combined with a model with very specific technical specifications, which can be requested and supplied by the company or purchased on the open market.

For the accessories in the range, refer to the following pages relating to the accessories for OTA1, OTA1-V, OTA1-P.
(1) Only if SBFR or BCR is present

# Accessories for OTAE-1, OTAE-1 V, OTAE-1 P

- **ATG**: Frost protection thermostat. It allows monitoring that the temperature of the air passing through the heat recovery unit and/or water coils does not fall below a preset value that could cause frosting of the heat exchanger or freezing of the water inside the pipes (3–5°C). It is equipped with a bulb and capillary sensor, which is positioned evenly along the air inlet side of the coils.
- **BCR**: Internal hot-water post-heating coil. The BCR coil is used when only post-heating is required and must be mounted directly inside the heat recovery unit.
- **BER**: Integrated electric reheat coil. The coil, complete with safety thermostats and control relays, is of the filament type in order to minimize pressure drops. It is installed externally to the unit in a dedicated module.
- **BIOX**: Bioxigen® sanitization system. Technology that releases active oxygen ions into rooms, reducing bacteria and pollutants by up to 85%, and in critical conditions by up to 99%. The system uses a quartz capacitor with metal meshes, powered at low energy consumption. The electric field generated produces negative and positive ions which, aggregating into clusters, have a strong oxidizing and sanitizing effect.
- **CPA**: Outdoor hood kit. Completes the EXT kit for outdoor installation, allowing fresh air intake and exhaust air discharge without the need for ductwork.
- **EXT**: Outdoor installation kit. For installation of the unit outdoors (e.g. on the roof), the unit can be equipped with the following optional components.
- **F7CF**: High-efficiency exhaust filters
- **KBP**: Bypass management kit. The bypass kit enables automatic opening of the bypass by monitoring the supply and return air conditions along with an external enable signal.
- **NECS**: Unit control panel with Modbus and Wi-Fi
- **PF**: Additional filter pressure switch
- **QSC/QSA**: $CO_2$ sensor.
- **RMS**: Section 3 defrost dampers. The RMS section is equipped with 3 galvanized sheet metal dampers with adjustable blades and fitted with a shaft for a servomotor. Proper actuation of the dampers allows mixing of the return air from the room with the fresh air, up to achieving total recirculation.
- **SBFR**: Section with combined hot/chilled water coil
- **SCMB**: Modbus board for SIGB / Q. Additional module for the SIGB system: adds compatibility with the Modbus RTU communication protocol to the system, enabling supervision of the unit's operating parameters.
- **SIGB**: On-board integrated management system. It allows integrated management of all functions available in the heat recovery unit and is equipped with a built-in display.
- **SM/SMR230**: Damper actuators. SM damper actuators enable motorization of SR dampers, while SMR230 actuators motorize the three dampers of the RMS accessory.
- **SPC**: Kit with 4 circular connections. The SPC connections allow quick coupling of the units to circular ducts for air supply and exhaust. The circular galvanized sheet metal rings are appropriately sized according to the heat recovery unit model.
- **SR**: Balancing damper consisting of a galvanized sheet metal frame with adjustable blades.
- **SSC**: Duct silencers. Device used to reduce the noise generated by the fan and transmitted through the air ducts. It consists of rectangular galvanized steel baffles filled with glass wool, lined with "velovetro" and protected by micro-perforated sheet metal.
- **TUP**: Remote user terminal (SiGB only)
- **USD/USW**: Humidity sensor
- **V2O**: 2-way valve kit with on-off actuator. Allows on-off control of the internal hot water reheat coil BCR or of the section with hot water coil SBFR.
- **V3O**: 3-way valve kit with on-off servomotor
- **V3M**: 3-way valve kit with modulating servomotor. Allows modulating control of the internal hot water post-heating coil BCR or of the SBFR water coil section.
- **VSD**: Constant air volume fan control. With this accessory, the unit automatically adapts to the characteristics of the system and the factory-set air flow rate is kept constant as the pressure drops vary due, for example, to progressive filter clogging. The fan speed will modulate accordingly within its operating range.

# Accessories price list for OTAE-1, OTAE-1 V, OTAE-1 P

**OTAE-1, OTAE-1V**
Models: 40 - 75 - 100 - 150 - 200 - 320 - 400 - 500

**OTAE-1 P**
Models: 40 - 75 - 100 - 150 - 200 - 320

| | | | 40 | 75 | 100 | 150 | 200 | 320 | 400 | 500 |
|---|---|---|---|---|---|---|---|---|---|---|
| ATG | Frost protection thermostat (1) | € | 250 | 250 | 250 | 250 | 250 | 250 | 250 | 250 |
| BCR | Water coil for post-heating | € | 546 | 667 | 667 | 844 | 907 | 976 | 1.181 | 1.294 |
| BER | Electric reheat coil | € | 873 | 965 | 1.222 | 1.222 | 1.525 | 1.525 | 1.767 | 2.299 |
| BIOX | Sanitization system | € | 890 | 976 | 976 | 1.191 | 1.249 | 1.860 | 2.155 | 2.155 |
| CPA | Outdoor sleeve kit | € | 125 | 140 | 140 | 152 | 169 | 169 | 185 | 185 |
| EXT | Outdoor installation kit | € | 1014 | 1.062 | 1.118 | 1.174 | 1.238 | 1.301 | 1.367 | 1.438 |
| F7CF | F7 filter | € | 110 | 149 | 193 | 216 | 265 | 287 | 314 | 338 |
| KBP | Bypass kit | € | 514 | 514 | 514 | 514 | 514 | 514 | 514 | 514 |
| PF | Pressure switch for clogged filter detection | € | 240 | 240 | 240 | 240 | 240 | 240 | 240 | 240 |
| RMS | Section No. 3 dampers for mixing/recirculation | € | 1.174 | 1.318 | 1.605 | 1.841 | 2.019 | 2.122 | 2.186 | 2.448 |
| SBFR | Water coil for cooling/heating | € | 1.093 | 1.438 | 1.438 | 1.599 | 1.832 | 1.891 | 1.944 | 2.387 |
| SIGB | Integral management system installed on board the unit | € | 1.705 | 1.705 | 1.801 | 1.801 | 1.944 | 1.944 | 2.122 | 2.122 |
| SM230 | Damper actuator 230V, 2/3 point | € | 416 | 416 | 416 | 416 | 416 | 416 | 416 | 416 |
| SMR230 | 230V damper actuator, on/off, spring return | € | 697 | 697 | 697 | 697 | 697 | 697 | 697 | 697 |
| SPC | Kit no. 4 circular connections | € | 287 | 365 | 416 | 486 | 524 | 549 | 608 | 627 |
| SR | Control damper | € | 213 | 244 | 327 | 349 | 380 | 396 | 412 | 435 |
| SSC | Duct silencers | € | 673 | 803 | 1.245 | 1.301 | 1.363 | 1.463 | 1.608 | 1.881 |
| USD* | Duct-mounted humidity sensor | € | 675 | 675 | 675 | 675 | 675 | 675 | 675 | 675 |
| USW* | Wall-mounted humidity sensor | € | 338 | 338 | 338 | 338 | 338 | 338 | 338 | 338 |
| V2O BCR | Two-way valve kit with on/off actuator | € | 415 | 415 | 415 | 415 | 415 | 415 | 415 | 697 |
| V3M BCR | Three-way valve kit with modulating actuator | € | 603 | 603 | 603 | 603 | 603 | 603 | 603 | 724 |
| V2O SBFR | 2-way valve kit with on/off actuator | € | 415 | 415 | 415 | 415 | 426 | 426 | 426 | 675 |
| V3M SBFR | Three-way valve kit with modulating actuator | € | 697 | 697 | 697 | 697 | 697 | 697 | 697 | 753 |
| NECS | Unit control panel with Modbus and Wi-Fi | € | 473 | 473 | 473 | 473 | 473 | 473 | 473 | 473 |
| QSA* | $CO_2$ sensor (ambient) | € | 1.062 | 1.062 | 1.062 | 1.062 | 1.062 | 1.062 | 1.062 | 1.062 |
| QSC* | Duct-mounted $CO_2$ sensor | € | 1.222 | 1.222 | 1.222 | 1.222 | 1.222 | 1.222 | 1.222 | 1.222 |
| SCMB | Modbus serial board for SIG | € | 353 | 353 | 353 | 353 | 353 | 353 | 353 | 353 |
| VSD | Constant airflow fan control | € | -- | -- | 298 | 298 | 298 | 298 | 676 | 676 |

(1)Only if SBFR or BCR is present
* Accessories that cannot be used simultaneously

# OTAE1-RHP 35÷450

## Combined heat recovery unit with thermodynamic system

350 m³/h÷4500 m³/h

Range consisting of 7 models, for ceiling installation with:

- Frame in extruded aluminum profile with preloaded nylon joints
- 23 mm thick sandwich-type infill panels, pre-painted on the outside and galvanized on the inside, with injected polyurethane insulation, density 45 kg/m³.
- Synthetic pleated filters with ISO 16890 efficiency class COARSE 55% on both air circuits, large surface area; alternatively, optional ePM1 70% filter.
- Crossflow air-to-air heat recovery unit with aluminum plates.
- Reversible R410A refrigerant circuit with on/off hermetic compressor, heat exchange coils with copper tubes and aluminum fins, and electronic expansion valve.
- Double-inlet centrifugal fans with directly coupled electric motor at fixed speed.
- High-efficiency EC fans with constant airflow operation for models from size 100 to 450.
- Internal electrical panel complete with control system and control panel.
- Possible integration with water or electric system.
- Global COP >8
- Operation in low-temperature outdoor air heat pump mode without preheating (with RMS accessory)

## Accessories

- **BER**: Integrated electric reheat coil. The coil, complete with safety thermostats and control relays, is of the filament type in order to minimize pressure drops. It is installed externally to the unit in a dedicated module.
- **BIOX**: Bioxigen® sanitization system. Technology that releases active oxygen ions into rooms, reducing bacteria and pollutants by up to 85%, and in critical conditions by up to 99%. The system uses a quartz capacitor with metal meshes, powered at low energy consumption. The electric field generated produces negative and positive ions which, aggregating into clusters, have a strong oxidizing and sanitizing effect.
- **CPA**: Completes the outdoor installation kit for the intake of fresh air and the expulsion of exhaust air, without the need for ductwork. Supplied complete with insect screen.
- **F7CF**: High-efficiency exhaust filters
- **PF**: Additional filter pressure switch
- **RMS**: Section 3 defrost dampers. Outdoor air and exhaust air mixing system active in winter mode, complete with modulating dampers and actuators, which prevents defrost cycles and extends the operating range down to -20 °C.
- **SBFR**: Section with auxiliary water coil
- **SCMB**: Modbus serial board. Plug-in module to be installed in the logic control unit already wired to the onboard electrical panel, which allows interfacing with a supervision system, to which most of the control functions normally handled by the control panel can be delegated.
- **SSC**: Duct silencers. Device used to reduce the noise generated by the fan and transmitted through the air ducts. It consists of rectangular galvanized steel baffles filled with glass wool, lined with "velovetro" and protected by micro-perforated sheet metal.
- **TUP**: Remote user terminal. Allows an additional user terminal to be connected and installed remotely at a maximum distance of 50 m, using a 6-core telephone cable (not supplied, to be provided by the installer).
- **V2O**: 2-way valve kit with on-off actuator. Allows on-off control of the internal hot water reheat coil BCR or of the section with hot water coil SBFR.
- **V3M**: 3-way valve kit with modulating servomotor. Allows modulating control of the internal hot water post-heating coil BCR or of the SBFR water coil section.
- **TTP**: Weather protection canopy. Rain shield cover with the same finish as the panels, projecting 50 mm from each side of the unit.
- **SPC1**: Circular connection. Made of galvanized sheet metal, it allows a quick connection of the unit to circular ducts, both on the discharge and suction side. It must be ordered for each spigot that requires connection to a circular duct.
- **SR230**: Outdoor air dampers and ON-OFF actuators. Devices used to shut off or regulate the air flow rate; they consist of a frame and blades in galvanized sheet metal, prepared with a shaft for connection to a manual control or servomotor. The latter, in combination with the damper, enables motorized operation.

## OTAE1-RHP

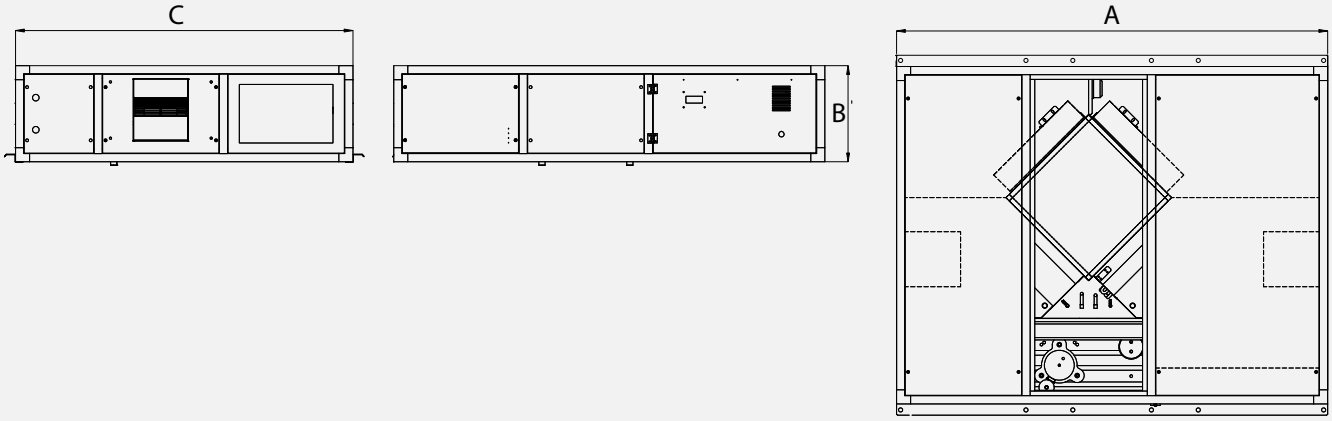


### Orientamento tipo 01 / *Configuration type 01*

*(tipo standard / standard type)*

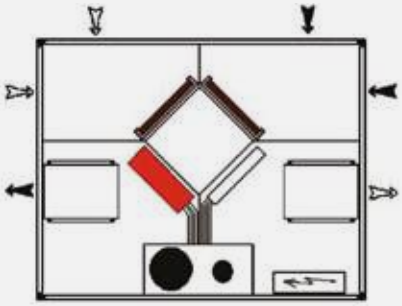

### Orientamento tipo 02 / *Configuration type 02*

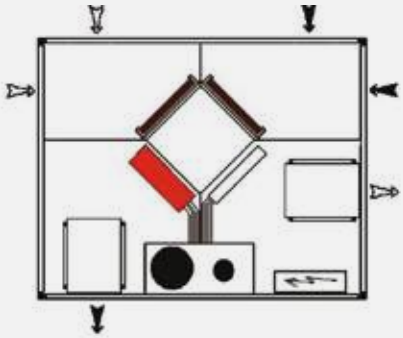

### Orientamento tipo 1S / *Configuration type 1S*

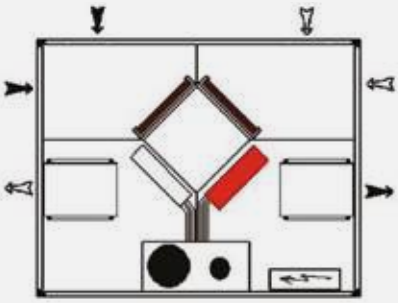

### Orientamento tipo 2S / *Configuration type 2S*

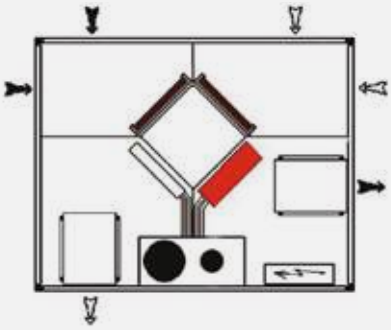

Gli orientamenti raffigurati sono relativi alla macchina vista dall'alto / *The configurations are referred to the top view*

Aria di rinnovo / *Fresh Air* — Aria espulsa / *Exhaust Air*

| | 35 | 60 | 100 | 150 | 230 | 320 | 450 |
|---|---|---|---|---|---|---|---|
| A | 1540 | 1540 | 1840 | 1840 | 2040 | 2040 | 2240 |
| B | 370 | 370 | 410 | 500 | 550 | 650 | 710 |
| C | 1240 | 1240 | 1440 | 1440 | 1690 | 1690 | 1890 |
| Kg | 122 | 125 | 185 | 228 | 267 | 281 | 329 |

Dimensions in mm

| | | | 35 | 60 | 100 | 150 | 230 | 320 | 450 |
|---|---|---|---|---|---|---|---|---|---|
| | Air flow rate | m³/h | 350 | 600 | 1000 | 1500 | 2300 | 3200 | 4500 |
| | Useful supply head | Pa | 270 | 285 | 295 | 290 | 365 | 265 | 270 |
| | Useful head Return | Pa | 245 | 215 | 240 | 230 | 305 | 195 | 205 |
| | (1) Sound pressure | dB (A) | 59 | 64 | 62 | 67 | 65 | 68 | 70 |
| | Power supply | V/ph/Hz | 230/1/50 | | | | 400/3/50 | | |
| | Absorbed current | A | 5,3 | 9,0 | 13,2 | 20,2 | 10,0 | 15,4 | 16,8 |
| | (3) Heating performance | | | | | | | | |
| **OTAE1-RHP** | Static recovery efficiency | % | 62 | 51 | 50 | 50 | 50 | 50 | 50 |
| | Thermal power of active recovery | W | 1740 | 2960 | 5010 | 7690 | 11090 | 16300 | 17300 |
| | Total thermal capacity | W | 3580 | 5790 | 9410 | 14390 | 21190 | 30260 | 36010 |
| | (4) Overall COP | W/W | 10,90 | 9,60 | 9,20 | 8,60 | 8,90 | 9,90 | 12,60 |
| | (5) Cooling performance | | | | | | | | |
| | Static recovery efficiency | % | 56 | 50 | 50 | 50 | 50 | 50 | 49 |
| | Cooling capacity with active heat recovery | W | 1810 | 2860 | 4890 | 7270 | 10580 | 15310 | 16990 |
| | Total cooling capacity | W | 2210 | 3450 | 5840 | 8720 | 12830 | 18390 | 21440 |
| | (4) Global EER | W/W | 4,2 | 3,9 | 4,2 | 3,9 | 3,9 | 4,1 | 5,0 |

(1) Sound pressure level calculated at 1 m from: ducted air outlet / air intake / compressor box.
(2) At nominal air flow rate
(3) Outside air at -5°C, 80% RH; room air at 20°C, 50% RH
(4) Potenza assorbita dal motore del ventilatore non inclusa
(5) Outside air at 32°C, 50% RH; room air at 26°C, 50% RH

## Price list

| OTAE1-RHP | | | 35 | 60 | 100 | 150 | 230 | 320 | 450 |
|---|---|---|---|---|---|---|---|---|---|
| OTA-E1-RHP | Heat recovery units with thermodynamic system and EC brushless motors | € | 12.870 | 13.416 | 15.172 | 16.860 | 20.624 | 23.481 | 27.238 |
| **ACCESSORIES** | | | | | | | | | |
| BER | Auxiliary electric heater | code | 011984#120055 | | 011984#120100 | | 011984#121040 | 011984#120250 | 011984#120500 |
| | | € | 873 | | 965 | | 1.222 | 1.525 | 1.849 |
| BIOX | Sanitization system | code | 011984#480055 | | 011984#480175 | 011984#480200 | 011984#480320 | 011984#480400 | 011984#480450 |
| | | € | 890 | | 977 | 1.191 | 1.759 | 1.861 | 2.155 |
| CPA | Direct air intake sleeves | code | 011984#730036 | | 011984#730100 | 011984#730150 | 011984#730230 | 011984#730320 | 011984#730450 |
| | | € | 156 | | 227 | 305 | 401 | 416 | 497 |
| F7CF | High-efficiency filters, Class F7 | code | 011984#410055 | | 011984#410100 | 011984#410175 | 011984#410250 | 011984#410400 | 011984#410450 |
| | | € | 110 | | 149 | 193 | 287 | 314 | 416 |
| PF | Differential pressure switch | code | 011984#140055 | | | | | | |
| | | € | 240 | | | | | | |
| RMS | Section 3 mixing/recirculation dampers with actuator | cod | 011984#400025 | | 011984#400025 | 011984#400025 | 011984#400025 | 011984#400025 | 011984#400025 |
| | | € | 3.295 | | 3.456 | 3.456 | 4.019 | 4.098 | 4.161 |
| SBFR | Section with auxiliary water coil | code | 011989#260055 | | 011989#260100 | 011989#260200 | 011989#260250 | 011989#260400 | 011989#260450 |
| | | € | 1.014 | | 1.157 | 1.489 | 1.720 | 1.832 | 2.195 |
| SCMB | Modbus serial interface board | code | 011984#550025 | | | | | | |
| | | € | 353 | | | | | | |
| SPC1 | Circular connection | code | 011984#710036 | 011984#710043 | 011984#710100 | 011984#710150 | 011984#710230 | 011984#710320 | 011984#710450 |
| | | € | 311 | 763 | 795 | 820 | 917 | 956 | 988 |
| SR230 | Control damper | code | 011984#240025 | | | | | | |
| | | € | 497 | | | | | | |
| SSC | Duct silencer | code | 011984#470055 | 011984#470055 | 011984#470100 | 011984#470175 | 011984#470250 | 011984#470400 | 011984#470450 |
| | | € | 673 | 673 | 803 | 1.245 | 1.363 | 1.608 | 1.944 |
| TUP | Remote user terminal | code | 011984#970025 | | | | | | |
| | | € | 867 | | | | | | |
| TTP | Rain protection canopy | code | 011984#720036 | | 011984#720100 | | 011984#720230 | | 011984#720450 |
| | | € | 780 | 780 | 851 | 851 | 1.311 | | 1.623 |
| V2O (1) | 2-way valve kit with on-off actuator | code | 011984#490025 | | | 011984#490150 | 011984#490025 | | 011984#490036 |
| | | € | 673 | | | 673 | 673 | | 697 |
| V3M (2) | 3-way valve kit with modulating actuator | code | 011984#700036 | | 011984#700100 | 011984#700150 | 011984#700230 | | |
| | | € | 722 | | 722 | | 722 | | |

Specify the type of orientation when placing the order.

# OTA1 micro E 25÷130

## Heat recovery unit with enthalpy exchanger

250 m³/h÷1300 m³/h

Characterized by the use of a special enthalpic air-to-air heat exchanger. This makes it possible to avoid, or at least significantly reduce, the use of post-treatment systems for the supply air, with consequent benefits in terms of energy consumption and system design.

- Self-supporting structure in galvanized sheet metal, internally and externally insulated, with access through a side inspection door.
- Air filtration with ISO 16890 efficiency class ePM2.5 95% (with COARSE 50% pre-filter) on the outdoor air, and COARSE 50% filter on the return air flow.
- Integrated dirty filter indication pressure switch.
- Motorized heat recovery bypass system automatically operated by the electronic control to ensure free cooling with outdoor air when convenient.
- Electrofans with high-efficiency, low-consumption EC motors, offering high performance and quiet operation; possibility to manage 10 speed levels.
- Duct connections with plastic fittings.
- Built-in electrical panel with electronic board for controlling ventilation and free-cooling functions.
- With the Wi-Fi module, it is possible to connect via app for remote control.

## Accessories

- **PTS**: Touch screen control panel. The remote control panel is required to manage all settings and functions of the heat recovery unit. It is equipped with a capacitive glass display and features blue backlighting. It is supplied complete with a 5-metre cable and connectors for connection to the electronic board on the unit.
- **BIOX**: Bioxigen® sanitization system. Technology that releases active oxygen ions into rooms, reducing bacteria and pollutants by up to 85%, and in critical conditions by up to 99%. The system uses a quartz capacitor with metal meshes, powered at low energy consumption. The electric field generated produces negative and positive ions which, aggregating into clusters, have a strong oxidizing and sanitizing effect.
- **QSW**: Wall-mounted $CO_2$ sensor. Suitable for controlling ventilation based on indoor air quality, according to the adjustable $CO_2$ ppm setpoint. Fan speed will increase in proportion to the ppm level measured by the probe. The $CO_2$ sensor is supplied complete with a 5-meter cable and connectors for connection to the electronic control board on the unit.
- **USW**: Wall-mounted humidity sensor. Suitable for controlling ventilation as a function of the ambient air relative humidity, based on the adjustable setpoint. The fan speed will increase in proportion to the humidity measured by the probe. The humidity sensor is supplied complete with a 5-metre cable and connectors for connection to the electronic control board on the unit.
- **SLC**: Circular duct silencer. Made of galvanized steel and internally lined with mineral wool and perforated sheet metal. Insulation thickness 50 mm. The connections have a diameter suitable for the unit and are fitted with sealing gaskets.
- **SBE1**: Electric pre-heating module
- **SBE2**: Electric post-heating module
- **WFM**: WiFi module for remote control via app

| | | | 25 | 35 | 50 | 65 | 80 | 100 | 130 |
|---|---|---|---|---|---|---|---|---|---|
| OTA1 micro E | Air flow rate | m³/h | 250 | 350 | 500 | 650 | 800 | 1000 | 1300 |
| | Rated available static pressure | Pa | 90 | 140 | 110 | 100 | 140 | 140 | 135 |
| | Power supply | V/ph/Hz | 230 / 1 / 50 | | | | | | |
| | Absorbed current | A | 0,5 | 0,6 | 0,6 | 1,2 | 1,4 | 2,1 | 2,7 |
| | Fans | | | | | | | | |
| | Motor type | | EC | | | | | | |
| | No. of speeds | | 10 | | | | | | |
| | Ventilation control (1) | W | Man / VSD | | | | | | |
| | Absorbed power | W | 80 | 130 | 150 | 230 | 320 | 390 | 490 |
| | Sound pressure (2) | dB(A) | 34 | 37 | 39 | 40 | 42 | 43 | 44 |
| | Heat recovery unit | | | | | | | | |
| | Winter thermal efficiency (3) | % | 73 | 74 | 76 | 74 | 76 | 76 | 74,2 |
| | Winter enthalpy efficiency (3) | % | 65 | 65 | 67 | 65 | 65 | 62 | 59 |
| | Summer thermal efficiency (4) | % | 73 | 74 | 76 | 74 | 76 | 76 | 74 |
| | Summer enthalpic efficiency (4) | % | 62 | 62 | 63 | 60 | 63 | 60 | 58 |
| | Dry thermal efficiency (5) | % | 73 | 74 | 76 | 74 | 76 | 76 | 74 |

(1) Man = Manual from selector or keypad; VSD = Modulation from air quality/humidity sensor
(2) Sound pressure level measured at 1 m from the casing on the inspection side, at nominal operating conditions
(3) Outdoor air -5°C 80% RH; indoor air 20°C 50% RH
(4) Outdoor air 32°C 50% RH; indoor air 26°C 50% RH
(5) According to EU Regulation 1253/2014: at rated pressure; temperature and humidity conditions as specified in EN 308

# Dimensional Drawings

## OTA1 micro-E

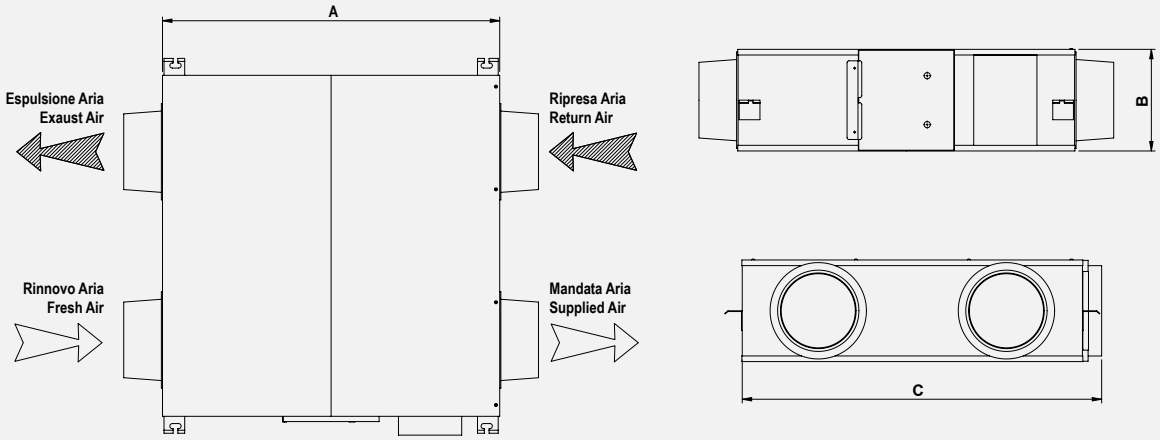


| | 25 | 35 | 50 | 65 | 80 | 100 | 130 |
|---|---|---|---|---|---|---|---|
| A | 815 | 815 | 895 | 1185 | 1185 | 1200 | 1200 |
| B | 270 | 270 | 270 | 390 | 390 | 390 | 390 |
| C | 650 | 855 | 955 | 945 | 1200 | 1290 | 1290 |
| Kg | 30 | 37 | 43 | 65 | 71 | 83 | 83 |

Dimensions in mm

# Price list

| OTA1 micro E | | | 25 | 35 | 50 | 65 | 80 | 100 | 130 |
|---|---|---|---|---|---|---|---|---|---|
| OTA1 micro E | High-efficiency heat recovery units with EC brushless motors | code | 0100716#0025 | 0100716#0035 | 0100716#0050 | 0100716#0065 | 0100716#0080 | 0100716#0100 | 0100716#0120 |
| | | € | 2.107 | 2.678 | 3.139 | 3.937 | 4.529 | 5.115 | 5.778 |

| ACCESSORIES | | | | | | | | | |
|---|---|---|---|---|---|---|---|---|---|
| BIOX | Sanitization system | code | 011984#480025 | 011984#480025 | 011984#480043 | 011984#480100 | 011984#480100 | 011984#480100 | 011984#480100 |
| | | € | 484 | 484 | 808 | 976 | 976 | 976 | 976 |
| PTS | Touch Screen Control Panel | code | 011984#870055 | 011984#870055 | 011984#870055 | 011984#870055 | 011984#870055 | 011984#870055 | 011984#870055 |
| | | € | 270 | 270 | 270 | 270 | 270 | 270 | 270 |
| QSW | Wall-mounted CO2 sensor | code | 011984#890025 | 011984#890025 | 011984#890025 | 011984#890025 | 011984#890025 | 011984#890025 | 011984#890025 |
| | | € | 560 | 560 | 560 | 560 | 560 | 560 | 560 |
| SBE1 | Electric pre-heating section | code | 011984#A10025 | 011984#A10230 | 011984#A10250 | 011984#A10300 | 011984#A10320 | 011984#A10400 | 011984#A10450 |
| | | € | 504 | 504 | 639 | 797 | 797 | 797 | 797 |
| SBE2 | Electric post-heating section | code | 011984#A20025 | 011984#A20230 | 011984#A20250 | 011984#A20300 | 011984#A20320 | 011984#A20400 | 011984#A20450 |
| | | € | 675 | 675 | 785 | 983 | 983 | 983 | 983 |
| SLC | Circular in-duct silencer | code | 011984#690025 | 011984#690025 | 011984#690055 | 011984#690150 | 011984#690100 | 011984#690100 | 011984#690100 |
| | | € | 151 | 151 | 188 | 208 | 228 | 228 | 228 |
| SLC | Wall-mounted humidity sensor | code | 011984#900025 | 011984#900025 | 011984#900025 | 011984#900025 | 011984#900025 | 011984#900025 | 011984#900025 |
| | | € | 282 | 282 | 282 | 282 | 282 | 282 | 282 |
| WFM | WiFi module for remote control via App | € | 110 | 110 | 110 | 110 | 110 | 110 | 110 |

## Compatibility and control systems

The following table illustrates the compatibility between the various optional accessories and the regulation and control systems.

| Version and optional accessories | | Control and regulation systems<br>Unit control with wall-mountable display<br>NECS | | | | | | | | | | | | | | | |
|---|---|---|---|---|---|---|---|---|---|---|---|---|---|---|---|---|---|
| Configuration ID | | 1 | 2 | 3 | 4 | 5 | 6 | 7 | 8 | 9 | 10 | 11 | 12 | 13 | 14 | 15 | 16 |
| Version with high-efficiency EC fans | **EC fans** | | | | | | | | | ● | ● | ● | ● | ● | ● | ● | ● |
| Integrated electric pre-heating coil | **BER-PRR** | ● | ● | ● | ● | ● | ● | ● | ● | ● | ● | ● | ● | ● | ● | ● | ● |
| Integrated electric reheat coil | **BER-POST** | | ● | | | | ● | | | | ● | | | | ● | | |
| Internal hot water reheat coil | **BCR** | | | ● | | | | ● | | | | ● | | | | ● | |
| Section with combined hot/cold water coil | **SBFR** | | | | ● | | | | ● | | | | ● | | | | ● |
| Section 3 defrost dampers | **RMS** | | | | | | | | | | | | | | | | |
| Damper actuators | **SM/SMR** | ● | ● | ● | ● | ● | ● | ● | ● | ● | ● | ● | ● | ● | ● | ● | ● |
| Bypass management kit | **KBP** | ● | ● | ● | ● | ● | ● | ● | ● | ● | ● | ● | ● | ● | ● | ● | ● |
| Additional filter pressure switch for return air filters | **PF** | ● | ● | ● | ● | ● | ● | ● | ● | ● | ● | ● | ● | ● | ● | ● | ● |
| Frost protection thermostat | **ATG** | | | ● | ● | | | ● | ● | | | ● | ● | | | ● | ● |
| 2-way valve kit with on-off actuator | **V2O** | | | ● | ● | | | ● | ● | | | ● | ● | | | ● | ● |
| 3-way valve kit with modulating actuator | **V3M** | | | ● | ● | | | ● | ● | | | ● | ● | | | ● | ● |
| Bioxigen® sanitization system | **BIOX** | ● | ● | ● | ● | ● | ● | ● | ● | ● | ● | ● | ● | ● | ● | ● | ● |
| Modbus board for SIGB / Q | **SCMB** | | | | | | | | | | | | | | | | |
| CO2 sensor | **QSC/QSA** | | | | | | | | | ● | ● | ● | ● | | | | |
| Humidity sensor | **USD/USW** | | | | | | | | | | | | | ● | ● | ● | ● |
| Outdoor installation kit | **EXT** | | | | | | | | | | | | | | | | |

* Modbus RTU card Valid only for NECS control

| Version and optional accessories | | Control and regulation systems<br>Integral onboard unit management system<br>SIGB | | | | | | | | | | | | | | | | Integrated management system with wall-mounted control panel<br>SIGQ | | | | | | | | | | | | | | | |
|---|---|---|---|---|---|---|---|---|---|---|---|---|---|---|---|---|---|---|---|---|---|---|---|---|---|---|---|---|---|---|---|---|---|
| Configuration ID | | 1 | 2 | 3 | 4 | 5 | 6 | 7 | 8 | 9 | 10 | 11 | 12 | 13 | 14 | 15 | 16 | 1 | 2 | 3 | 4 | 5 | 6 | 7 | 8 | 9 | 10 | 11 | 12 | 13 | 14 | 15 | 16 |
| Version with high-efficiency EC fans | **EC fans** | | | | | | | | | ● | ● | ● | ● | ● | ● | ● | ● | | | | | | | | | ● | ● | ● | ● | ● | ● | ● | ● |
| Integrated electric pre-heating element | **BER-PRR** | ● | ● | ● | ● | ● | ● | ● | ● | ● | ● | ● | ● | ● | ● | ● | ● | ● | ● | ● | ● | ● | ● | ● | ● | ● | ● | ● | ● | ● | ● | ● | ● |
| Integrated electric re-heating coil | **BER - POST** | | ● | | | | ● | | | | ● | | | | ● | | | | ● | | | | ● | | | | ● | | | | ● | | |
| Internal hot water reheat coil | **BCR** | | | ● | | | | ● | | | | ● | | | | ● | | | | ● | | | | ● | | | | ● | | | | ● | |
| Section with combined hot/ cold water coil | **SBFR** | | | | ● | | | | ● | | | | ● | | | | ● | | | | ● | | | | ● | | | | ● | | | | ● |
| Section 3 defrost dampers | **RMS** | | | | | | | | | ● | ● | ● | ● | ● | ● | ● | ● | | | | | | | | | ● | ● | ● | ● | ● | ● | ● | ● |
| Damper actuators | **SM/SMR** | ● | ● | ● | ● | ● | ● | ● | ● | ● | ● | ● | ● | ● | ● | ● | ● | ● | ● | ● | ● | ● | ● | ● | ● | ● | ● | ● | ● | ● | ● | ● | ● |
| Bypass management kit | **KBP** | ● | ● | ● | ● | ● | ● | ● | ● | ● | ● | ● | ● | ● | ● | ● | ● | ● | ● | ● | ● | ● | ● | ● | ● | ● | ● | ● | ● | ● | ● | ● | ● |
| Additional filter pressure switch for return air filters | **PF** | ● | ● | ● | ● | ● | ● | ● | ● | ● | ● | ● | ● | ● | ● | ● | ● | ● | ● | ● | ● | ● | ● | ● | ● | ● | ● | ● | ● | ● | ● | ● | ● |
| Frost protection thermostat | **ATG** | | | ● | ● | | | ● | ● | | | ● | ● | | | ● | ● | | | ● | ● | | | ● | ● | | | ● | ● | | | ● | ● |
| Two-way valve kit with on/ off actuator | **V2O** | | | ● | ● | | | ● | ● | | | ● | ● | | | ● | ● | | | ● | ● | | | ● | ● | | | ● | ● | | | ● | ● |
| 3-way valve kit with modulating actuator | **V3M** | | | ● | ● | | | ● | ● | | | ● | ● | | | ● | ● | | | ● | ● | | | ● | ● | | | ● | ● | | | ● | ● |
| Bioxigen® sanitization system | **BIOX** | ● | ● | ● | ● | ● | ● | ● | ● | ● | ● | ● | ● | ● | ● | ● | ● | ● | ● | ● | ● | ● | ● | ● | ● | ● | ● | ● | ● | ● | ● | ● | ● |
| Modbus board for SIGB / Q | **SCMB** | ● | ● | ● | ● | ● | ● | ● | ● | ● | ● | ● | ● | ● | ● | ● | ● | ● | ● | ● | ● | ● | ● | ● | ● | ● | ● | ● | ● | ● | ● | ● | ● |
| Remote user terminal | **TUP** | ● | ● | ● | ● | ● | ● | ● | ● | ● | ● | ● | ● | ● | ● | ● | ● | ● | ● | ● | ● | ● | ● | ● | ● | ● | ● | ● | ● | ● | ● | ● | ● |
| CO2 sensor | **QSC/QSA** | ● | ● | ● | ● | | | | | ● | ● | ● | ● | | | | | ● | ● | ● | ● | | | | | ● | ● | ● | ● | | | | |
| Humidity sensor | **USD/USW** | | | | | ● | ● | ● | ● | | | | | ● | ● | ● | ● | | | | | ● | ● | ● | ● | | | | | ● | ● | ● | ● |
| Outdoor installation kit | **EXT** | | | | | | | | | | | | | | | | | ● | ● | ● | ● | ● | ● | ● | ● | ● | ● | ● | ● | ● | ● | ● | ● |

* Modbus RTU card Valid only for NECS control

# Nevalis Monosplit

## DC inverter winter specialist, Wi-Fi

2.6 kW÷7.0 kW

**SINGLE-SPLIT**

WINTER SPECIALIST -25°C | ECO ENERGY SAVING | TREATMENT GOLDEN FIN | WI-FI Standard USB Smart Kit | APP AVAILABLE NetHome Plus | AUTO RE-START | FUNCTION TIMER | SLEEP MODE 21.5 DB(A) | LED DISPLAY | OPERATING TEMPERATURE -25/+50°C | ADJUSTABLE SPEED

## Accessories

**Infrared remote control with wall mount**
Included

**Smart Kit USB**
Included

**Airset-C Wi-Fi remote control**
Accessory sold separately

**Heated Base**
Included

### Features

- **Winter specialist**: Thanks to its advanced technology, the Nevalis range is designed to operate with outdoor temperatures as low as -25°C, ensuring efficient heating even in the most extreme weather conditions. Ideal for cold climates, it provides consistent comfort, reduces energy consumption, and supports environmental sustainability, without compromising performance.
- **Golden Fin**: exclusive anti-corrosion coating that enables the finned heat exchanger coil to withstand salty air, rain, and other corrosive elements. In addition, it effectively prevents bacterial growth and improves thermal efficiency. The Golden Fin treatment also guarantees the maintenance of optimal performance over the long term.
- **Flash Cooling**: the outdoor units in this range, by exploiting high-frequency compressor start-up technology (new-generation inverter), make it possible to generate a strong flow of cold air in extremely short times, ensuring immediate cooling.
- **ECO Mode**: the Nevalis range is equipped with energy-saving ECO technology, which integrates perfectly with high-efficiency inverter technology. You can enjoy a pleasant level of cooling while significantly reducing energy consumption over an 8-hour period.
- **Maximum flexibility**: Thanks to continuous improvements made to the electronic and electrical components, the Nevalis range can operate with a particularly wide electrical voltage range. The minimum supply voltage is 90 V, while the maximum voltage is 270 V.
- **Silent Mode**: Through a function that can be activated using the supplied remote control, the indoor unit and the outdoor unit automatically adjust their operating frequency, ensuring maximum quietness.

## Example wiring diagram for single outdoor residential unit + indoor unit

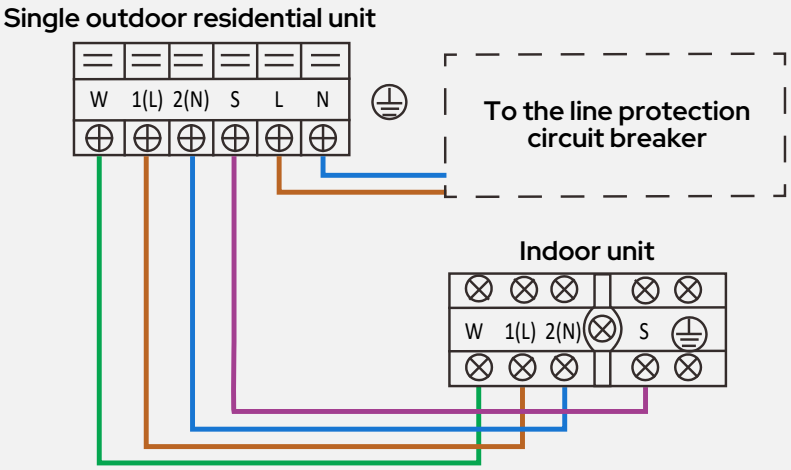


W: suggested but not mandatory

| | | | NVL26R + OUNVL26R | NVL35R + OUNVL35R | NVL53R + OUNVL53R | NVL70R + OUNVL70R |
|---|---|---|---|---|---|---|
| **Cooling** | Cooling capacity | kW | 2,6 (1,0~3,5) | 3,5 (1,4~4,0) | 5,0 (2,0~6,1) | 7,0 (2,2~8,8) |
| | | BTU/h | 9.000 | 12.000 | 17.060 | 23.884 |
| | Power input | kW | 0,628 | 1,035 | 1,39 | 2,12 |
| | Absorbed current | A | 4,4 | 4,7 | 6,04 | 9,21 |
| | E.E.R. | W/W | 4,2 | 3,4 | 3,6 | 3,3 |
| | S.E.E.R. - Energy Class | W/W | 8.8 - A+++ | 8.5 - A+++ | 8.5 - A+++ | 7.9 - A++ |
| **Heating** | Heating capacity | kW | 2,9 (0,8~3,7) | 3,8 (1,1~4,1) | 5,4 (1,4~6,8) | 7,3 (1,6~9,4) |
| | | BTU/h | 10.000 | 13.000 | 18.425 | 24.908 |
| | Power input | kW | 0,666 | 0,975 | 1,44 | 1,97 |
| | Absorbed current | A | 4,45 | 4,4 | 6,26 | 8,56 |
| | C.O.P. | W/W | 4,4 | 3,91 | 3,75 | 3,71 |
| | S.C.O.P. (2) | W/W | 4.6 - A++ | 4.6 - A++ | 4.6 - A++ | 4.6 - A++ |
| **Compressor** | Type | | Rotary Inverter | | | |
| | Number | | 1 | | | |
| | Refrigerant oil (type) | | ESTER OIL VG74 | | | |
| | Refrigerant oil (quantity) | ml | 280 | 280 | 440 | 620 |
| | Refrigerant circuits | | 1 | | | |
| **Refrigerant** | Type | | R32 | | | |
| | Refrigerant quantity | kg | 0,55 | 0,58 | 0,85 | 1,08 |
| | Refrigerant quantity in tons of CO2 equivalent (GWP) | Ton | 675 | | | |
| | Maximum length with standard charge | m | 5 | 5 | 5 | 5 |
| | Additional load | g/m | 12 | 12 | 12 | 24 |
| | Maximum height difference between outdoor unit and indoor unit | m | ≤ 10 | ≤ 10 | ≤ 20 | ≤ 25 |
| | Maximum length with additional charge | m | 25 | 25 | 30 | 50 |
| | Recommended minimum length | m | 3,5 | 3,5 | 3,5 | 3,5 |
| | Gas connections (1) | mm / inch | Ø9.53(3/8") | Ø9.53(3/8") | Ø12.7(1/2") | Ø12.7(1/2") |
| | Liquid connections | mm / inch | Ø6.35(1/4") | Ø6.35(1/4") | Ø6.35(1/4") | Ø6.35(1/4") |
| **Outdoor unit fans** | Type | | Axial with front discharge | | | |
| | Number | | 1 | | | |
| | Rotational speed | rpm | 800/600 | 780/600 | 700/530 | 830/550 |
| | Nominal air flow rate | $m^3/h$ | 2.200 | 2.200 | 3.500 | 3.500 |
| **Indoor unit fans** | Type | | Centrifugal with EC motor | | | |
| | Number | | 1 | | | |
| | Nominal air flow rate | $m^3/h$ | 650 / 510 / 360 / 285 / 150 | 800 / 600 / 450 / 370 / 220 | 950 / 800 / 600 / 470 / 340 | 1.150 / 1.090 / 790 / 635 / 445 |
| **Indoor unit heat exchanger** | Internal heat exchanger type | | Copper tube and aluminum fins | | | |
| | Nominal outside diameter | mm | 5 | | | |
| | Rows | no. | 2 | 2 | 2 | 2 |
| **Operating limits** | Outdoor temperature in cooling min/max | °C | -15 / +50 | | | |
| | Outdoor temperature in heating min/max | °C | -25 / +24 | | | |
| **Electrical data** | Power supply | V~, Ph, Hz | 230, 1, 50 | | | |
| | Maximum absorbed power | W | 2150 | 2150 | 2500 | 3500 |
| | Maximum absorbed current | A | 10 | 10 | 13 | 15,5 |
| **Sound data** | Sound pressure level of outdoor unit | dB(A) | 54 | 55 | 57 | 60 |
| | Sound power level of outdoor unit | dB(A) | 62 | 62 | 65 | 68 |
| | Indoor unit sound pressure level | dB(A) | 39 / 34 / 25 / 19 | 39 / 32 / 26 / 20 | 43 / 36 / 28 / 21.5 | 46 / 39.5 / 32.5 / 21.5 |
| | Indoor unit sound power level | dB(A) | 56 | 56 | 58 | 60 |
| **Dimensional data** | Net dimensions of indoor unit (WxHxD) | mm | 723x286x199 | 813x289x201 | 975x308x218 | 1.055x330x231 |
| | Net dimensions of outdoor unit (W x H x D) ** | mm | 765x555x303 | 765x555x303 | 890x673x342 | 890x673x342 |
| | Net weight of indoor unit | kg | 7,5 | 8 | 10,2 | 13 |
| | Net weight of outdoor unit | kg | 23,1 | 23,1 | 37,8 | 41 |

(1) Refer to the indoor units table for the piping section.
(2) Average climatic conditions / hot climatic conditions
Cooling test conditions: indoor 27°C d.b. / 19.5°C w.b. – outdoor 35°C d.b. / 24°C w.b. – Heating test conditions: indoor 20°C d.b. – outdoor 7°C d.b. / 6°C w.b.
For system power consumption, refer to the outdoor unit nameplate
** The width measurement does not include the connections.

## Price list

| | NVL26R | OUNVL26R | NVL35R | OUNVL35R | NVL53R | OUNVL53R | NVL70R | OUNVL70R |
|---|---|---|---|---|---|---|---|---|
| | IDU | ODU | IDU | ODU | IDU | ODU | IDU | ODU |
| **Code** | 01014224#1600260 | 01014224#1700261 | 01014224#1600350 | 01014224#1700351 | 01014224#1600530 | 01014224#1700531 | 01014224#1600700 | 01014224#1700701 |
| **€** | 325 | 542 | 379 | 546 | 514 | 992 | 626 | 1.384 |
| **€ IDU + ODU** | 867 | | 925 | | 1.506 | | 2.011 | |

| ACCESSORIES SUPPLIED SEPARATELY | | Code | € |
|---|---|---|---|
| AIRSET-C | Digital remote control with Wi-Fi. SEH-NVL accessory required | 011049#0100 | 169 |
| SEH-NVL | Hardware expansion board, remote ON/OFF control, alarm signalling and wired controller connection | 0101819#180035 | 54 |

# Lys R3 Monosplit

## DC inverter Wi-Fi

2.6 kW÷5.9 kW

**SINGLE-SPLIT**

ECO ENERGY SAVING | TREATMENT GOLDEN FIN | WI-FI Standard USB Smart Kit | APP AVAILABLE NetHome Plus | AUTO RE-START | FUNCTION TIMER | SLEEP MODE 21.5 DB(A) | LED DISPLAY | OPERATING TEMPERATURE -20/+50°C | ADJUSTABLE SPEED

## Accessories

**Infrared remote control with wall mount**
Included

**Smart Kit USB**
Included

### Features

- **Golden Fin**: exclusive anti-corrosion coating that enables the finned heat exchanger coil to withstand salty air, rain, and other corrosive elements. In addition, it effectively prevents bacterial growth and improves thermal efficiency. The Golden Fin treatment also guarantees the maintenance of optimal performance over the long term.
- **Flash Cooling**: the outdoor units in this range, by exploiting high-frequency compressor start-up technology (new-generation inverter), make it possible to generate a strong flow of cold air in extremely short times, ensuring immediate cooling.
- **ECO Mode**: the LYS R3 range is equipped with energy-saving ECO technology, which integrates seamlessly with high-efficiency inverter technology. You can enjoy a pleasant cooling effect while significantly reducing energy consumption over an 8-hour period.
- **Refrigerant leak detection**: the system automatically stops the operation of the air conditioner if a leak is detected in the refrigerant gas circuit.
- **High-efficiency heat exchangers**: the internal processing of the copper tubes has made it possible to increase the number of grooves from 45 to 54, resulting in an increase in heat exchange efficiency of over 7%.
- **Smart checks**: thanks to the dedicated function accessible via the app, it is possible to activate a procedure that tests up to 97 different functions of the air conditioner. The periodic check can also be performed directly by the end user.

## Example wiring diagram for single outdoor residential unit + indoor unit

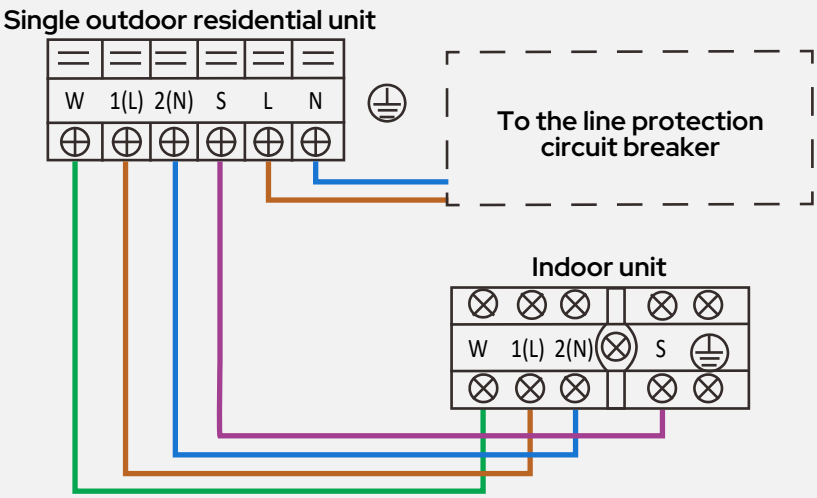


W: suggested but not mandatory

| | | | LDL26R3 + LDL26R3 | LDL35R3 + LDL35R3 | LDL53R3 + LDL53R3 | LDL70R3 + LDL70R3 |
|---|---|---|---|---|---|---|
| **Cooling** | Cooling capacity | kW | 2,64 | 3,22 | 5,27 | 5,86 |
| | | BTU/h | 9.000 | 12.000 | 18.000 | 24.000 |
| | Power input | kW | 0,80 | 0,99 | 1,55 | 1,80 |
| | Absorbed current | A | 3,48 | 4,3 | 6,7 | 7,86 |
| | E.E.R. | W/W | 3,30 | 3,25 | 3,40 | 3,25 |
| | S.E.E.R. - Energy Class | W/W | 7.0 - A++ | 7.1 - A++ | 7.4 - A++ | 6.1 - A++ |
| **Heating** | Heating capacity | kW | 2,49 | 3,30 | 4,97 | 6,00 |
| | | BTU/h | 8.500 | 13.000 | 19.000 | 25.000 |
| | Power input | kW | 0,67 | 0,88 | 1,29 | 1,60 |
| | Absorbed current | A | 2,9 | 3,8 | 5,64 | 6,99 |
| | C.O.P. | W/W | 3,71 | 3,78 | 3,85 | 3,75 |
| | S.C.O.P. (2) | W/W | 4.1 - A+ / A+++ | 4.1 - A+ / A+++ | 4.0 - A+ / A+++ | 4.0 - A+ / A+++ |
| **Compressor** | Type | | Rotary Inverter | | | |
| | Number | | 1 | | | |
| | Refrigerant oil (type) | | ESTER OIL VG74 | | | |
| | Refrigerant oil (quantity) | ml | 280 | 280 | 440 | 620 |
| | Refrigerant circuits | | 1 | | | |
| **Refrigerant** | Type | | R32 | | | |
| | Refrigerant quantity | kg | 0,47 | 0,52 | 1,08 | 1,42 |
| | Refrigerant quantity in tons of CO2 equivalent (GWP) | Ton | 675 | | | |
| | Maximum length with standard charge | m | 5 | 5 | 5 | 5 |
| | Additional load | g/m | 12 | 12 | 12 | 24 |
| | Maximum height difference between outdoor unit and indoor unit | m | ≤ 10 | ≤ 10 | ≤ 20 | ≤ 25 |
| | Maximum length with additional charge | m | 25 | 25 | 30 | 50 |
| | Recommended minimum length | m | 3,5 | 3,5 | 3,5 | 3,5 |
| | Gas connections (1) | mm / inch | Ø9.53(3/8") | Ø9.53(3/8") | Ø12.7(1/2") | Ø15,9(5/8") |
| | Liquid connections | mm / inch | Ø6.35(1/4") | Ø6.35(1/4") | Ø6.35(1/4") | Ø9.53(3/8") |
| **Outdoor unit fans** | Type | | Axial with front discharge | | | |
| | Number | | 1 | | | |
| | Rated power | W | 27.1 | 27.1 | 99.6 | 88.0 |
| | Rotational speed | rpm | 1100/900/750 | 1130/950/750 | 740/700/650 | 830/700/550 |
| | Nominal air flow rate | $m^3/h$ | 1750 | 1750 | 2100 | 3500 |
| **Indoor unit fans** | Type | | Centrifugal with EC motor | | | |
| | Number | | 1 | | | |
| | Nominal air flow rate | $m^3/h$ | 435/333/259 | 530/430/310 | 840/680/540 | 980/817/662 |
| **Indoor unit heat exchanger** | Internal heat exchanger type | | Copper tube and aluminum fins | | | |
| | Nominal outside diameter | mm | 5 | | | |
| | Rows | no. | 3 | 4 | 3 | 4 |
| **Operating limits** | Outdoor temperature in cooling min/max | °C | -15 / +50 | | | |
| | Outdoor temperature in heating min/max | °C | -20 / +30 | | | |
| **Electrical data** | Power supply | V~, Ph, Hz | 230, 1, 50 | | | |
| | Maximum absorbed power | W | 2150 | 2150 | 2500 | 3500 |
| | Maximum absorbed current | A | 10 | 10 | 13 | 15,5 |
| **Sound data** | Sound pressure level of outdoor unit | dB(A) | 55 | 54.5 | 56 | 59 |
| | Sound power level of outdoor unit | dB(A) | 59 | 64 | 63 | 67 |
| | Indoor unit sound pressure level | dB(A) | 37 / 32 / 25 / 21.5 | 39.5 / 35.5 / 25/ 21.5 | 42.5 / 36 / 26 | 45 / 40.5 / 36 |
| | Indoor unit sound power level | dB(A) | 50 | 54 | 56 | 59 |
| **Dimensional data** | Net dimensions of indoor unit (WxHxD) | mm | 715x285x194 | 805x285x194 | 957x302x213 | 1.040x327x220 |
| | Net dimensions of outdoor unit (W x H x D) ** | mm | 790x495x270 | 790x495x270 | 870x554x333 | 914702x363 |
| | Net weight of indoor unit | kg | 6,7 | 7,3 | 10 | 12,3 |
| | Net weight of outdoor unit | kg | 21 | 21 | 32,7 | 42,9 |

(1) Refer to the indoor units table for the piping section.
(2) Average climatic conditions / hot climatic conditions
Cooling test conditions: indoor 27°C d.b. / 19.5°C w.b. – outdoor 35°C d.b. / 24°C w.b. – Heating test conditions: indoor 20°C d.b. – outdoor 7°C d.b. / 6°C w.b.

For system power consumption, refer to the outdoor unit nameplate
** The width measurement does not include the connections.

## Price list

| | LDL26R3 | | LDL35R3 | | LDL53R3 | | LDL70R3 | |
|---|---|---|---|---|---|---|---|---|
| | IDU | ODU | IDU | ODU | IDU | ODU | IDU | ODU |
| **Code** | 01015224#0100260 | 01015224#0100261 | 01015224#0100350 | 01015224#0100351 | 01015224#0100530 | 01015224#0100531 | 01015224#0100700 | 01015224#0100701 |
| **€** | 259 | 436 | 300 | 458 | 488 | 726 | 605 | 1.103 |
| **€ IDU + ODU** | 695 | | 758 | | 1.214 | | 1.708 | |

# Total-One

## Multisplit with heat recovery

**Intelligent energy recovery system**
During summer operation, the outdoor unit normally transfers heat to the surrounding environment through the action of the fan. This heat represents a source of potential energy recovery and a definite economic saving.
Finally, MAXA, with the **Total-One system**, allows residential or small commercial installations to take advantage of the major opportunity offered by summer energy recovery.
The **Total-One system**, through the exclusive combination of an innovative refrigeration circuit and advanced electronic control, makes it possible to activate, in addition to the usual operating modes of all air conditioners, also domestic hot water production modes with recovery of condensation heat.
Ultimately, the **domestic hot water can be produced free of charge by exploiting the heat** which would otherwise be dissipated outdoors.

| A+ | | | | | |
|---|---|---|---|---|---|
| ENERGY EFFICIENCY CLASS | DC INVERTER TECHNOLOGY | WI-FI | APP AVAILABLE NetHome Plus | OPERATING TEMPERATURE -15/+50°C | APPLICATION FLEXIBILITY |

### Smart heat recovery

Total-One features a function, enabled via the control located on the onboard internal tank unit, that allows the system to increase the domestic hot water setpoint up to the maximum available value. This function therefore checks whether the DHW temperature set by the user has actually been reached and, at the same time, whether recovery energy is available. If this condition is met, the system decides to optimize energy recovery by automatically raising the setpoint.

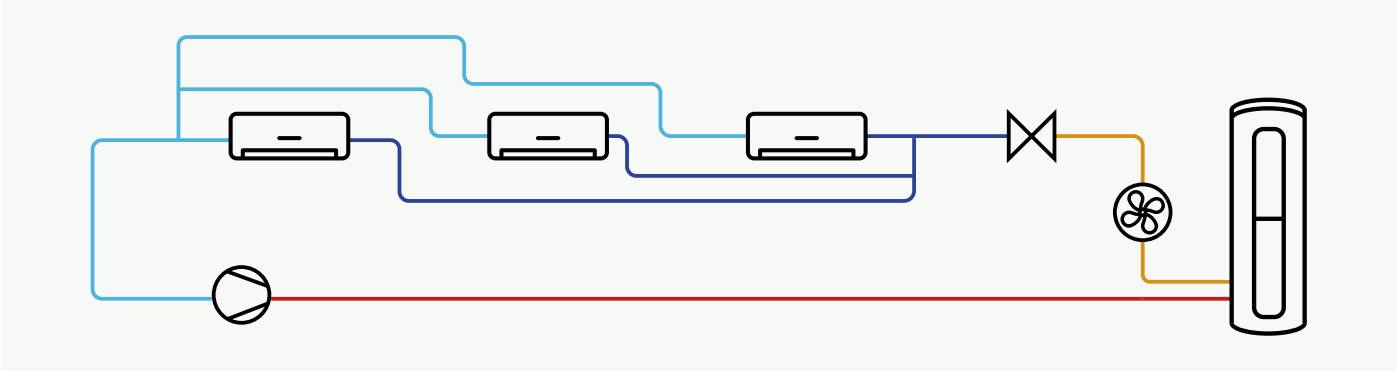

### Operating principle

When the indoor units are switched on in cooling mode and the refrigerant gas reaches an appropriate temperature, the internal control system sends the hot gas to the heat exchanger of the glass-lined steel tank.
At this point, the hot gas completes its condensation process, transferring a large amount of energy to the water contained inside the tank.

It should be emphasized that this heat exchange technology is highly advanced and, above all, extremely safe with regard to the quality of the water contained in the tank.
When the heat to be dissipated is greater than what is required by the tank, the system sends the excess energy to the outdoor unit to complete the gas condensation phase.

When the domestic hot water tank has reached the desired temperature, all the condensation heat is dissipated outdoors, as in a traditional air conditioner.

If, on the other hand, the cooling system is not operating but there is a need to heat the domestic hot water tank, the outdoor unit starts operating in heating mode for the sole purpose of restoring the temperature inside the tank.

## Available operating modes

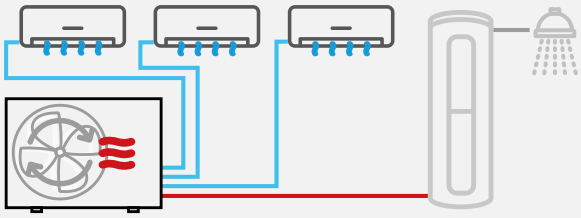

### Cooling only

High-quality summer cooling is always guaranteed even in the absence of the domestic hot water storage tank.

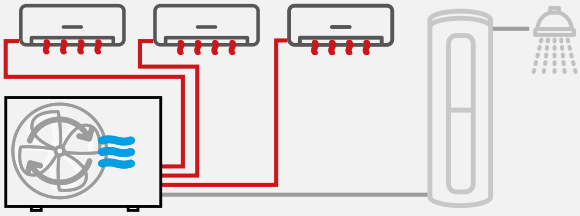

### Heating only

During winter heating, the connected indoor units provide comfortable room conditions even if the domestic hot water tank is not connected.

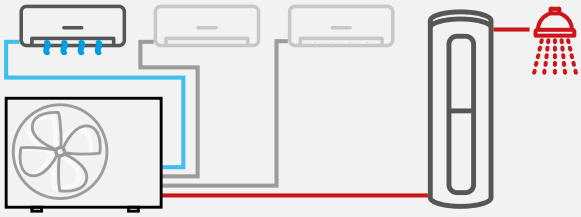

### Air conditioning with total heat recovery

When the thermal energy extracted from the indoor spaces can be transferred entirely to the domestic hot water, the outdoor fan switches off and the system operates in total energy recovery mode.

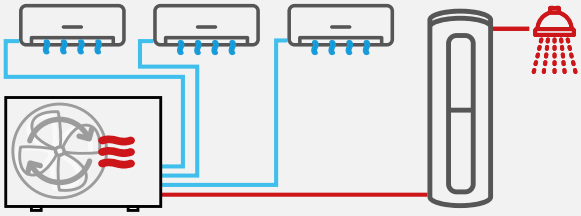

### Air conditioning with partial heat recovery

When all indoor units operate simultaneously, part of the energy heats the domestic hot water. The excess energy is dissipated by the outdoor unit.

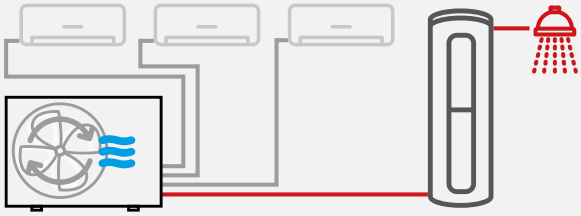

### DHW-only production

Domestic hot water production is ensured even if no indoor unit is connected or when no indoor unit is operating.

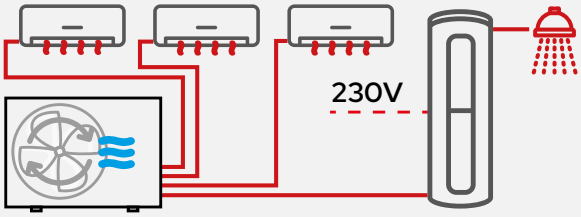


### Heating and DHW production

If the environmental conditions allow, the indoor units and the DHW tank can operate simultaneously, allowing space heating while at the same time heating the domestic hot water. Alternatively, the system assigns all available capacity with priority to the DHW tank.

### Range of Compatible Indoor Units

The technical data of the compatible indoor units are provided in the residential multisplit section.

Nevalis



Lys

Console

Cassettes

Ducted

# Total-One Outdoor Units

## Multisplit DC inverter with heat recovery

5,2 kW÷7,9 kW

**MULTISPLIT WITH HEAT RECOVERY**

| | | | EXT3M53HR | EXT4M80HR1 | EXT4M80HR2 |
|---|---|---|---|---|---|
| | Connectable indoor units | | 2 + 1 | 3 + 1 | 3 + 1 |
| **Cooling** | Nominal cooling capacity | kW | 5,2 | 7,9 | 7,9 |
| | | BTU/h | 18.000 | 27.000 | 27.000 |
| | Power input | kW | 1,582 | 2,45 | 2,45 |
| | Absorbed current | A | 7,0 | 11 | 11 |
| | E.E.R. * | W/W | 3,35 | 3,55 | 3,55 |
| | S.E.E.R. | W/W | 6,1 | 6,3 | 6,3 |
| **Heating** | Rated heating capacity | kW | 5,2 | 8,2 | 8,2 |
| | | BTU/h | 18.000 | 28.000 | 28.000 |
| | Power input | kW | 1,429 | 2,2 | 2,2 |
| | Absorbed current | A | 6,4 | 10,5 | 10,5 |
| | C.O.P. * | W/W | 3,71 | 3,81 | 3,81 |
| | S.C.O.P. Medium range | W/W | 4,1 | 4,1 | 4,1 |
| | S.C.O.P. Warm climate zone | W/W | 5,2 | 5,1 | 5,1 |
| **Compressor** | Type | | Rotary Inverter | | |
| | Number | | 1 | | |
| | Refrigerant oil (type) | | VG74 | | |
| | Refrigerant oil (quantity) | ml | 450 | 620 | 620 |
| **Power supply** | Power supply | V~, Ph, Hz | 230, 1, 50 | | |
| **Refrigerant** | Type | | R32 | | |
| | Refrigerant quantity | kg | 1,57 | 1,8 | 1,8 |
| | Refrigerant quantity in tons of CO2 equivalent (GWP) | Ton | 675 | | |
| | Maximum length with standard charge | m | 15 | 15 | 15 |
| | Additional load | g/m | 12 | 12 | 12 |
| | Maximum height difference between outdoor unit and indoor unit | m | 15 | 15 | 15 |
| | Maximum length for each unit | m | 30 (20m for DHW) | 35 (20m for DHW) | 35 (20m for DHW) |
| | Height difference between indoor units | m | 10 | 10 | 10 |
| | Minimum recommended line length | m | 5 | 5 | 5 |
| | Maximum length for all indoor units | m | 60 (20m for DHW) | 80 (20m for DHW) | 80 (20m for DHW) |
| | Gas connections | mm | 3x9.52 | 3X9.52+1x12.7 | 3X9.52+1x12.7 |
| | | inch | 3x3/8" | 3x3/8"+1x1/2" | 3x3/8"+1x1/2" |
| | Liquid connections | mm | 3x6.35 | 4x6.35 | 4x6.35 |
| | | inch | 3x1/4" | 4x1/4" | 4x1/4" |
| **Fans** | Type | | Axial | | |
| | Number | | 1 | | |
| | Rated power | W | 80 | 120 | 120 |
| | Nominal air flow rate | $m^3/h$ | 3000 | 4000 | 4000 |
| **Operating limits** | Outdoor temperature in cooling min/max | °C | -15~50 | -15~50 | -15~50 |
| | Outdoor temperature in heating min/max | °C | -15~24 | -15~24 | -15~24 |
| **Sound data** | Sound pressure level of outdoor unit | dB(A) | 60 | 62 | 62 |
| | Sound power level of outdoor unit | dB(A) | 65 | 66 | 66 |
| **Dimensional data** | Outdoor unit dimensions (WxHxD) | mm | 890x673x342 | 946x810x410 | 946x810x410 |
| | Net weight of outdoor unit | kg | 46,6 | 64,3 | 64,3 |
| | Gross weight of outdoor unit | kg | 50,3 | 68,6 | 68,6 |

* Indoor units size 26.

# DHW Tanks Total-One

## R32 indoor unit for domestic hot water production

100, 190 l

**MULTISPLIT WITH HEAT RECOVERY**

STANDARD WI-FI

APP AVAILABLE NetHome Plus

| | | | TNK100HR | TNK190HR | TNK190HR1 |
|---|---|---|---|---|---|
| | Compatible outdoor unit | | EXT3M53HR EXT4M80HR1 EXT4M80HR2 | EXT4M80HR1 | EXT4M80HR2 |
| | Field of application | | From -15°C to +43°C | | |
| | Refrigerant connections (inch) | | 1/4" + 3/8" | 1/4" + 3/8" | 1/4" + 3/8" |
| | DHW setpoint temperature (with resistance enabled) | °C | 38 ~ 55 (70) | 38 ~ 55 (70) | 38 ~ 55 (70) |
| | Tank corrosion protection | | Magnesium anode | | |
| | Building material | | Enamelled steel | | |
| | Net internal volume Litres | | 100 | 190 | 190 |
| | Power supply | Ph-V-Hz | 1ph/220~240V/50Hz | | |
| **DHW performance according to standard EN 16147:2017** | Load profile | | M | L | L |
| | Rated DHW power | kW | 2,6 | 3,9 | 3,9 |
| | COP dhw | | 3,4 | 3,4 | 3,4 |
| | DHW setpoint test | °C | 52 | 52 | 52 |
| | Maximum draw-off with DHW = 40°C | l | 120 L | 240 L | 240 L |
| | Energy Class | | A+ | A+ | A+ |
| | Standby absorption | W | 50 | 50 | 50 |
| | Maximum tank pressure | bar | 10 | 10 | 10 |
| | Protection system | | Magnesium sacrificial anode | | |
| | Type of material | | Vitreous enamel steel | | |
| | Integration mode | | 2kW electric heater | | |
| **DHW production only data** | Water heating capacity * | | 3,0 | 4,0 | 4,0 |
| | COP * | | 3,9 | 3,9 | 3,9 |
| **Dimensional data** | Dimensions (HxWxD) | mm | 1.060*500*556 | 1660*504*574 | 1660*504*574 |
| | Net weight | kg | 45 | 70 | 70 |
| **Electrical data** | Electrical wiring | | 2+Earth | 2+Earth | 2+Earth |
| | Recommended minimum power supply section | $mm^2$ | 1,5 | 1,5 | 1,5 |
| | Electric heating element power | kW | 2 | 2 | 2 |
| | Current electric resistance | A | 9,1 | 9,1 | 9,1 |
| | Wiring section to the outdoor unit | $mm^2$ | 1.0 x 3 + Earth | 1.0 x 3 + Earth | 1.0 x 3 + Earth |

*air inlet 15°C, air outlet 12°C, water inlet 15°C, water outlet 45°C

## Price list

| | EXT3M53HR | EXT4M80HR1 | EXT4M80HR2 | TNK100HR | TNK190HR | TNK190HR1 |
|---|---|---|---|---|---|---|
| **Code** | 0103223#0500531 | 0103223#0581001 | 0103223#0583001 | 0103323#0006901 | 0103323#0006701 | 0103323#0008201 |
| **€** | 2.440 | 2.705 | 2.705 | 1.962 | 2.228 | 2.228 |

# Cooling and Heating Output Tables for Each Combination

## EXT3M53HR — Cooling

| Sizes | Rated Power (kW) | | Power Range (kW) | | | Power Input (kW) | | |
|---|---|---|---|---|---|---|---|---|
| | A | B | Min. | Medium | Max. | Min. | Medium | Max. |
| 20+20 | 1,99 | 1,99 | 1,20 | 3,98 | 4,38 | 0,15 | 1,03 | 1,23 |
| 20+26 | 2,01 | 2,59 | 1,38 | 4,60 | 5,06 | 0,18 | 1,21 | 1,46 |
| 20+35 | 1,97 | 3,38 | 1,60 | 5,35 | 5,88 | 0,21 | 1,39 | 1,67 |
| 20+53 | 1,50 | 3,85 | 1,60 | 5,35 | 5,88 | 0,21 | 1,41 | 1,69 |
| 26+26 | 2,65 | 2,65 | 1,59 | 5,30 | 5,83 | 0,22 | 1,46 | 1,75 |
| 26+35 | 2,29 | 3,05 | 1,60 | 5,35 | 5,88 | 0,21 | 1,39 | 1,67 |
| 26+53 | 1,78 | 3,57 | 1,60 | 5,35 | 5,88 | 0,21 | 1,41 | 1,69 |
| 35+35 | 2,66 | 2,66 | 1,60 | 5,32 | 5,85 | 0,20 | 1,32 | 1,58 |
| 35+53 | 2,12 | 3,18 | 1,59 | 5,29 | 5,82 | 0,20 | 1,34 | 1,61 |

## EXT3M53HR — Heating

| Sizes | Power Range (kW) | | | Power Input (kW) | | | Absorbed Current Range (A) | | |
|---|---|---|---|---|---|---|---|---|---|
| | Min. | Medium | Max. | Min. | Medium | Max. | Min. | Medium | Max. |
| 20+20 | 1,23 | 4,11 | 4,52 | 0,13 | 0,89 | 1,06 | 0,29 | 3,74 | 4,53 |
| 20+26 | 1,44 | 4,79 | 5,27 | 0,16 | 1,07 | 1,28 | 0,35 | 4,50 | 5,46 |
| 20+35 | 1,62 | 5,40 | 5,94 | 0,19 | 1,24 | 1,49 | 0,41 | 5,24 | 6,35 |
| 20+53 | 1,63 | 5,44 | 5,98 | 0,19 | 1,26 | 1,52 | 0,41 | 5,33 | 6,47 |
| 26+26 | 1,62 | 5,40 | 5,94 | 0,19 | 1,26 | 1,51 | 0,41 | 5,30 | 6,42 |
| 26+35 | 1,62 | 5,40 | 5,94 | 0,19 | 1,24 | 1,49 | 0,41 | 5,24 | 6,35 |
| 26+53 | 1,63 | 5,44 | 5,98 | 0,19 | 1,26 | 1,52 | 0,41 | 5,33 | 6,47 |
| 35+35 | 1,62 | 5,39 | 5,93 | 0,18 | 1,23 | 1,48 | 0,40 | 5,19 | 6,30 |
| 35+53 | 1,63 | 5,43 | 5,97 | 0,19 | 1,26 | 1,51 | 0,41 | 5,31 | 6,44 |

## EXT4M80HR — Cooling

| Sizes | Rated Power (kW) | | | Power Range (kW) | | | Power Input (kW) | | |
|---|---|---|---|---|---|---|---|---|---|
| | A | B | C | Min. | Medium | Max. | Min. | Medium | Max. |
| 20+20 | 2,04 | 2,04 | | 1,22 | 4,08 | 4,48 | 0,16 | 1,08 | 1,30 |
| 20+26 | 2,07 | 2,66 | | 1,42 | 4,72 | 5,20 | 0,19 | 1,29 | 1,55 |
| 20+35 | 2,05 | 3,52 | | 1,67 | 5,57 | 6,13 | 0,23 | 1,51 | 1,82 |
| 20+53 | 2,06 | 5,30 | | 2,21 | 7,37 | 8,10 | 0,33 | 2,22 | 2,67 |
| 20+71 | 1,79 | 6,12 | | 2,37 | 7,91 | 8,70 | 0,37 | 2,48 | 2,97 |
| 26+26 | 2,60 | 2,60 | | 1,56 | 5,20 | 5,72 | 0,22 | 1,49 | 1,79 |
| 26+35 | 2,64 | 3,53 | | 1,85 | 6,17 | 6,79 | 0,27 | 1,77 | 2,13 |
| 26+53 | 2,54 | 5,09 | | 2,29 | 7,63 | 8,39 | 0,36 | 2,41 | 2,89 |
| 35+35 | 3,51 | 3,51 | | 2,11 | 7,02 | 7,72 | 0,30 | 2,03 | 2,44 |
| 35+53 | 3,17 | 4,75 | | 2,38 | 7,92 | 8,72 | 0,36 | 2,42 | 2,91 |
| 26+26+26 | 2,64 | 2,64 | 2,64 | 2,37 | 7,91 | 8,70 | 0,37 | 2,45 | 2,94 |
| 26+26+35 | 2,39 | 2,39 | 3,18 | 2,39 | 7,96 | 8,76 | 0,36 | 2,37 | 2,85 |
| 26+26+53 | 2,00 | 2,00 | 3,99 | 2,39 | 7,98 | 8,78 | 0,36 | 2,38 | 2,85 |
| 26+35+35 | 2,17 | 2,90 | 2,90 | 2,39 | 7,97 | 8,77 | 0,34 | 2,30 | 2,76 |
| 26+35+53 | 1,84 | 2,45 | 3,68 | 2,39 | 7,96 | 8,76 | 0,34 | 2,30 | 2,76 |
| 35+35+35 | 2,64 | 2,64 | 2,64 | 2,38 | 7,93 | 8,73 | 0,33 | 2,21 | 2,66 |

## EXT4M80HR — Heating

| Sizes | Rated Power (kW) | | | Power Range (kW) | | | Power Input (kW) | | | Absorbed Current Range (A) | | |
|---|---|---|---|---|---|---|---|---|---|---|---|---|
| | A | B | C | Min. | Medium | Max. | Min. | Nominal | Max. | Min. | Medium | Max. |
| 20+20 | 2,05 | 2,05 | | 1,23 | 4,10 | 4,51 | 0,16 | 1,09 | 1,31 | 0,36 | 4,60 | 5,58 |
| 20+26 | 2,01 | 2,59 | | 1,38 | 4,60 | 5,06 | 0,19 | 1,25 | 1,50 | 0,41 | 5,27 | 6,39 |
| 20+35 | 2,03 | 3,48 | | 1,65 | 5,50 | 6,05 | 0,22 | 1,48 | 1,78 | 0,48 | 6,25 | 7,58 |
| 20+53 | 2,04 | 5,25 | | 2,19 | 7,28 | 8,01 | 0,30 | 1,97 | 2,37 | 0,64 | 8,32 | 10,09 |
| 20+71 | 1,84 | 6,30 | | 2,44 | 8,14 | 8,95 | 0,37 | 2,44 | 2,93 | 0,80 | 10,29 | 12,48 |
| 26+26 | 2,74 | 2,74 | | 1,65 | 5,49 | 6,04 | 0,23 | 1,53 | 1,84 | 0,50 | 6,46 | 7,83 |
| 26+35 | 2,76 | 3,67 | | 1,93 | 6,43 | 7,07 | 0,28 | 1,88 | 2,25 | 0,61 | 7,91 | 9,59 |
| 26+53 | 2,69 | 5,37 | | 2,42 | 8,06 | 8,87 | 0,36 | 2,39 | 2,87 | 0,78 | 10,08 | 12,22 |
| 35+35 | 3,72 | 3,72 | | 2,23 | 7,45 | 8,19 | 0,35 | 2,30 | 2,76 | 0,75 | 9,71 | 11,77 |
| 35+53 | 3,31 | 4,97 | | 2,48 | 8,28 | 9,11 | 0,37 | 2,47 | 2,96 | 0,80 | 10,40 | 12,60 |
| 26+26+26 | 2,74 | 2,74 | 2,74 | 2,46 | 8,21 | 9,03 | 0,33 | 2,21 | 2,65 | 0,72 | 9,33 | 11,31 |
| 26+26+35 | 2,46 | 2,46 | 3,29 | 2,46 | 8,21 | 9,04 | 0,33 | 2,20 | 2,65 | 0,72 | 9,30 | 11,27 |
| 26+26+53 | 2,06 | 2,06 | 4,12 | 2,47 | 8,24 | 9,07 | 0,32 | 2,11 | 2,53 | 0,69 | 8,89 | 10,78 |
| 26+35+35 | 2,24 | 2,99 | 2,99 | 2,47 | 8,22 | 9,04 | 0,33 | 2,20 | 2,64 | 0,72 | 9,27 | 11,24 |
| 26+35+53 | 1,90 | 2,54 | 3,81 | 2,47 | 8,25 | 9,07 | 0,32 | 2,10 | 2,52 | 0,69 | 8,86 | 10,74 |
| 35+35+35 | 2,75 | 2,75 | 2,75 | 2,47 | 8,24 | 9,07 | 0,33 | 2,18 | 2,62 | 0,71 | 9,19 | 11,15 |

## Cooling — EXT3M53HR

| Absorbed Current Range (A) | | | EER (W/W) | Pdesignc | SEER | kWh/year | Class energy | Sizes |
|---|---|---|---|---|---|---|---|---|
| Min. | Medium | Max. | | | | | | |
| 0,33 | 4,32 | 5,24 | 3,89 | 3,98 | 6,87 | 203 | A++ | 20+20 |
| 0,40 | 5,12 | 6,21 | 3,79 | 4,60 | 6,80 | 237 | A++ | 20+26 |
| 0,45 | 5,86 | 7,11 | 3,84 | 5,35 | 6,79 | 276 | A++ | 20+35 |
| 0,46 | 5,95 | 7,22 | 3,79 | 5,35 | 6,45 | 290 | A++ | 20+53 |
| 0,48 | 6,16 | 7,47 | 3,63 | 5,30 | 6,70 | 277 | A++ | 26+26 |
| 0,45 | 5,86 | 7,11 | 3,84 | 5,35 | 6,79 | 276 | A++ | 26+35 |
| 0,46 | 5,95 | 7,22 | 3,79 | 5,35 | 6,45 | 290 | A++ | 26+53 |
| 0,43 | 5,56 | 6,74 | 4,04 | 5,32 | 6,88 | 271 | A++ | 35+35 |
| 0,44 | 5,64 | 6,84 | 3,96 | 5,29 | 6,45 | 287 | A++ | 35+53 |

## Heating — EXT3M53HR

| COP (W/W) | Pdesignh *(average climate)* | SCOP *(average climate)* | kWh/year *(average climate)* | Energy Class *(average climate)* | Declared Capacity -10°C (kW) | Integrative capacity -10°C (kW) | Pdesignh *(warmer)* | SCOP *(warmer)* | kWh/year *(warmer)* | Energy Class *(warmer)* | Sizes |
|---|---|---|---|---|---|---|---|---|---|---|---|
| 4,63 | 4,01 | 4,61 | 1217 | A++ | 4,00 | 0,01 | 3,99 | 5,20 | 1076 | A+++ | 20+20 |
| 4,49 | 4,26 | 4,61 | 1296 | A++ | 4,10 | 0,17 | 4,52 | 5,17 | 1224 | A+++ | 20+26 |
| 4,34 | 4,58 | 4,58 | 1399 | A+ | 4,40 | 0,18 | 4,99 | 5,21 | 1342 | A+++ | 20+35 |
| 4,30 | 4,57 | 4,48 | 1430 | A+ | 4,40 | 0,17 | 5,00 | 5,28 | 1327 | A+++ | 20+53 |
| 4,30 | 4,60 | 4,60 | 1400 | A++ | 4,43 | 0,17 | 5,00 | 5,20 | 1346 | A+++ | 26+26 |
| 4,34 | 4,58 | 4,60 | 1394 | A++ | 4,40 | 0,18 | 4,99 | 5,21 | 1342 | A+++ | 26+35 |
| 4,30 | 4,57 | 4,48 | 1430 | A+ | 4,40 | 0,17 | 5,00 | 5,28 | 1327 | A+++ | 26+53 |
| 4,38 | 4,56 | 4,59 | 1390 | A+ | 4,38 | 0,18 | 4,98 | 5,21 | 1339 | A+++ | 35+35 |
| 4,31 | 4,60 | 4,55 | 1414 | A+ | 4,41 | 0,19 | 4,99 | 5,26 | 1328 | A+++ | 35+53 |

## Cooling — EXT4M80HR

| Absorbed Current Range (A) | | | EER (W/W) | Pdesignc | SEER | kWh/year | Class energy | Sizes |
|---|---|---|---|---|---|---|---|---|
| Min. | Medium | Max. | | | | | | |
| 0,35 | 4,57 | 5,54 | 3,76 | 4,08 | 6,46 | 221 | A++ | 20+20 |
| 0,42 | 5,46 | 6,62 | 3,65 | 4,72 | 6,39 | 259 | A++ | 20+26 |
| 0,49 | 6,39 | 7,74 | 3,68 | 5,57 | 6,47 | 302 | A++ | 20+35 |
| 0,73 | 9,38 | 11,37 | 3,31 | 7,37 | 6,03 | 428 | A+ | 20+53 |
| 0,81 | 10,44 | 12,66 | 3,19 | 7,91 | 6,03 | 459 | A+ | 20+71 |
| 0,49 | 6,29 | 7,63 | 3,48 | 5,20 | 6,32 | 288 | A++ | 26+26 |
| 0,58 | 7,48 | 9,07 | 3,48 | 6,17 | 6,37 | 339 | A++ | 26+35 |
| 0,78 | 10,15 | 12,31 | 3,17 | 7,63 | 5,90 | 453 | A+ | 26+53 |
| 0,66 | 8,56 | 10,38 | 3,46 | 7,02 | 6,35 | 387 | A++ | 35+35 |
| 0,79 | 10,22 | 12,39 | 3,27 | 7,92 | 6,00 | 463 | A+ | 35+53 |
| 0,80 | 10,33 | 12,53 | 3,23 | 7,91 | 6,30 | 440 | A++ | 26+26+26 |
| 0,77 | 10,02 | 12,14 | 3,35 | 7,96 | 6,38 | 436 | A++ | 26+26+35 |
| 0,78 | 10,03 | 12,16 | 3,35 | 7,98 | 6,28 | 445 | A++ | 26+26+53 |
| 0,75 | 9,68 | 11,74 | 3,47 | 7,97 | 6,46 | 432 | A++ | 26+35+35 |
| 0,75 | 9,69 | 11,75 | 3,46 | 7,96 | 6,40 | 435 | A++ | 26+35+53 |
| 0,72 | 9,34 | 11,32 | 3,58 | 7,93 | 6,60 | 421 | A++ | 35+35+35 |

## Heating — EXT4M80HR

| COP (W/W) | Pdesignh *(average climate)* | SCOP *(hotter)* | kWh/year *(average climate)* | Energy Class *(average climate)* | Declared Capacity -10°C (kW) | Integrative capacity -10°C (kW) | Pdesignh *(warmer)* | SCOP *(warmer)* | kWh/year *(warmer)* | Energy Class *(hotter)* | Sizes |
|---|---|---|---|---|---|---|---|---|---|---|---|
| 3,76 | 3,09 | 3,45 | 1252 | A | - | - | 3,16 | 4,74 | 933 | A++ | 20+20 |
| 3,69 | 3,57 | 3,59 | 1396 | A | - | - | 3,62 | 4,83 | 1050 | A++ | 20+26 |
| 3,71 | 4,21 | 3,83 | 1542 | A | - | - | 4,32 | 5,06 | 1194 | A++ | 20+35 |
| 3,69 | 5,56 | 4,07 | 1914 | A+ | - | - | 5,70 | 5,17 | 1544 | A+++ | 20+53 |
| 3,34 | 6,04 | 4,02 | 2106 | A+ | - | - | 6,20 | 4,92 | 1764 | A++ | 20+71 |
| 3,58 | 4,64 | 3,77 | 1721 | A | 4,60 | 0,04 | 4,80 | 4,78 | 1407 | A++ | 26+26 |
| 3,43 | 5,18 | 3,89 | 1866 | A | 5,17 | 0,01 | 5,32 | 4,77 | 1561 | A++ | 26+35 |
| 3,37 | 6,11 | 3,95 | 2165 | A | 5,89 | 0,23 | 6,19 | 4,99 | 1737 | A++ | 26+53 |
| 3,23 | 5,73 | 3,92 | 2049 | A | 5,50 | 0,23 | 5,81 | 4,83 | 1684 | A++ | 35+35 |
| 3,36 | 6,21 | 3,96 | 2195 | A | 5,95 | 0,26 | 6,35 | 5,03 | 1767 | A++ | 35+53 |
| 3,71 | 6,20 | 4,10 | 2117 | A+ | 5,95 | 0,25 | 6,30 | 5,10 | 1729 | A+++ | 26+26+26 |
| 3,73 | 6,21 | 4,10 | 2117 | A+ | 5,95 | 0,25 | 6,31 | 5,10 | 1730 | A+++ | 26+26+35 |
| 3,91 | 6,19 | 4,04 | 2145 | A+ | 5,95 | 0,25 | 6,31 | 5,21 | 1694 | A+++ | 26+26+53 |
| 3,74 | 6,21 | 4,11 | 2118 | A+ | 5,96 | 0,26 | 6,31 | 5,11 | 1731 | A+++ | 26+35+35 |
| 3,93 | 6,20 | 4,04 | 2146 | A+ | 5,95 | 0,25 | 6,31 | 5,11 | 1731 | A+++ | 26+35+53 |
| 3,78 | 6,22 | 4,11 | 2119 | A+ | 5,96 | 0,26 | 6,32 | 5,11 | 1733 | A+++ | 35+35+35 |

## Nominal Heating Output Tables

| EXT3M53HR + 2 indoor units tag. 26 | | | | | | | | | | | | | | |
|---|---|---|---|---|---|---|---|---|---|---|---|---|---|---|
| Indoor | Outdoor temperature (db, °C) | | | | | | | | | | | | | |
| | -20 | | -15 | | -10 | | -7 | | 2 | | 7 | | 10 | |
| dB, °C | Pt | Pe | Pt | Pe | Pt | Pe | Pt | Pe | Pt | Pe | Pt | Pe | Pt | Pe |
| 15 | 2,73 | 1,26 | 2,89 | 1,25 | 3,17 | 1,22 | 3,44 | 1,20 | 4,04 | 1,17 | 5,46 | 1,33 | 5,19 | 1,20 |
| 18 | 2,69 | 1,28 | 2,85 | 1,27 | 3,12 | 1,24 | 3,39 | 1,21 | 3,98 | 1,19 | 5,38 | 1,35 | 5,11 | 1,21 |
| 20 | 2,65 | 1,30 | 2,81 | 1,29 | 3,07 | 1,26 | 3,34 | 1,23 | 3,92 | 1,21 | 5,30 | 1,37 | 5,04 | 1,23 |
| 22 | 2,60 | 1,31 | 2,75 | 1,30 | 3,01 | 1,27 | 3,27 | 1,25 | 3,84 | 1,22 | 5,19 | 1,38 | 4,93 | 1,25 |
| 24 | 2,57 | 1,33 | 2,72 | 1,31 | 2,98 | 1,29 | 3,24 | 1,26 | 3,80 | 1,23 | 5,14 | 1,40 | 4,88 | 1,26 |
| 25 | 2,54 | 1,33 | 2,70 | 1,32 | 2,95 | 1,29 | 3,21 | 1,26 | 3,77 | 1,24 | 5,09 | 1,40 | 4,83 | 1,26 |
| 27 | 2,52 | 1,35 | 2,67 | 1,33 | 2,92 | 1,30 | 3,17 | 1,28 | 3,73 | 1,25 | 5,04 | 1,42 | 4,78 | 1,28 |

| EXT4M80HR + 3 indoor units size 26 | | | | | | | | | | | | | | |
|---|---|---|---|---|---|---|---|---|---|---|---|---|---|---|
| Indoor | Outdoor temperature (db, °C) | | | | | | | | | | | | | |
| | -20 | | -15 | | -10 | | -7 | | 2 | | 7 | | 10 | |
| dB, °C | Pt | Pe | Pt | Pe | Pt | Pe | Pt | Pe | Pt | Pe | Pt | Pe | Pt | Pe |
| 15 | 4,22 | 2,04 | 4,48 | 2,02 | 4,90 | 1,97 | 5,32 | 1,93 | 6,25 | 1,89 | 8,45 | 2,14 | 8,02 | 1,93 |
| 18 | 4,16 | 2,07 | 4,41 | 2,05 | 4,83 | 2,00 | 5,24 | 1,96 | 6,16 | 1,92 | 8,32 | 2,18 | 7,91 | 1,96 |
| 20 | 4,10 | 2,10 | 4,35 | 2,08 | 4,76 | 2,03 | 5,17 | 1,99 | 6,07 | 1,94 | 8,20 | 2,21 | 7,79 | 1,99 |
| 22 | 4,02 | 2,12 | 4,26 | 2,10 | 4,66 | 2,05 | 5,06 | 2,01 | 5,95 | 1,96 | 8,04 | 2,23 | 7,63 | 2,01 |
| 24 | 3,98 | 2,14 | 4,22 | 2,12 | 4,61 | 2,07 | 5,01 | 2,03 | 5,89 | 1,98 | 7,95 | 2,25 | 7,56 | 2,03 |
| 25 | 3,94 | 2,15 | 4,17 | 2,13 | 4,57 | 2,08 | 4,96 | 2,04 | 5,83 | 1,99 | 7,87 | 2,27 | 7,48 | 2,04 |
| 27 | 3,90 | 2,17 | 4,13 | 2,15 | 4,52 | 2,10 | 4,91 | 2,06 | 5,76 | 2,01 | 7,79 | 2,29 | 7,40 | 2,06 |

## Nominal Cooling Capacity Tables

| EXT3M53HR + 2 indoor units tag. 26 | | | | | | | | | | | | | | | | |
|---|---|---|---|---|---|---|---|---|---|---|---|---|---|---|---|---|
| Indoor | | Outdoor temperature (db, °C) | | | | | | | | | | | | | | |
| | | 20 | | | 25 | | | 30 | | | 35 | | | 40 | | |
| dB, °C | wb, °C | Pt | Ps | Pe | Pt | Ps | Pe | Pt | Ps | Pe | Pt | Ps | Pe | Pt | Ps | Pe |
| 20 | 14 | 5,44 | 4,24 | 1,13 | 5,20 | 4,16 | 1,23 | 4,97 | 4,07 | 1,33 | 4,69 | 3,94 | 1,44 | 4,55 | 3,91 | 1,54 |
| 22 | 16 | 5,72 | 4,38 | 1,14 | 5,48 | 4,30 | 1,24 | 5,23 | 4,21 | 1,34 | 4,93 | 4,07 | 1,46 | 4,79 | 4,04 | 1,56 |
| 25 | 18 | 6,03 | 4,52 | 1,15 | 5,77 | 4,44 | 1,25 | 5,51 | 4,35 | 1,35 | 5,19 | 4,21 | 1,47 | 5,04 | 4,18 | 1,58 |
| 27 | 19 | 6,15 | 4,55 | 1,15 | 5,88 | 4,47 | 1,26 | 5,62 | 4,38 | 1,36 | 5,30 | 4,24 | 1,48 | 5,14 | 4,22 | 1,58 |
| 30 | 22 | 6,58 | 4,77 | 1,17 | 6,29 | 4,69 | 1,27 | 6,01 | 4,60 | 1,38 | 5,67 | 4,46 | 1,49 | 5,50 | 4,43 | 1,60 |
| 32 | 24 | 6,82 | 4,88 | 1,17 | 6,53 | 4,80 | 1,28 | 6,24 | 4,71 | 1,38 | 5,88 | 4,56 | 1,50 | 5,71 | 4,54 | 1,61 |

| EXT4M80HR + 3 indoor units size 26 | | | | | | | | | | | | | | | | |
|---|---|---|---|---|---|---|---|---|---|---|---|---|---|---|---|---|
| Indoor | | Outdoor temperature (db, °C) | | | | | | | | | | | | | | |
| | | 20 | | | 25 | | | 30 | | | 35 | | | 40 | | |
| dB, °C | wb, °C | Pt | Ps | Pe | Pt | Ps | Pe | Pt | Ps | Pe | Pt | Ps | Pe | Pt | Ps | Pe |
| 20 | 14 | 8,12 | 6,33 | 1,86 | 7,77 | 6,21 | 2,03 | 7,42 | 6,08 | 2,20 | 7,00 | 5,88 | 2,39 | 6,79 | 5,84 | 2,56 |
| 22 | 16 | 8,54 | 6,53 | 1,88 | 8,17 | 6,42 | 2,05 | 7,81 | 6,28 | 2,22 | 7,36 | 6,08 | 2,41 | 7,14 | 6,04 | 2,58 |
| 25 | 18 | 8,99 | 6,74 | 1,90 | 8,60 | 6,63 | 2,07 | 8,22 | 6,49 | 2,24 | 7,75 | 6,28 | 2,44 | 7,52 | 6,24 | 2,61 |
| 27 | 19 | 9,18 | 6,79 | 1,91 | 8,78 | 6,67 | 2,08 | 8,38 | 6,54 | 2,25 | 7,91 | 6,33 | 2,45 | 7,67 | 6,29 | 2,62 |
| 30 | 22 | 9,82 | 7,12 | 1,93 | 9,39 | 7,00 | 2,10 | 8,97 | 6,86 | 2,28 | 8,46 | 6,65 | 2,47 | 8,21 | 6,61 | 2,65 |
| 32 | 24 | 10,18 | 7,28 | 1,94 | 9,75 | 7,16 | 2,11 | 9,31 | 7,03 | 2,29 | 8,78 | 6,80 | 2,49 | 8,52 | 6,77 | 2,66 |

Pt: Total power (kW)
Ps: Sensible power (kW)
Pe: Electrical power input (kW)

# Outdoor Multisplit Units

## DC inverter multi-split from 2 to 5 indoor units

4.1 kW÷12.3 kW

MULTISPLIT

TREATMENT GOLDEN FIN | INVERTER TECHNOLOGY | ON-BOARD UNIT DIAGNOSTICS | OPERATING TEMPERATURE -15/+50°C

- **Golden Fin**: exclusive anti-corrosion coating that enables the finned heat exchanger coil to withstand salty air, rain, and other corrosive elements. In addition, it effectively prevents bacterial growth and improves thermal efficiency. The Golden Fin treatment also guarantees the maintenance of optimal performance over the long term.
- **Inverter compressor**: the inverter compressor ensures high energy efficiency even at partial loads. When individual rooms reach the desired temperature and the power demand decreases, the compressor automatically adapts, ensuring significant energy savings.
- **Flexible sizing**: even when total capacity requirements are high, it is always possible to choose the most suitable multisplit outdoor unit. Depending on the available combinations, the capacity ratio can reach a maximum value of 130%.
- Thanks to the **active power factor control**, the multisplit outdoor units are always able to maintain optimal phase synchronization. The Cosφ value always remains between 0.88 and 0.99.
- **Wide modulation range**: the advanced Inverter technology allows the compressor to modulate the operating frequency from 20 Hz up to 105 Hz, ensuring maximum operating flexibility.
- The **automatic recognition function** makes it possible to resolve any installation errors in which the refrigerant piping and electrical connections between the indoor units and the outdoor unit are not consistent. Simply press the "check switch" button and, after a few minutes, the system will automatically configure itself correctly.
- The multi-split outdoor units are able to maintain a delivered cooling capacity equal to 65% of the nominal capacity even with outdoor temperatures of -15°C. The condensing unit reduces the speed of the outdoor fan to adapt the heat exchange to the prohibitive ambient conditions, while keeping the cooling function active. This feature makes it easy to air-condition rooms in any season.
- **Guaranteed operation**: the multi-split outdoor units continue to operate correctly even when the supply voltage is unstable. Within the supply voltage range from 150 V to 260 V, operation remains stable.
- **On-board unit diagnostics**: when necessary, it is possible to access the on-board unit display to quickly identify any notification codes without needing to access the individual indoor units. Consulting the maintenance manual at the same time simplifies field verification operations.

## Example wiring diagram Outdoor Multi + 2 Indoor Units

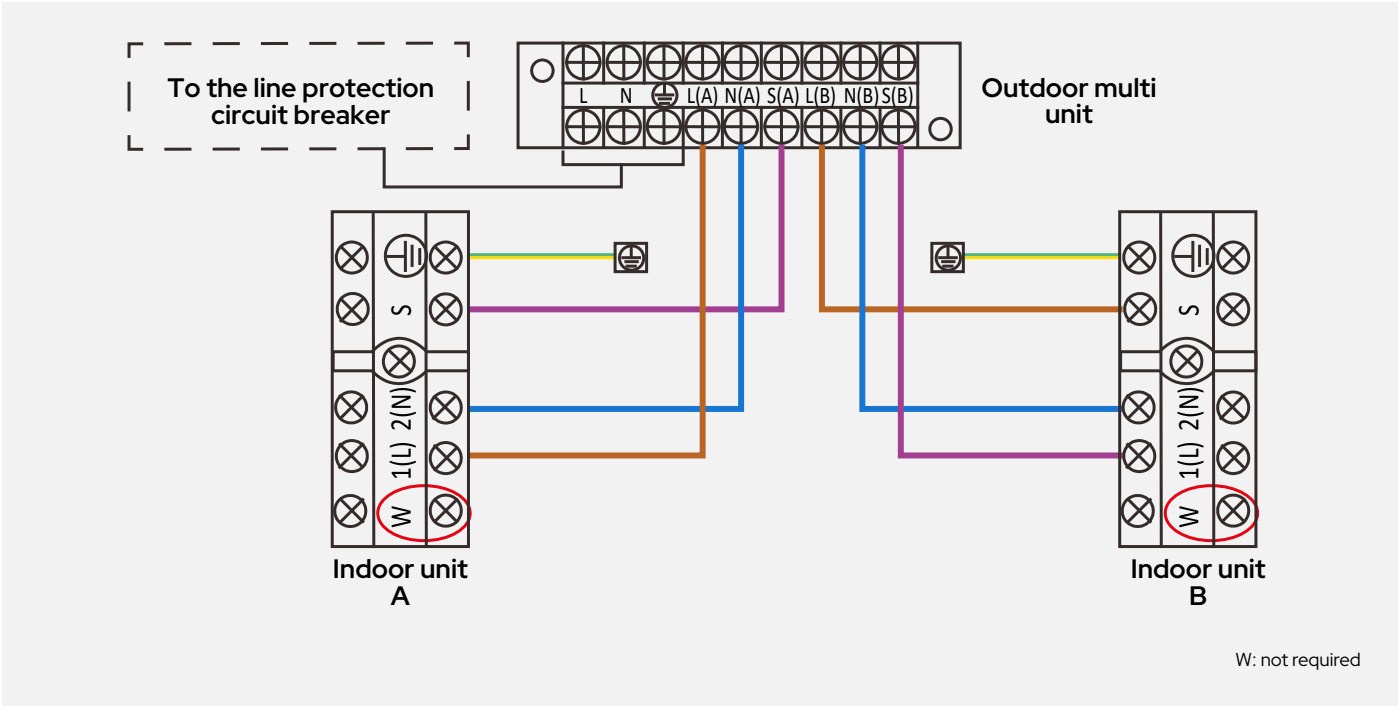

| | | | EXT 2M42R | EXT 2M53R | EXT 3M62R | EXT 3M80R1 | EXT 4M82R | EXT 4M105R | EXT 5M120R |
|---|---|---|---|---|---|---|---|---|---|
| **Connectable indoor units** | | | 2 | 2 | 3 | 3 | 4 | 4 | 5 |
| **Cooling** | Nominal cooling capacity | kW | 4,10 | 5,27 | 6,29 | 7,91 | 8,18 | 10,54 | 12,30 |
| | | BTU/h | 14.000 | 18.000 | 21.000 | 27.000 | 28.000 | 36.000 | 42.000 |
| | Minimum cooling capacity | kW | 1,50 | 2,28 | 2,0 | 3,18 | 2,34 | 3,64 | 3,01 |
| | | BTU/h | 5.100 | 7.800 | 6.800 | 10.850 | 8.000 | 12.430 | 10.300 |
| | Maximum cooling capacity | kW | 4,98 | 5,71 | 6,59 | 8,20 | 10,02 | 10,84 | 12,30 |
| | | BTU/h | 17.000 | 19.500 | 22.500 | 28.000 | 34.200 | 37.000 | 42.000 |
| | Power input | kW | 1,27 | 1,63 | 1,95 | 2,45 | 2,55 | 3,81 | 3,81 |
| | Absorbed current | A | 5,52 | 7,10 | 9,00 | 13,70 | 11,00 | 15,00 | 16,00 |
| | E.E.R. | W/W | 3,23 | 3,23 | 3,23 | 3,23 | 3,23 | 3,23 | 3,23 |
| | S.E.E.R. - Energy Class | W/W | 5.6 - A+ | 6.1 - A++ | 6.1 - A++ | 6.1 - A++ | 6.1 - A++ | 6.2 - A++ | 6.1 - A++ |
| **Heating** | Rated heating capacity | kW | 4,39 | 5,56 | 6,44 | 8,20 | 8,79 | 10,84 | 12,30 |
| | | BTU/h | 15.000 | 19.000 | 22.000 | 28.000 | 30.000 | 37.000 | 42.000 |
| | Minimum heating capacity | kW | 1,52 | 2,40 | 2,0 | 2,28 | 2,37 | 2,85 | 3,45 |
| | | BTU/h | 5.200 | 8.200 | 6.800 | 7.800 | 8.100 | 9.730 | 11.800 |
| | Maximum heating output | kW | 4,98 | 5,74 | 6,68 | 8,5 | 10,49 | 12,01 | 12,30 |
| | | BTU/h | 17.000 | 19.600 | 22.800 | 29.000 | 35.800 | 41.000 | 42.000 |
| | Power input | kW | 1,18 | 1,39 | 1,78 | 2,10 | 2,05 | 2,76 | 3,30 |
| | Absorbed current | A | 5,15 | 6,1 | 8,5 | 12,5 | 9,0 | 12,1 | 14,6 |
| | C.O.P. | W/W | 3,71 | 3,71 | 3,71 | 3,71 | 4,0 | 3,93 | 3,73 |
| | S.C.O.P. Medium range | W/W | 3.8 - A | 3.8 - A+ | 4.0 - A+ | 4.0 - A+ | 3.8 - A | 3.8 - A | 3.5 - A |
| | S.C.O.P. Warm climate zone | W/W | 4.6 - A++ | 5.1 - A+++ | 4.8 - A++ | 5.1 - A+++ | 4.6 - A++ | 5.2 - A+++ | 5.1 - A+++ |
| **Compressor** | Type | | Rotary Inverter | | | | | | |
| | Number | | 1 | | | | | | |
| | Refrigerant oil (type) | | ESTER OIL VG74 | | | | | | |
| | Refrigerant oil (quantity) | ml | 440 | 440 | 440 | 670 | 670 | 1000 | 1000 |
| **Power supply *** | Voltage, Phases, Frequency | V~, Ph, Hz | 230, 1, 50 | | | | | | |
| | Maximum absorbed power | W | 2.750 | 3.050 | 3.910 | 4.100 | 4.150 | 4.600 | 4.700 |
| | Maximum absorbed current | A | 12 | 13 | 17 | 18 | 19 | 21,5 | 22 |
| **Refrigerant** | Type | | R32 | | | | | | |
| | Refrigerant quantity | kg | 1,10 | 1,25 | 1,50 | 1,80 | 2,10 | 2,10 | 2,90 |
| | Refrigerant quantity in tons of CO2 equivalent (GWP) | Ton | 675 | | | | | | |
| | Maximum length with standard charge | m | 2x7.5 (15 m) | | 3x7.5+7.5+7.5 (22.5m) | | 4x7.5+7.5+7.5 (30m) | | 5x7.5 (37.5m) |
| | Additional load | g/m | 12 (>15 m) | | 12 (>22.5m) | | 12 (>30m) | | 12 (>37.5m) |
| | Maximum height difference between outdoor and indoor unit | m | 15 | 15 | 15 | 15 | 15 | 15 | 15 |
| | Maximum length with additional charge | m | 40 | 40 | 60 | 60 | 80 | 80 | 80 |
| | Maximum length for each unit | m | 25 | 25 | 30 | 30 | 35 | 35 | 35 |
| | Height difference between indoor units | m | 10 | 10 | 10 | 10 | 10 | 10 | 10 |
| | Minimum recommended line length | m | 3,5 | 3,5 | 3,5 | 3,5 | 3,5 | 3,5 | 3,5 |
| | Gas connections (1) | mm | Ø9,53 | | | | Ø3x9.53 + 1x12.7 | | |
| | | inch | 3/8" | | | | 3x3/8" + 1 x1/2" | | |
| | Liquid connections | mm | Ø6,53 | | | | Ø6,53 | | |
| | | inch | 1/4" | | | | 4x1/4" | | 5x1/4" |
| **Outdoor unit fans** | Type | | Axial | | | | | | |
| | Number | | 1 | | | | | | |
| | Rated power | W | 34 | 34 | 80 | 80 | 120 | 120 | 120 |
| | Nominal air flow rate | $m^3/h$ | 2100 | 2100 | 3000 | 3000 | 3800 | 4000 | 3850 |
| **Operating limits** | Outdoor temperature in cooling min/max | °C | -15 / +50 | | | | | | |
| | Outdoor temperature in heating min/max | °C | -15 / +24 | | | | | | |
| **Sound data** | Sound pressure level of outdoor unit | dB(A) | 56 | 54 | 58 | 58 | 61,5 | 61 | 64 |
| | Sound power level of outdoor unit | dB(A) | 64 | 65 | 65 | 67 | 67 | 67 | 69 |
| **Dimensional data** | Net dimensions (WxHxD) | mm | 877x554x317 | | 895x673x348 | | 1.034x810x403 | | |
| | Net weight | Kg | 31,8 | 35,5 | 46,8 | 51,1 | 62,1 | 68,8 | 74,1 |

* Data required for sizing the wiring and safety devices
Performance data referring to the use of 26-size indoor units, no height difference, pipe length 5 m.
(1) Refer to the indoor units table for the piping section.

Cooling test conditions: indoor 27°C d.b. / 19.5°C w.b. – outdoor 35°C d.b. / 24°C w.b. – Heating test conditions: indoor 20°C d.b. – outdoor 7°C d.b. / 6°C w.b.
For system power consumption, refer to the outdoor unit nameplate

## Price list

| | EXT2M42R | EXT2M53R | EXT3M62R | EXT3M80R1 | EXT4M82R | EXT4M105R | EXT5M120R |
|---|---|---|---|---|---|---|---|
| **Code** | 0101429#0542001 | 0101429#0553001 | 0101429#0562001 | 0101429#0581001 | 0101429#0582001 | 0101429#0510501 | 0101429#0512001 |
| **€** | 1.191 | 1.367 | 1.866 | 2.132 | 2.550 | 2.887 | 4.138 |

# Nevalis Multisplit

## Wall-mounted multisplit indoor unit, DC inverter, Wi-Fi

2.6 kW÷7.0 kW

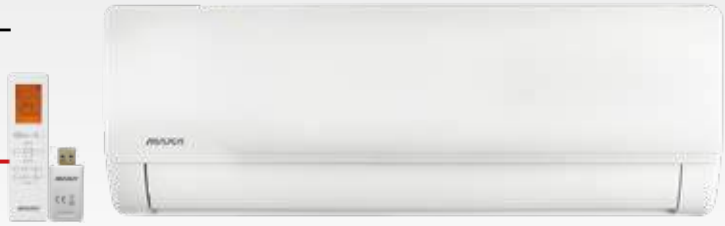

MULTISPLIT

WINTER SPECIALIST -25°C | ECO ENERGY SAVING | TREATMENT GOLDEN FIN | WI-FI Standard USB Smart Kit | APP AVAILABLE NetHome Plus | AUTO RE-START | FUNCTION TIMER | SLEEP MODE 21.5 DB(A) | LED DISPLAY | OPERATING TEMPERATURE -25/+50°C | ADJUSTABLE SPEED

## Accessories

**Infrared remote control with wall mount**
Included

**Smart Kit USB**
Included

**Airset-C Wi-Fi remote control**
Accessory sold separately

**Heated Base**
Included

| | | | NVL26R | NVL35R | NVL53R | NVL70R |
|---|---|---|---|---|---|---|
| **Cooling** | Cooling capacity | kW | 2,6 (1,0~3,5) | 3,5 (1,4~4,0) | 5,0 (2,0~6,1) | 7,0 (2,2~8,8) |
| | | BTU/h | 9.000 | 12.000 | 17.060 | 23.884 |
| **Heating** | Heating capacity | kW | 2,9 (0,8~3,7) | 3,8 (1,1~4,1) | 5,4 (1,4~6,8) | 7,3 (1,6~9,4) |
| | | BTU/h | 10.000 | 13.000 | 18.425 | 24.908 |
| **Refrigerant connections** | Gas connections (1) | mm / inch | Ø9.53(3/8") | Ø9.53(3/8") | Ø12.7(1/2") | Ø12.7(1/2") |
| | Liquid connections | mm / inch | Ø6.35(1/4") | Ø6.35(1/4") | Ø6.35(1/4") | Ø6.35(1/4") |
| **Indoor unit fans** | Type | | Centrifugal with EC motor | | | |
| | Number | | 1 | | | |
| | Nominal air flow rate | $m^3/h$ | 650 / 510 / 360 / 285 / 150 | 800 / 600 / 450 / 370 / 220 | 950 / 800 / 600 / 470 / 340 | 1.150 / 1.090 / 790 / 635 / 445 |
| **Indoor unit heat exchanger** | Internal heat exchanger type | | Copper tube and aluminum fins | | | |
| | Nominal outside diameter | mm | 5 | | | |
| | Rows | no. | 2 | 2 | 2 | 2 |
| **Electrical data** | Power supply | V~, Ph, Hz | 230, 1, 50 | | | |
| | Power input* | W | 23 | 23 | 36 | 68 |
| | Current drawn* | A | 0,45 | 0,45 | 0,48 | 0,84 |
| **Sound data** | Indoor unit sound pressure level | dB(A) | 39 / 34 / 25 / 19 | 39 / 32 / 26 / 20 | 43 / 36 / 28 / 21.5 | 46 / 39.5 / 32.5 / 21.5 |
| | Indoor unit sound power level | dB(A) | 56 | 56 | 58 | 60 |
| **Dimensional data** | Net dimensions (W x H x D) ** | mm | 723x286x199 | 813x289x201 | 975x308x218 | 1.055x330x231 |
| | Net weight | kg | 7,5 | 8 | 10,2 | 13 |

(*) Value referred to the indoor unit only
(1) Refer to the indoor units table for the piping section.
(2) Average climatic conditions / hot climatic conditions
Cooling test conditions: indoor 27°C d.b. / 19.5°C w.b. – outdoor 35°C d.b. / 24°C w.b. – Heating test conditions: indoor 20°C d.b. – outdoor 7°C d.b. / 6°C w.b.
For system power consumption, refer to the outdoor unit nameplate
** The width measurement does not include the connections.

## Price list

| | NVL26R | NVL35R | NVL53R | NVL70R |
|---|---|---|---|---|
| **Code** | 01014224#1600260 | 01014224#1600350 | 01014224#1600530 | 01014224#1600700 |
| **€** | 325 | 379 | 514 | 626 |

| ACCESSORIES SUPPLIED SEPARATELY | | Code | € |
|---|---|---|---|
| AIRSET-C | Digital remote control with Wi-Fi. SEH-NVL accessory required | 011049#0100 | 169 |
| SEH-NVL | Hardware expansion board, remote ON/OFF control, alarm signalling and wired controller connection | 0101819#180035 | 54 |

# Lys R3 Multisplit

## Indoor multisplit wall-mounted unit, DC fan, Wi-Fi

2.6 kW÷5.8 kW

MULTISPLIT

ECO ENERGY SAVING | TREATMENT GOLDEN FIN | WI-FI Standard USB Smart Kit | APP AVAILABLE NetHome Plus | AUTO RE-START | FUNCTION TIMER | SLEEP MODE 21.5 DB(A) | LED DISPLAY | OPERATING TEMPERATURE -20/+50°C | ADJUSTABLE SPEED

## Accessories

**Infrared remote control with wall mount**
Included

**Smart Kit USB**
Included

| | | | LDL26R3 | LDL35R3 | LDL53R3 | LDL70R3 |
|---|---|---|---|---|---|---|
| **Cooling** | Cooling capacity | kW | 2,64 | 3,22 | 5,27 | 5,86 |
| | | BTU/h | 9.000 | 12.000 | 18.000 | 24.000 |
| **Heating** | Heating capacity | kW | 2,49 | 3,30 | 4,97 | 6,00 |
| | | BTU/h | 8.500 | 13.000 | 19.000 | 25.000 |
| **Refrigerant connections** | Gas connections | mm / inch | Ø9.53(3/8") | Ø9.53(3/8") | Ø12.7(1/2") | Ø15,9(5/8") |
| | Liquid connections | mm / inch | Ø6.35(1/4") | Ø6.35(1/4") | Ø6.35(1/4") | Ø9.53(3/8") |
| **Indoor unit fans** | Type | | Centrifugal with EC motor | | | |
| | Number | | 1 | | | |
| | Nominal air flow rate | $m^3/h$ | 435/333/259 | 530/430/310 | 840/680/540 | 980/817/662 |
| **Indoor unit heat exchanger** | Internal heat exchanger type | | Copper tube and aluminum fins | | | |
| | Nominal outside diameter | mm | 5 | | | |
| | Rows | no. | 3 | 4 | 3 | 4 |
| **Electrical data** | Power supply | V~, Ph, Hz | 230, 1, 50 | | | |
| | Power input* | W | 20 | 20 | 34 | 62 |
| | Current drawn* | A | 0,09 | 0,09 | 0,15 | 0,28 |
| **Sound data** | Indoor unit sound pressure level | dB(A) | 37 / 32 / 25 / 21.5 | 39.5 / 35.5 / 25/ 21.5 | 42.5 / 36 / 26 | 45 / 40.5 / 36 |
| | Indoor unit sound power level | dB(A) | 50 | 54 | 56 | 59 |
| **Dimensional data** | Net dimensions (W x H x D) ** | mm | 715x285x194 | 805x285x194 | 957x302x213 | 1.040x327x220 |
| | Net weight | kg | 6,7 | 7,3 | 10 | 12,3 |

(*) Value referred to the indoor unit only
Cooling test conditions: indoor 27°C d.b. / 19.5°C w.b. – outdoor 35°C d.b. / 24°C w.b. – Heating test conditions: indoor 20°C d.b. – outdoor 7°C d.b. / 6°C w.b.
For system power consumption, refer to the outdoor unit nameplate

## Price list

| | LDL26R3 | LDL35R3 | LDL53R3 | LDL70R3 |
|---|---|---|---|---|
| **Code** | 01015224#0100260 | 01015224#0100350 | 01015224#0100530 | 01015224#0100700 |
| **€** | 259 | 300 | 488 | 605 |

# Multisplit Cassette

## DC fan cassette type indoor unit

2.6 kW÷5.3 kW

MULTISPLIT

WI-FI READY accessory
INFRARED REMOTE CONTROL included
CONDENSATE DRAIN PUMP
REMOTE ON/OFF INPUT
FRESH AIR INTAKE PROVISION
AUTOMATIC DIAGNOSIS
AUTOMATIC DEFROST
AUTOMATIC SEASON CHANGEOVER
DC INVERTER FAN MOTOR
CONDENSATION CONTROL
FRESH AIR ACTIVATION CONTACT
PRE-ARRANGED SIDE AIR SIZE 71
LOUVER POSITION MEMORY
AUTO RE-START

## Accessories

**Infrared remote control with wall mount**
Included

**Smart Wi-Fi Gateway Port**
Accessory supplied separately

**Airset-C Wi-Fi remote control**
Accessory sold separately

| | | | CCST26R1 | CCST35R1 | CCST53R1 | CCST71R |
|---|---|---|---|---|---|---|
| **Cooling** | Cooling capacity | kW | 2,64 | 3,51 | 5,27 | 7,03 |
| | | BTU/h | 9.000 | 12.000 | 18.000 | 21.000 |
| **Heating** | Heating capacity | kW | 2,93 | 3,80 | 5,57 | 7,62 |
| | | BTU/h | 10.000 | 13.000 | 17.870 | 26.000 |
| **Refrigerant connections** | Gas connections | mm / inch | Ø9,53(3/8”) | Ø9,53(3/8") | Ø12,7(1/2") | Ø15,9(5/8") |
| | Liquid connections | mm / inch | Ø6,35(1/4”) | Ø6,35(1/4") | Ø6,35(1/4") | Ø9.53(3/8") |
| **Indoor unit heat exchanger** | Number | | 1 | | | |
| | Nominal air flow rate | $m^3/h$ | 580/500/300 | 620x510x420 | 720x620x500 | 1300/1140/1000 |
| | Internal heat exchanger type | | Aluminum | | | |
| | Nominal outside diameter | mm | 7 | 7 | 7 | 7 |
| | Rows | no. | 1 | 1 | 2 | 2 |
| | Circuits | no. | 2 | 2 | 4 | 4 |
| | Heat exchanger fin | | Hydrophilic aluminum | | | |
| **Electrical data** | Power supply | V~, Ph, Hz | 230, 1, 50 | | | |
| | Power input* | W | 25 | 25 | 40 | 45 |
| | Current drawn* | A | 0,6 | 0,6 | 0,7 | 0,75 |
| **Sound data** | Indoor unit sound pressure level | dB(A) | 37/35,5,/33 | 42/38,5/31,5 | 44/41/31,5 | 50/47,5/42 |
| | Indoor unit sound power level | dB(A) | 52 | 52 | 55 | 59 |
| **Dimensional data** | Dimensions of the main unit (WxHxD) | mm | 570x570x245 | 570x570x245 | 570x570x245 | 830x830x205 |
| | Panel dimensions (WxHxD) | mm | 620x620x50 | 620x620x50 | 620x620x50 | 950x950x55 |
| | Net weight | kg | 14,5 | 16,3 | 16,3 | 21,6 |

(*) Value referred to the indoor unit only
For system power consumption, refer to the outdoor unit nameplate

Cooling test conditions: indoor 27°C d.b. / 19.5°C w.b. - outdoor 35°C d.b. / 24°C w.b.
Heating test conditions: indoor 20°C d.b. - outdoor 7°C d.b. / 6°C w.b.

## Price list

| | CCST26R1 | CCST35R1 | CCST53R1 | CCST71R |
|---|---|---|---|---|
| **Machine Code** | 0101623#040200260 | 0101623#040200350 | 0101623#040200530 | 0101619#040200710 |
| **Panel Code** | 0101425#33020 | 0101425#33020 | 0101425#33020 | 0101425#34020 |
| **€** | 895 | 917 | 1027 | 1.183 |

**ACCESSORIES SUPPLIED SEPARATELY**

| | | Code | € |
|---|---|---|---|
| SMART PORT | Gateway Wi-Fi | 0101819#120035 | 160 |
| AIRSET-C | Digital remote control with Wi-Fi for individual control | 011049#0100 | 169 |
| RFTD-01D | Fitting for conversion to Twin system | 012109#010076 | 201 |

# Ducted multisplit

## Ductable indoor unit with DC fan, Wi-Fi

2.1 kW÷5.3 kW

MULTISPLIT

STANDARD WI-FI
AIRSET-C WIRED REMOTE CONTROLLER included
CONDENSATE DRAIN PUMP
REMOTE ON/OFF INPUT
FRESH AIR ACTIVATION CONTACT
ALARM SIGNALLING CONTACT
FRESH AIR INTAKE PROVISION
AUTOMATIC DIAGNOSIS
AUTOMATIC DEFROST
AUTOMATIC SEASON CHANGEOVER
DC INVERTER FAN MOTOR
CONDENSATION CONTROL
FREE INSTALLATION sizes 53 and 71 only
AUTO RE-START
ESP SETTINGS

## Accessories

**Airset-C Wi-Fi remote control**
Included

**Infrared remote control with wall-mount support**
Accessory supplied separately

**Smart Wi-Fi Gateway Port**
Accessory supplied separately

| | | | DUCT20R2 | DUCT26R2 | DUCT35R2 | DUCT53R2 | DUCT71R2 |
|---|---|---|---|---|---|---|---|
| **Cooling** | Cooling capacity | kW | 2,05 | 2,64 | 3,51 | 5,27 | 7,03 |
| | | BTU/h | 7.000 | 9.000 | 12.000 | 18.000 | 24.000 |
| **Heating** | Heating capacity | kW | 2,34 | 2,93 | 3,81 | 6,00 | 7,62 |
| | | BTU/h | 8.000 | 10.000 | 13.000 | 20.500 | 26.000 |
| **Refrigerant connections** | Gas connections | mm / inch | Ø9.53(3/8") | Ø9.53(3/8") | Ø9.53(3/8") | Ø12.7(1/2") | Ø15,9(5/8") |
| | Liquid connections | mm / inch | Ø6.35(1/4") | Ø6.35(1/4") | Ø6.35(1/4") | Ø6.35(1/4") | Ø9.53(3/8") |
| **Indoor unit fans** | Type | | Centrifugal | | | | |
| | Number | | 1 | | | | |
| | Nominal air flow rate | $m^3/h$ | 620 / 540 / 450 | 660 / 570 / 470 | 660 / 570 / 470 | 900 / 780 / 650 | 1200 / 1000 / 700 |
| | Rated available static pressure | Pa | 25 | 25 | 25 | 25 | 25 |
| | Useful static pressure range | Pa | 0 - 80 | 0 - 80 | 0 - 100 | 0 - 160 | 0 - 160 |
| **Indoor unit heat exchanger** | Internal heat exchanger type | | Copper - Aluminum | | | | |
| | Nominal outside diameter | mm | 7 | 7 | 5 | 5 | 5 |
| | Rows | no. | 3 | | | | |
| | Circuits | no. | 3 | 3 | 5 | 6 | 9 |
| | Heat exchanger fin | | Hydrophilic aluminum | | | | |
| **Electrical data** | Power supply | V~, Ph, Hz | 230, 1, 50 | | | | |
| | Power input* | W | 88 | 88 | 91 | 172 | 217 |
| | Current drawn* | A | 0,8 | 0,8 | 0,8 | 1,3 | 1,5 |
| **Sound data** | Indoor unit sound pressure level | dB(A) | 40/34,5/27,5 | 35/33/31 | 35/33/31 | 36,5/34/31 | 33,5/32,5/31 |
| | Indoor unit sound power level | dB(A) | 57 | 54 | 52 | 53 | 56 |
| **Dimensional data** | Net dimensions (W x H x D) ** | mm | 700x200x506 | | | 700x245x 750 | 1.100x249x 774 |
| | Net weight | kg | 16,6 | 16,6 | 16,6 | 24,4 | 32,3 |

(*) Value referred to the indoor unit only
For system power consumption, refer to the outdoor unit nameplate

Cooling test conditions: indoor 27°C d.b. / 19.5°C w.b. - outdoor 35°C d.b. / 24°C w.b.
Heating test conditions: indoor 20°C d.b. - outdoor 7°C d.b. / 6°C w.b.

## Price list

| | DUCT20R2 | DUCT26R2 | DUCT35R2 | DUCT53R2 | DUCT71R2 |
|---|---|---|---|---|---|
| **Code** | 0101624#040300200 | 0101624#040300260 | 0101624#040300350 | 0101624#040300530 | 0101624#040300710 |
| **€** | 707 | 773 | 794 | 995 | 1.018 |

**ACCESSORIES SUPPLIED SEPARATELY**

| | | Code | € |
|---|---|---|---|
| Remote control | Infrared remote control | Z400-17317000A60224 | 39 |
| RFTD-01D | Fitting for conversion to Twin system | 012109#010076 | 201 |

# Multisplit Console

## DC fan console-type indoor unit

3.5 kW

MULTISPLIT

WI-FI READY accessory | INFRARED REMOTE CONTROL included | DISPLAY MACHINE EDGE | DOUBLE OUTLET AIR | AUTOMATIC DIAGNOSIS | AUTOMATIC DEFROST | CONDENSATION CONTROL | AUTO RE-START

## Accessories

**Infrared remote control with wall mount**
Included

**Smart Kit USB**
Accessory supplied separately

**Airset-C Wi-Fi remote control**
Accessory sold separately

| | | | CONS26R | CONS35R | CONS53R NEW |
|---|---|---|---|---|---|
| **Cooling** | Cooling capacity | kW | 2,64 | 3,52 | 4,98 |
| | | BTU/h | 9.000 | 12.000 | 17.000 |
| **Heating** | Heating capacity | kW | 2,93 | 3,81 | 5,27 |
| | | BTU/h | 10.000 | 13.000 | 18.000 |
| **Refrigerant connections** | Gas connections | mm / inch | Ø9,53(3/8") | Ø9,53(3/8") | Ø12,7(1/2") |
| | Liquid connections | mm / inch | Ø6,35(1/4") | Ø6,35(1/4") | Ø6,35(1/4") |
| **Indoor unit fans** | Type | | Centrifugal | | |
| | Number | | 1+1 | | |
| | Nominal air flow rate | $m^3/h$ | 600/510/400 | 650/580/490 | 780/690/600 |
| **Indoor unit heat exchanger** | Internal heat exchanger type | | Copper - Aluminum | | |
| | Nominal outside diameter | mm | 7 | | |
| | Rows | no. | 2 | | |
| | Circuits | no. | 2 | | |
| | Heat exchanger fin | | Hydrophilic aluminum | | |
| **Electrical data** | Power supply | V~, Ph, Hz | 230, 1, 50 | | |
| | Power input* | W | 25 | 30 | 35 |
| | Current drawn* | A | 0,38 | 0,40 | 0,42 |
| **Sound data** | Indoor unit sound pressure level | dB(A) | 37/34/27 | 37/34/27 | 41/38/32 |
| | Indoor unit sound power level | dB(A) | 54 | 54 | 55 |
| **Dimensional data** | Net dimensions (W x H x D) ** | mm | 794x621x200 | | |
| | Net weight | kg | 14,9 | | |

(*) Value referred to the indoor unit only
For system power consumption, refer to the outdoor unit nameplate

Cooling test conditions: indoor 27°C d.b. / 19.5°C w.b. - outdoor 35°C d.b. / 24°C w.b.
Heating test conditions: indoor 20°C d.b. - outdoor 7°C d.b. / 6°C w.b.

## Price list

| | CONS26R | CONS35R | CONS53R |
|---|---|---|---|
| **Code** | 0101619#040400260 | 0101619#040400350 | 0101619#040400530 |
| **€** | 773 | 798 | 824 |

**ACCESSORIES SUPPLIED SEPARATELY**

| | | Code | € |
|---|---|---|---|
| SMART KIT 2 | Wi-Fi dongle | 0101817#120035 | 95 |
| AIRSET-C | Digital remote control with Wi-Fi for individual control. Can only be connected by installing the SPC accessory | 011049#0100 | 169 |
| SEH-CONS | Hardware expansion board, remote ON/OFF control, alarm signalling and wired controller connection | 0101819#190035 | 54 |

# Efficiencies and combinations in Cooling

MULTISPLIT

| Indoor units | A (kW) | B (kW) | C (kW) | D (kW) | E (kW) | Capacity (kW) | | | Power input (kW) | | | EER | SEER |
|---|---|---|---|---|---|---|---|---|---|---|---|---|---|
| | | | | | | Min | Name | Max | Min | Name | Max | | |
| **EXT2M42R** | | | | | | | | | | | | | |
| 26 | 2,66 | | | | | 0,80 | 2,66 | 2,93 | 0,11 | 0,74 | 0,89 | 3,60 | 5,44 |
| 35 | 3,56 | | | | | 1,07 | 3,56 | 3,91 | 0,17 | 1,10 | 1,32 | 3,23 | 5,54 |
| 26+26 | 2,05 | 2,05 | | | | 1,23 | 4,10 | 4,51 | 0,19 | 1,27 | 1,52 | 3,23 | 5,66 |
| 26+35 | 1,76 | 2,34 | | | | 1,23 | 4,10 | 4,51 | 0,18 | 1,22 | 1,46 | 3,36 | 5,63 |
| 35+35 | 2,06 | 2,06 | | | | 1,23 | 4,11 | 4,53 | 0,18 | 1,17 | 1,40 | 3,52 | 5,53 |
| **EXT2M53R** | | | | | | | | | | | | | |
| 35 | 3,49 | | | | | 1,05 | 3,49 | 3,84 | 0,14 | 0,97 | 1,16 | 3,61 | 6,12 |
| 53 | 5,14 | | | | | 1,54 | 5,14 | 5,65 | 0,25 | 1,66 | 1,99 | 3,10 | 5,77 |
| 26+26 | 2,64 | 2,64 | | | | 1,58 | 5,28 | 5,80 | 0,24 | 1,63 | 1,96 | 3,23 | 6,10 |
| 26+35 | 2,27 | 3,02 | | | | 1,59 | 5,29 | 5,82 | 0,24 | 1,58 | 1,89 | 3,36 | 6,16 |
| 26+53 | 1,76 | 3,53 | | | | 1,59 | 5,29 | 5,82 | 0,23 | 1,53 | 1,83 | 3,46 | 6,16 |
| 35+35 | 2,64 | 2,64 | | | | 1,58 | 5,28 | 5,80 | 0,23 | 1,52 | 1,82 | 3,48 | 6,20 |
| 35+53 | 2,10 | 3,16 | | | | 1,58 | 5,26 | 5,79 | 0,22 | 1,47 | 1,77 | 3,57 | 6,14 |
| **EXT3M62R** | | | | | | | | | | | | | |
| 35 | 3,57 | | | | | 1,07 | 3,57 | 3,93 | 0,15 | 1,02 | 1,23 | 3,49 | 5,80 |
| 53 | 5,34 | | | | | 1,60 | 5,34 | 5,87 | 0,26 | 1,72 | 2,07 | 3,10 | 5,67 |
| 70 | 5,98 | | | | | 1,80 | 5,98 | 6,58 | 0,30 | 2,02 | 2,42 | 2,96 | 5,43 |
| 26+26 | 2,67 | 2,67 | | | | 1,60 | 5,34 | 5,87 | 0,24 | 1,63 | 1,95 | 3,28 | 6,05 |
| 26+35 | 2,63 | 3,51 | | | | 1,84 | 6,13 | 6,75 | 0,30 | 1,99 | 2,39 | 3,08 | 6,00 |
| 26+53 | 2,06 | 4,11 | | | | 1,85 | 6,17 | 6,79 | 0,29 | 1,94 | 2,33 | 3,17 | 5,97 |
| 35+35 | 3,07 | 3,07 | | | | 1,84 | 6,15 | 6,76 | 0,29 | 1,93 | 2,32 | 3,18 | 6,04 |
| 35+53 | 2,46 | 3,69 | | | | 1,85 | 6,15 | 6,77 | 0,28 | 1,88 | 2,26 | 3,27 | 6,03 |
| 26+26+26 | 2,05 | 2,05 | 2,05 | | | 1,84 | 6,14 | 6,76 | 0,29 | 1,91 | 2,29 | 3,23 | 6,17 |
| 26+26+35 | 1,86 | 1,86 | 2,48 | | | 1,86 | 6,20 | 6,82 | 0,28 | 1,88 | 2,25 | 3,31 | 6,13 |
| 26+35+35 | 1,68 | 2,24 | 2,24 | | | 1,84 | 6,15 | 6,76 | 0,27 | 1,78 | 2,13 | 3,46 | 6,08 |
| 35+35+35 | 2,07 | 2,07 | 2,07 | | | 1,86 | 6,20 | 6,82 | 0,26 | 1,74 | 2,09 | 3,56 | 6,03 |
| **EXT3M80R1** | | | | | | | | | | | | | |
| 53 | 5,41 | | | | | 1,62 | 5,41 | 5,95 | 0,26 | 1,72 | 2,06 | 3,14 | 5,70 |
| 70 | 7,02 | | | | | 2,11 | 7,02 | 7,73 | 0,36 | 2,37 | 2,85 | 2,96 | 5,35 |
| 26+26 | 2,69 | 2,69 | | | | 1,61 | 5,38 | 5,92 | 0,24 | 1,62 | 1,94 | 3,32 | 6,13 |
| 26+35 | 2,74 | 3,65 | | | | 1,92 | 6,38 | 7,02 | 0,29 | 1,92 | 2,31 | 3,32 | 6,19 |
| 26+53 | 2,63 | 5,26 | | | | 2,37 | 7,89 | 8,68 | 0,38 | 2,51 | 3,01 | 3,14 | 5,90 |
| 35+35 | 3,62 | 3,62 | | | | 2,17 | 7,25 | 7,97 | 0,33 | 2,20 | 2,64 | 3,29 | 6,07 |
| 35+53 | 3,15 | 4,73 | | | | 2,37 | 7,89 | 8,67 | 0,36 | 2,43 | 2,91 | 3,25 | 6,01 |
| 53+53 | 4,04 | 4,04 | | | | 2,42 | 8,08 | 8,89 | 0,37 | 2,45 | 2,94 | 3,30 | 6,07 |
| 26+26+26 | 2,64 | 2,64 | 2,64 | | | 2,37 | 7,91 | 8,70 | 0,37 | 2,45 | 2,94 | 3,23 | 6,10 |
| 26+26+35 | 2,42 | 2,42 | 3,23 | | | 2,42 | 8,06 | 8,87 | 0,37 | 2,46 | 2,95 | 3,28 | 6,19 |
| 26+26+53 | 2,03 | 2,03 | 4,05 | | | 2,43 | 8,10 | 8,91 | 0,36 | 2,43 | 2,91 | 3,34 | 6,21 |
| 26+35+35 | 2,20 | 2,94 | 2,94 | | | 2,42 | 8,08 | 8,89 | 0,36 | 2,42 | 2,90 | 3,34 | 6,25 |
| 26+35+53 | 1,87 | 2,49 | 3,74 | | | 2,43 | 8,10 | 8,91 | 0,36 | 2,39 | 2,86 | 3,39 | 6,11 |
| 35+35+35 | 2,69 | 2,69 | 2,69 | | | 2,43 | 8,08 | 8,89 | 0,36 | 2,38 | 2,85 | 3,40 | 6,32 |
| 35+35+53 | 2,31 | 2,31 | 3,47 | | | 2,43 | 8,09 | 8,90 | 0,35 | 2,34 | 2,81 | 3,45 | 6,15 |
| **EXT4M82R** | | | | | | | | | | | | | |
| 26+26 | 2,68 | 2,68 | | | | 1,61 | 5,35 | 5,89 | 0,23 | 1,56 | 1,87 | 3,44 | 6,03 |
| 26+35 | 2,65 | 3,53 | | | | 1,85 | 6,18 | 6,80 | 0,28 | 1,84 | 2,21 | 3,36 | 5,97 |
| 26+53 | 2,60 | 5,20 | | | | 2,34 | 7,80 | 8,58 | 0,39 | 2,62 | 3,15 | 2,97 | 5,70 |
| 26+70 | 2,20 | 5,87 | | | | 2,42 | 8,07 | 8,88 | 0,40 | 2,69 | 3,23 | 3,00 | 5,55 |
| 35+35 | 3,58 | 3,58 | | | | 2,15 | 7,15 | 7,87 | 0,33 | 2,22 | 2,66 | 3,22 | 5,90 |
| 35+53 | 3,22 | 4,82 | | | | 2,41 | 8,04 | 8,84 | 0,40 | 2,64 | 3,17 | 3,04 | 5,77 |
| 35+70 | 2,70 | 5,40 | | | | 2,43 | 8,11 | 8,92 | 0,39 | 2,61 | 3,14 | 3,10 | 5,57 |
| 53+53 | 4,05 | 4,05 | | | | 2,43 | 8,10 | 8,91 | 0,39 | 2,57 | 3,09 | 3,14 | 5,81 |
| 53+70 | 3,47 | 4,63 | | | | 2,43 | 8,10 | 8,91 | 0,38 | 2,54 | 3,05 | 3,19 | 5,66 |
| 26+26+26 | 2,61 | 2,61 | 2,61 | | | 2,35 | 7,82 | 8,60 | 0,38 | 2,53 | 3,03 | 3,10 | 5,99 |
| 26+26+35 | 2,43 | 2,43 | 3,24 | | | 2,43 | 8,09 | 8,90 | 0,39 | 2,59 | 3,10 | 3,13 | 6,03 |
| 26+26+53 | 2,02 | 2,02 | 4,03 | | | 2,42 | 8,07 | 8,87 | 0,38 | 2,51 | 3,01 | 3,21 | 5,99 |
| 26+26+70 | 1,74 | 1,74 | 4,65 | | | 2,44 | 8,14 | 8,95 | 0,38 | 2,52 | 3,03 | 3,23 | 5,74 |
| 26+35+35 | 2,19 | 2,92 | 2,92 | | | 2,41 | 8,04 | 8,84 | 0,37 | 2,50 | 3,00 | 3,22 | 6,06 |
| 26+35+53 | 1,89 | 2,52 | 3,78 | | | 2,46 | 8,19 | 9,01 | 0,38 | 2,52 | 3,02 | 3,25 | 5,74 |
| 26+35+70 | 1,65 | 2,20 | 4,40 | | | 2,48 | 8,25 | 9,08 | 0,38 | 2,53 | 3,04 | 3,26 | 5,78 |

*Technical data referring to pairing with Lys R3 range indoor units

| Indoor units | A (kW) | B (kW) | C (kW) | D (kW) | E (kW) | Capacity (kW) | | | Power input (kW) | | | EER | SEER |
|---|---|---|---|---|---|---|---|---|---|---|---|---|---|
| | | | | | | Min | Name | Max | Min | Name | Max | | |
| 26+53+53 | 1,66 | 3,33 | 3,33 | | | 2,50 | 8,32 | 9,15 | 0,38 | 2,54 | 3,05 | 3,28 | 6,04 |
| 35+35+35 | 2,72 | 2,72 | 2,72 | | | 2,45 | 8,17 | 8,98 | 0,38 | 2,51 | 3,01 | 3,26 | 6,09 |
| 35+35+53 | 2,37 | 2,37 | 3,56 | | | 2,49 | 8,30 | 9,13 | 0,38 | 2,53 | 3,03 | 3,28 | 6,07 |
| 35+53+53 | 2,08 | 3,12 | 3,12 | | | 2,49 | 8,31 | 9,14 | 0,37 | 2,50 | 2,99 | 3,33 | 6,04 |
| 26+26+26+26 | 2,05 | 2,05 | 2,05 | 2,05 | | 2,46 | 8,19 | 9,01 | 0,38 | 2,54 | 3,05 | 3,23 | 6,17 |
| 26+26+26+35 | 1,92 | 1,92 | 1,92 | 2,55 | | 2,49 | 8,30 | 9,13 | 0,38 | 2,55 | 3,06 | 3,26 | 6,16 |
| 26+26+26+53 | 1,66 | 1,66 | 1,66 | 3,32 | | 2,49 | 8,31 | 9,14 | 0,38 | 2,51 | 3,02 | 3,30 | 6,11 |
| 26+26+35+35 | 1,78 | 1,78 | 2,37 | 2,37 | | 2,49 | 8,29 | 9,12 | 0,38 | 2,50 | 3,01 | 3,31 | 6,13 |
| 26+26+35+53 | 1,55 | 1,55 | 2,07 | 3,11 | | 2,49 | 8,29 | 9,12 | 0,37 | 2,47 | 2,97 | 3,35 | 6,09 |
| 26+35+35+35 | 1,66 | 2,21 | 2,21 | 2,21 | | 2,48 | 8,28 | 9,11 | 0,37 | 2,46 | 2,95 | 3,36 | 6,12 |
| 35+35+35+35 | 2,07 | 2,07 | 2,07 | 2,07 | | 2,49 | 8,29 | 9,12 | 0,36 | 2,42 | 2,91 | 3,42 | 6,08 |
| **EXT4M105R** | | | | | | | | | | | | | |
| 26+26 | 2,62 | 2,62 | | | | 1,57 | 5,24 | 5,76 | 0,22 | 1,47 | 1,77 | 3,55 | 5,80 |
| 26+35 | 2,62 | 3,49 | | | | 1,83 | 6,11 | 6,72 | 0,26 | 1,73 | 2,07 | 3,54 | 6,04 |
| 26+53 | 2,63 | 5,27 | | | | 2,37 | 7,90 | 8,69 | 0,36 | 2,38 | 2,86 | 3,32 | 5,95 |
| 26+70 | 2,63 | 7,03 | | | | 2,90 | 9,66 | 10,63 | 0,48 | 3,19 | 3,83 | 3,03 | 5,67 |
| 35+35 | 3,56 | 3,56 | | | | 2,13 | 7,11 | 7,83 | 0,31 | 2,05 | 2,45 | 3,48 | 6,15 |
| 35+53 | 3,54 | 5,31 | | | | 2,66 | 8,85 | 9,74 | 0,41 | 2,72 | 3,27 | 3,25 | 5,94 |
| 35+70 | 3,46 | 6,92 | | | | 3,11 | 10,37 | 11,41 | 0,52 | 3,46 | 4,15 | 3,00 | 5,74 |
| 53+53 | 5,18 | 5,18 | | | | 3,11 | 10,36 | 11,40 | 0,51 | 3,41 | 4,09 | 3,04 | 5,85 |
| 53+70 | 4,43 | 5,91 | | | | 3,10 | 10,35 | 11,38 | 0,49 | 3,30 | 3,96 | 3,14 | 5,80 |
| 26+26+26 | 2,64 | 2,64 | 2,64 | | | 2,37 | 7,91 | 8,70 | 0,34 | 2,30 | 2,76 | 3,44 | 6,22 |
| 26+26+35 | 2,66 | 2,66 | 3,55 | | | 2,66 | 8,87 | 9,76 | 0,40 | 2,64 | 3,17 | 3,36 | 6,17 |
| 26+26+53 | 2,58 | 2,58 | 5,16 | | | 3,10 | 10,32 | 11,35 | 0,49 | 3,26 | 3,91 | 3,17 | 6,06 |
| 26+26+70 | 2,25 | 2,25 | 5,99 | | | 3,14 | 10,48 | 11,53 | 0,49 | 3,27 | 3,93 | 3,20 | 5,95 |
| 26+35+35 | 2,64 | 3,52 | 3,52 | | | 2,90 | 9,68 | 10,65 | 0,44 | 2,95 | 3,54 | 3,28 | 6,15 |
| 26+35+53 | 2,43 | 3,24 | 4,85 | | | 3,15 | 10,52 | 11,57 | 0,49 | 3,27 | 3,93 | 3,21 | 6,12 |
| 26+35+70 | 2,13 | 2,84 | 5,68 | | | 3,19 | 10,64 | 11,71 | 0,49 | 3,29 | 3,95 | 3,24 | 6,01 |
| 26+53+53 | 2,14 | 4,29 | 4,29 | | | 3,22 | 10,72 | 11,79 | 0,49 | 3,30 | 3,96 | 3,25 | 6,16 |
| 35+35+35 | 3,49 | 3,49 | 3,49 | | | 3,14 | 10,48 | 11,53 | 0,49 | 3,26 | 3,91 | 3,22 | 6,15 |
| 35+35+53 | 3,05 | 3,05 | 4,58 | | | 3,21 | 10,68 | 11,75 | 0,49 | 3,28 | 3,94 | 3,25 | 6,19 |
| 35+35+70 | 2,66 | 2,66 | 5,33 | | | 3,20 | 10,66 | 11,72 | 0,49 | 3,24 | 3,88 | 3,29 | 6,05 |
| 35+53+53 | 2,68 | 4,02 | 4,02 | | | 3,22 | 10,73 | 11,81 | 0,49 | 3,24 | 3,89 | 3,31 | 6,23 |
| 26+26+26+26 | 2,64 | 2,64 | 2,64 | 2,64 | | 3,17 | 10,55 | 11,61 | 0,49 | 3,30 | 3,96 | 3,20 | 6,20 |
| 26+26+26+35 | 2,47 | 2,47 | 2,47 | 3,29 | | 3,21 | 10,71 | 11,78 | 0,50 | 3,31 | 3,97 | 3,24 | 6,27 |
| 26+26+26+53 | 2,12 | 2,12 | 2,12 | 4,24 | | 3,18 | 10,61 | 11,67 | 0,48 | 3,20 | 3,84 | 3,31 | 6,29 |
| 26+26+35+35 | 2,30 | 2,30 | 3,06 | 3,06 | | 3,22 | 10,72 | 11,79 | 0,49 | 3,25 | 3,90 | 3,29 | 6,32 |
| 26+26+35+53 | 2,01 | 2,01 | 2,68 | 4,02 | | 3,22 | 10,73 | 11,80 | 0,48 | 3,21 | 3,85 | 3,34 | 6,33 |
| 26+35+35+35 | 2,14 | 2,86 | 2,86 | 2,86 | | 3,21 | 10,71 | 11,78 | 0,48 | 3,20 | 3,84 | 3,35 | 6,39 |
| 35+35+35+35 | 2,67 | 2,67 | 2,67 | 2,67 | | 3,21 | 10,69 | 11,76 | 0,47 | 3,14 | 3,77 | 3,40 | 6,41 |
| 35+35+35+53 | 2,37 | 2,37 | 2,37 | 3,56 | | 3,20 | 10,67 | 11,74 | 0,46 | 3,10 | 3,72 | 3,45 | 6,41 |
| **EXT5M120R** | | | | | | | | | | | | | |
| 26+35 | 2,69 | 3,59 | | | | 1,88 | 6,28 | 6,90 | 0,26 | 1,73 | 2,07 | 3,64 | 5,72 |
| 26+53 | 2,71 | 5,41 | | | | 2,43 | 8,12 | 8,93 | 0,35 | 2,34 | 2,80 | 3,47 | 5,67 |
| 26+70 | 2,70 | 7,21 | | | | 2,97 | 9,91 | 10,90 | 0,47 | 3,12 | 3,74 | 3,18 | 5,38 |
| 35+35 | 3,62 | 3,62 | | | | 2,17 | 7,24 | 7,96 | 0,30 | 1,99 | 2,39 | 3,63 | 5,80 |
| 35+53 | 3,61 | 5,41 | | | | 2,71 | 9,02 | 9,92 | 0,40 | 2,64 | 3,16 | 3,42 | 5,68 |
| 35+70 | 3,59 | 7,18 | | | | 3,23 | 10,76 | 11,84 | 0,52 | 3,46 | 4,15 | 3,11 | 5,35 |
| 53+53 | 5,38 | 5,38 | | | | 3,23 | 10,75 | 11,83 | 0,51 | 3,40 | 4,09 | 3,16 | 5,48 |
| 53+70 | 5,25 | 7,00 | | | | 3,68 | 12,26 | 13,48 | 0,63 | 4,23 | 5,07 | 2,90 | 5,28 |
| 26+26+26 | 2,70 | 2,70 | 2,70 | | | 2,43 | 8,09 | 8,90 | 0,34 | 2,25 | 2,70 | 3,59 | 5,95 |
| 26+26+35 | 2,70 | 2,70 | 3,60 | | | 2,70 | 9,00 | 9,90 | 0,38 | 2,55 | 3,06 | 3,53 | 5,93 |
| 26+26+53 | 2,71 | 2,71 | 5,41 | | | 3,25 | 10,83 | 11,91 | 0,50 | 3,33 | 3,99 | 3,25 | 5,73 |
| 26+26+70 | 2,62 | 2,62 | 7,00 | | | 3,67 | 12,25 | 13,47 | 0,61 | 4,07 | 4,88 | 3,01 | 5,47 |
| 26+35+35 | 2,70 | 3,59 | 3,59 | | | 2,97 | 9,88 | 10,87 | 0,43 | 2,87 | 3,44 | 3,45 | 5,88 |
| 26+35+53 | 2,70 | 3,59 | 5,39 | | | 3,50 | 11,68 | 12,85 | 0,55 | 3,70 | 4,43 | 3,16 | 5,70 |
| 26+35+70 | 2,45 | 3,26 | 6,52 | | | 3,67 | 12,23 | 13,46 | 0,59 | 3,94 | 4,73 | 3,10 | 5,51 |
| 26+53+53 | 2,44 | 4,88 | 4,88 | | | 3,66 | 12,19 | 13,41 | 0,58 | 3,88 | 4,65 | 3,14 | 5,72 |
| 26+53+70 | 2,15 | 4,30 | 5,74 | | | 3,66 | 12,19 | 13,41 | 0,57 | 3,82 | 4,59 | 3,19 | 5,56 |
| 35+35+35 | 3,58 | 3,58 | 3,58 | | | 3,22 | 10,74 | 11,81 | 0,48 | 3,20 | 3,84 | 3,35 | 5,80 |
| 35+35+53 | 3,51 | 3,51 | 5,26 | | | 3,68 | 12,28 | 13,51 | 0,59 | 3,94 | 4,73 | 3,12 | 5,73 |
| 35+35+70 | 3,07 | 3,07 | 6,14 | | | 3,69 | 12,29 | 13,52 | 0,58 | 3,88 | 4,66 | 3,16 | 5,57 |
| 35+53+53 | 3,06 | 4,59 | 4,59 | | | 3,67 | 12,24 | 13,46 | 0,57 | 3,82 | 4,58 | 3,20 | 5,73 |

*Technical data referring to pairing with Lys R3 range indoor units

| Indoor units | A (kW) | B (kW) | C (kW) | D (kW) | E (kW) | Capacity (kW) | | | Power input (kW) | | | EER | SEER |
|---|---|---|---|---|---|---|---|---|---|---|---|---|---|
| | | | | | | Min | Name | Max | Min | Name | Max | | |
| 35+53+70 | 2,71 | 4,07 | 5,42 | | | 3,66 | 12,20 | 13,42 | 0,56 | 3,76 | 4,51 | 3,24 | 5,62 |
| 26+26+26+26 | 2,70 | 2,70 | 2,70 | 2,70 | | 3,24 | 10,81 | 11,89 | 0,49 | 3,24 | 3,89 | 3,34 | 5,90 |
| 26+26+26+35 | 2,69 | 2,69 | 2,69 | 3,58 | | 3,49 | 11,65 | 12,81 | 0,54 | 3,59 | 4,31 | 3,24 | 5,81 |
| 26+26+26+53 | 2,45 | 2,45 | 2,45 | 4,91 | | 3,68 | 12,26 | 13,49 | 0,58 | 3,85 | 4,62 | 3,19 | 5,89 |
| 26+26+26+70 | 2,16 | 2,16 | 2,16 | 5,75 | | 3,67 | 12,22 | 13,44 | 0,57 | 3,79 | 4,54 | 3,23 | 5,70 |
| 26+26+35+35 | 2,62 | 2,62 | 3,49 | 3,49 | | 3,67 | 12,23 | 13,45 | 0,57 | 3,83 | 4,60 | 3,19 | 5,71 |
| 26+26+35+53 | 2,30 | 2,30 | 3,07 | 4,60 | | 3,68 | 12,27 | 13,49 | 0,57 | 3,78 | 4,54 | 3,24 | 5,91 |
| 26+26+35+70 | 2,06 | 2,06 | 2,75 | 5,49 | | 3,71 | 12,35 | 13,59 | 0,57 | 3,80 | 4,56 | 3,25 | 5,72 |
| 26+35+35+35 | 2,45 | 3,26 | 3,26 | 3,26 | | 3,67 | 12,24 | 13,46 | 0,57 | 3,77 | 4,52 | 3,25 | 5,69 |
| 26+35+35+53 | 2,19 | 2,92 | 2,92 | 4,38 | | 3,72 | 12,40 | 13,64 | 0,57 | 3,80 | 4,56 | 3,27 | 5,93 |
| 26+35+35+70 | 1,97 | 2,63 | 2,63 | 5,25 | | 3,74 | 12,48 | 13,73 | 0,57 | 3,81 | 4,57 | 3,27 | 5,87 |
| 35+35+35+35 | 3,09 | 3,09 | 3,09 | 3,09 | | 3,71 | 12,38 | 13,62 | 0,57 | 3,78 | 4,54 | 3,27 | 5,96 |
| 35+35+35+53 | 2,78 | 2,78 | 2,78 | 4,18 | | 3,76 | 12,53 | 13,79 | 0,57 | 3,81 | 4,57 | 3,29 | 5,94 |
| 35+35+35+70 | 2,52 | 2,52 | 2,52 | 5,04 | | 3,78 | 12,60 | 13,86 | 0,57 | 3,82 | 4,59 | 3,30 | 5,73 |
| 26+26+26+26+26 | 2,46 | 2,46 | 2,46 | 2,46 | 2,46 | 3,69 | 12,31 | 13,54 | 0,57 | 3,81 | 4,57 | 3,23 | 6,10 |
| 26+26+26+26+35 | 2,33 | 2,33 | 2,33 | 2,33 | 3,11 | 3,73 | 12,43 | 13,68 | 0,57 | 3,82 | 4,59 | 3,25 | 6,08 |
| 26+26+26+26+53 | 2,10 | 2,10 | 2,10 | 2,10 | 4,19 | 3,78 | 12,58 | 13,84 | 0,58 | 3,85 | 4,62 | 3,27 | 6,04 |
| 26+26+26+26+70 | 1,88 | 1,88 | 1,88 | 1,88 | 5,01 | 3,75 | 12,52 | 13,77 | 0,57 | 3,78 | 4,54 | 3,31 | 5,79 |
| 26+26+26+35+35 | 2,21 | 2,21 | 2,21 | 2,95 | 2,95 | 3,76 | 12,55 | 13,80 | 0,57 | 3,83 | 4,60 | 3,27 | 6,06 |
| 26+26+26+35+53 | 1,98 | 1,98 | 1,98 | 2,64 | 3,96 | 3,76 | 12,54 | 13,79 | 0,57 | 3,78 | 4,53 | 3,32 | 6,02 |
| 26+26+26+35+70 | 1,80 | 1,80 | 1,80 | 2,40 | 4,81 | 3,79 | 12,62 | 13,88 | 0,57 | 3,79 | 4,55 | 3,33 | 5,78 |
| 26+26+35+35+35 | 2,11 | 2,11 | 2,81 | 2,81 | 2,81 | 3,80 | 12,66 | 13,93 | 0,58 | 3,84 | 4,61 | 3,29 | 6,04 |
| 26+26+35+35+53 | 1,90 | 1,90 | 2,53 | 2,53 | 3,79 | 3,79 | 12,64 | 13,91 | 0,57 | 3,79 | 4,55 | 3,34 | 5,99 |
| 26+26+35+35+70 | 1,71 | 1,71 | 2,28 | 2,28 | 4,57 | 3,77 | 12,56 | 13,82 | 0,56 | 3,72 | 4,47 | 3,37 | 5,77 |
| 26+35+35+35+35 | 1,99 | 2,66 | 2,66 | 2,66 | 2,66 | 3,78 | 12,61 | 13,88 | 0,57 | 3,77 | 4,53 | 3,34 | 6,01 |
| 26+35+35+35+53 | 1,80 | 2,40 | 2,40 | 2,40 | 3,60 | 3,78 | 12,59 | 13,85 | 0,56 | 3,72 | 4,46 | 3,39 | 5,99 |
| 35+35+35+35+35 | 2,51 | 2,51 | 2,51 | 2,51 | 2,51 | 3,77 | 12,56 | 13,82 | 0,56 | 3,71 | 4,45 | 3,39 | 5,99 |
| 35+35+35+35+53 | 2,28 | 2,28 | 2,28 | 2,28 | 3,42 | 3,76 | 12,54 | 13,79 | 0,55 | 3,65 | 4,38 | 3,44 | 5,95 |

## Efficiencies and combinations in Heating

MULTISPLIT

| Indoor units | A (kW) | B (kW) | C (kW) | D (kW) | E (kW) | Capacity (kW) | | | Power input (kW) | | | COP | SCOP |
|---|---|---|---|---|---|---|---|---|---|---|---|---|---|
| | | | | | | Min | Name | Max | Min | Name | Max | | |
| **EXT2M42R** | | | | | | | | | | | | | |
| 26 | 2,63 | | | | | 0,79 | 2,63 | 2,89 | 0,10 | 0,68 | 0,81 | 3,89 | 3,71 |
| 35 | 3,51 | | | | | 1,05 | 3,51 | 3,86 | 0,14 | 0,91 | 1,10 | 3,85 | 3,87 |
| 26+26 | 2,20 | 2,20 | | | | 1,32 | 4,40 | 4,84 | 0,17 | 1,11 | 1,33 | 3,97 | 3,83 |
| 26+35 | 1,87 | 2,49 | | | | 1,31 | 4,37 | 4,80 | 0,16 | 1,04 | 1,25 | 4,19 | 3,90 |
| 35+35 | 2,20 | 2,20 | | | | 1,32 | 4,39 | 4,83 | 0,15 | 1,02 | 1,22 | 4,32 | 4,00 |
| **EXT2M53R** | | | | | | | | | | | | | |
| 35 | 3,53 | | | | | 1,06 | 3,53 | 3,88 | 0,13 | 0,86 | 1,04 | 4,08 | 3,82 |
| 53 | 5,57 | | | | | 1,67 | 5,57 | 6,12 | 0,25 | 1,66 | 1,99 | 3,35 | 3,78 |
| 26+26 | 2,78 | 2,78 | | | | 1,67 | 5,57 | 6,13 | 0,23 | 1,50 | 1,80 | 3,71 | 3,80 |
| 26+35 | 2,39 | 3,19 | | | | 1,68 | 5,58 | 6,14 | 0,21 | 1,43 | 1,72 | 3,90 | 3,89 |
| 26+53 | 1,86 | 3,71 | | | | 1,67 | 5,57 | 6,13 | 0,20 | 1,34 | 1,60 | 4,17 | 3,76 |
| 35+35 | 2,78 | 2,78 | | | | 1,67 | 5,56 | 6,11 | 0,20 | 1,34 | 1,61 | 4,14 | 3,93 |
| 35+53 | 2,24 | 3,35 | | | | 1,68 | 5,59 | 6,15 | 0,20 | 1,30 | 1,56 | 4,29 | 3,78 |
| **EXT3M62R** | | | | | | | | | | | | | |
| 35 | 3,49 | | | | | 1,05 | 3,49 | 3,84 | 0,14 | 0,91 | 1,09 | 3,83 | 3,87 |
| 53 | 5,23 | | | | | 1,57 | 5,23 | 5,75 | 0,24 | 1,57 | 1,89 | 3,33 | 3,75 |
| 70 | 6,42 | | | | | 1,92 | 6,42 | 7,06 | 0,30 | 2,02 | 2,42 | 3,18 | 3,81 |
| 26+26 | 2,62 | 2,62 | | | | 1,57 | 5,24 | 5,77 | 0,21 | 1,42 | 1,71 | 3,69 | 3,95 |
| 26+35 | 2,75 | 3,67 | | | | 1,92 | 6,42 | 7,06 | 0,28 | 1,84 | 2,21 | 3,48 | 4,04 |
| 26+53 | 2,14 | 4,28 | | | | 1,93 | 6,42 | 7,06 | 0,26 | 1,71 | 2,05 | 3,75 | 3,96 |
| 35+35 | 3,20 | 3,20 | | | | 1,92 | 6,40 | 7,04 | 0,26 | 1,73 | 2,08 | 3,69 | 4,13 |
| 35+53 | 2,58 | 3,86 | | | | 1,93 | 6,44 | 7,09 | 0,25 | 1,67 | 2,00 | 3,87 | 4,02 |
| 26+26+26 | 2,14 | 2,14 | 2,14 | | | 1,93 | 6,43 | 7,07 | 0,25 | 1,65 | 1,98 | 3,89 | 4,04 |
| 26+26+35 | 1,93 | 1,93 | 2,58 | | | 1,93 | 6,45 | 7,09 | 0,24 | 1,62 | 1,94 | 3,98 | 4,08 |
| 26+35+35 | 1,75 | 2,34 | 2,34 | | | 1,93 | 6,43 | 7,07 | 0,24 | 1,57 | 1,89 | 4,08 | 4,14 |
| 35+35+35 | 2,15 | 2,15 | 2,15 | | | 1,93 | 6,44 | 7,08 | 0,23 | 1,55 | 1,86 | 4,15 | 4,16 |

*Technical data referring to pairing with Lys R3 range indoor units

| Indoor units | A (kW) | B (kW) | C (kW) | D (kW) | E (kW) | Capacity (kW) | | | Power input (kW) | | | SEER | EER |
|---|---|---|---|---|---|---|---|---|---|---|---|---|---|
| | | | | | | Min | Name | Max | Min | Name | Max | | |
| **EXT3M80R1** | | | | | | | | | | | | | |
| 53 | 5,27 | | | | | 1,58 | 5,27 | 5,80 | 0,25 | 1,64 | 1,97 | 3,21 | 3,64 |
| 70 | 7,06 | | | | | 2,12 | 7,06 | 7,77 | 0,37 | 2,48 | 2,97 | 2,85 | 3,65 |
| 26+26 | 2,64 | 2,64 | | | | 1,58 | 5,28 | 5,81 | 0,22 | 1,48 | 1,77 | 3,58 | 3,77 |
| 26+35 | 2,66 | 3,55 | | | | 1,86 | 6,21 | 6,83 | 0,26 | 1,76 | 2,12 | 3,52 | 3,92 |
| 26+53 | 2,66 | 5,32 | | | | 2,39 | 7,97 | 8,77 | 0,36 | 2,43 | 2,91 | 3,28 | 3,79 |
| 35+35 | 3,52 | 3,52 | | | | 2,11 | 7,04 | 7,74 | 0,30 | 2,01 | 2,41 | 3,50 | 3,97 |
| 35+53 | 3,21 | 4,82 | | | | 2,41 | 8,03 | 8,83 | 0,35 | 2,33 | 2,80 | 3,44 | 3,86 |
| 53+53 | 4,00 | 4,00 | | | | 2,40 | 7,99 | 8,79 | 0,34 | 2,26 | 2,71 | 3,54 | 3,76 |
| 26+26+26 | 2,74 | 2,74 | 2,74 | | | 2,46 | 8,21 | 9,03 | 0,33 | 2,21 | 2,65 | 3,71 | 4,00 |
| 26+26+35 | 2,48 | 2,48 | 3,31 | | | 2,48 | 8,28 | 9,11 | 0,32 | 2,12 | 2,55 | 3,90 | 4,05 |
| 26+26+53 | 2,06 | 2,06 | 4,11 | | | 2,47 | 8,22 | 9,04 | 0,31 | 2,04 | 2,45 | 4,02 | 3,93 |
| 26+35+35 | 2,25 | 2,99 | 2,99 | | | 2,47 | 8,24 | 9,06 | 0,31 | 2,05 | 2,46 | 4,02 | 4,12 |
| 26+35+53 | 1,91 | 2,55 | 3,83 | | | 2,49 | 8,29 | 9,12 | 0,30 | 2,02 | 2,42 | 4,11 | 4,00 |
| 35+35+35 | 2,76 | 2,76 | 2,76 | | | 2,48 | 8,28 | 9,10 | 0,30 | 1,99 | 2,39 | 4,15 | 4,15 |
| 35+35+53 | 2,34 | 2,34 | 3,52 | | | 2,46 | 8,20 | 9,02 | 0,29 | 1,94 | 2,33 | 4,23 | 4,02 |
| **EXT4M82R** | | | | | | | | | | | | | |
| 26+26 | 2,68 | 2,68 | | | | 1,61 | 5,36 | 5,90 | 0,21 | 1,42 | 1,70 | 3,78 | 3,47 |
| 26+35 | 2,69 | 3,59 | | | | 1,88 | 6,28 | 6,91 | 0,25 | 1,68 | 2,02 | 3,74 | 3,60 |
| 26+53 | 2,62 | 5,23 | | | | 2,35 | 7,85 | 8,63 | 0,33 | 2,21 | 2,66 | 3,55 | 3,58 |
| 26+70 | 2,40 | 6,39 | | | | 2,64 | 8,79 | 9,67 | 0,38 | 2,54 | 3,05 | 3,46 | 3,59 |
| 35+35 | 3,59 | 3,59 | | | | 2,15 | 7,17 | 7,89 | 0,29 | 1,92 | 2,30 | 3,74 | 3,69 |
| 35+53 | 3,48 | 5,23 | | | | 2,61 | 8,71 | 9,58 | 0,37 | 2,47 | 2,96 | 3,53 | 3,64 |
| 35+70 | 2,91 | 5,83 | | | | 2,62 | 8,74 | 9,61 | 0,36 | 2,38 | 2,85 | 3,68 | 3,68 |
| 53+53 | 4,38 | 4,38 | | | | 2,63 | 8,76 | 9,64 | 0,37 | 2,45 | 2,94 | 3,58 | 3,58 |
| 53+70 | 3,74 | 4,99 | | | | 2,62 | 8,73 | 9,60 | 0,34 | 2,30 | 2,76 | 3,80 | 3,61 |
| 26+26+26 | 2,70 | 2,70 | 2,70 | | | 2,43 | 8,10 | 8,92 | 0,31 | 2,04 | 2,45 | 3,97 | 3,78 |
| 26+26+35 | 2,63 | 2,63 | 3,51 | | | 2,63 | 8,77 | 9,64 | 0,33 | 2,19 | 2,63 | 4,00 | 3,88 |
| 26+26+53 | 2,18 | 2,18 | 4,37 | | | 2,62 | 8,73 | 9,61 | 0,32 | 2,12 | 2,54 | 4,12 | 3,80 |
| 26+26+70 | 1,89 | 1,89 | 5,04 | | | 2,65 | 8,82 | 9,70 | 0,31 | 2,09 | 2,51 | 4,22 | 3,83 |
| 26+35+35 | 2,39 | 3,18 | 3,18 | | | 2,63 | 8,75 | 9,63 | 0,32 | 2,11 | 2,53 | 4,15 | 3,95 |
| 26+35+53 | 2,01 | 2,68 | 4,02 | | | 2,61 | 8,71 | 9,58 | 0,31 | 2,04 | 2,45 | 4,26 | 3,87 |
| 26+35+70 | 1,75 | 2,34 | 4,68 | | | 2,63 | 8,77 | 9,65 | 0,30 | 2,03 | 2,43 | 4,32 | 3,88 |
| 26+53+53 | 1,74 | 3,49 | 3,49 | | | 2,62 | 8,72 | 9,60 | 0,29 | 1,94 | 2,33 | 4,49 | 3,82 |
| 35+35+35 | 2,91 | 2,91 | 2,91 | | | 2,62 | 8,72 | 9,59 | 0,30 | 2,03 | 2,43 | 4,30 | 4,00 |
| 35+35+53 | 2,51 | 2,51 | 3,77 | | | 2,64 | 8,79 | 9,67 | 0,30 | 2,00 | 2,40 | 4,39 | 3,92 |
| 35+53+53 | 2,19 | 3,29 | 3,29 | | | 2,63 | 8,76 | 9,64 | 0,29 | 1,92 | 2,30 | 4,57 | 3,87 |
| 26+26+26+26 | 2,18 | 2,18 | 2,18 | 2,18 | | 2,62 | 8,72 | 9,59 | 0,31 | 2,04 | 2,44 | 4,28 | 3,82 |
| 26+26+26+35 | 2,02 | 2,02 | 2,02 | 2,70 | | 2,63 | 8,77 | 9,64 | 0,30 | 2,01 | 2,41 | 4,37 | 3,86 |
| 26+26+26+53 | 1,74 | 1,74 | 1,74 | 3,49 | | 2,62 | 8,72 | 9,59 | 0,29 | 1,95 | 2,34 | 4,48 | 3,78 |
| 26+26+35+35 | 1,89 | 1,89 | 2,52 | 2,52 | | 2,64 | 8,81 | 9,69 | 0,30 | 1,98 | 2,38 | 4,44 | 3,91 |
| 26+26+35+53 | 1,64 | 1,64 | 2,19 | 3,28 | | 2,63 | 8,76 | 9,63 | 0,29 | 1,93 | 2,31 | 4,55 | 3,82 |
| 26+35+35+35 | 1,75 | 2,33 | 2,33 | 2,33 | | 2,62 | 8,73 | 9,60 | 0,29 | 1,94 | 2,33 | 4,51 | 3,92 |
| 35+35+35+35 | 2,19 | 2,19 | 2,19 | 2,19 | | 2,63 | 8,76 | 9,64 | 0,29 | 1,92 | 2,30 | 4,57 | 3,96 |
| **EXT4M105R** | | | | | | | | | | | | | |
| 26+26 | 2,60 | 2,60 | | | | 1,56 | 5,20 | 5,72 | 0,21 | 1,42 | 1,70 | 3,67 | 3,35 |
| 26+35 | 2,63 | 3,50 | | | | 1,84 | 6,13 | 6,74 | 0,24 | 1,62 | 1,94 | 3,79 | 3,50 |
| 26+53 | 2,61 | 5,22 | | | | 2,35 | 7,83 | 8,61 | 0,31 | 2,04 | 2,44 | 3,84 | 3,54 |
| 26+70 | 2,61 | 6,95 | | | | 2,87 | 9,55 | 10,51 | 0,39 | 2,57 | 3,08 | 3,72 | 3,64 |
| 35+35 | 3,51 | 3,51 | | | | 2,11 | 7,02 | 7,73 | 0,27 | 1,80 | 2,16 | 3,91 | 3,63 |
| 35+53 | 3,48 | 5,22 | | | | 2,61 | 8,70 | 9,57 | 0,33 | 2,20 | 2,64 | 3,95 | 3,68 |
| 35+70 | 3,56 | 7,12 | | | | 3,21 | 10,68 | 11,75 | 0,43 | 2,85 | 3,42 | 3,75 | 3,71 |
| 53+53 | 5,31 | 5,31 | | | | 3,18 | 10,61 | 11,68 | 0,43 | 2,88 | 3,46 | 3,69 | 3,64 |
| 53+70 | 4,60 | 6,13 | | | | 3,22 | 10,73 | 11,81 | 0,42 | 2,83 | 3,40 | 3,79 | 3,69 |
| 26+26+26 | 2,59 | 2,59 | 2,59 | | | 2,33 | 7,78 | 8,56 | 0,29 | 1,93 | 2,31 | 4,04 | 3,64 |
| 26+26+35 | 2,64 | 2,64 | 3,52 | | | 2,64 | 8,81 | 9,69 | 0,32 | 2,15 | 2,58 | 4,09 | 3,78 |
| 26+26+53 | 2,71 | 2,71 | 5,42 | | | 3,25 | 10,83 | 11,91 | 0,42 | 2,78 | 3,33 | 3,90 | 3,74 |
| 26+26+70 | 2,31 | 2,31 | 6,15 | | | 3,23 | 10,77 | 11,85 | 0,40 | 2,68 | 3,22 | 4,02 | 3,78 |
| 26+35+35 | 2,64 | 3,52 | 3,52 | | | 2,90 | 9,67 | 10,64 | 0,35 | 2,35 | 2,82 | 4,11 | 3,83 |
| 26+35+53 | 2,49 | 3,32 | 4,98 | | | 3,24 | 10,80 | 11,87 | 0,40 | 2,66 | 3,20 | 4,05 | 3,79 |
| 26+35+70 | 2,14 | 2,86 | 5,71 | | | 3,21 | 10,71 | 11,79 | 0,39 | 2,58 | 3,10 | 4,15 | 3,80 |
| 26+53+53 | 2,15 | 4,29 | 4,29 | | | 3,22 | 10,74 | 11,81 | 0,38 | 2,53 | 3,04 | 4,24 | 3,77 |
| 35+35+35 | 3,60 | 3,60 | 3,60 | | | 3,24 | 10,81 | 11,89 | 0,39 | 2,63 | 3,15 | 4,11 | 3,89 |

*Technical data referring to pairing with Lys R3 range indoor units

| Indoor units | A (kW) | B (kW) | C (kW) | D (kW) | E (kW) | Capacity (kW) | | | Power input (kW) | | | COP | SCOP |
|---|---|---|---|---|---|---|---|---|---|---|---|---|---|
| | | | | | | Min | Name | Max | Min | Name | Max | | |
| 35+35+53 | 3,06 | 3,06 | 4,59 | | | 3,21 | 10,71 | 11,78 | 0,38 | 2,55 | 3,05 | 4,21 | 3,83 |
| 35+35+70 | 2,69 | 2,69 | 5,39 | | | 3,23 | 10,78 | 11,86 | 0,38 | 2,53 | 3,03 | 4,27 | 3,85 |
| 35+53+53 | 2,70 | 4,05 | 4,05 | | | 3,24 | 10,80 | 11,88 | 0,37 | 2,48 | 2,97 | 4,36 | 3,82 |
| 26+26+26+26 | 2,71 | 2,71 | 2,71 | 2,71 | | 3,25 | 10,84 | 11,93 | 0,41 | 2,76 | 3,31 | 3,93 | 3,80 |
| 26+26+26+35 | 2,49 | 2,49 | 2,49 | 3,32 | | 3,23 | 10,78 | 11,86 | 0,39 | 2,63 | 3,15 | 4,10 | 3,85 |
| 26+26+26+53 | 2,15 | 2,15 | 2,15 | 4,29 | | 3,22 | 10,73 | 11,80 | 0,38 | 2,52 | 3,02 | 4,26 | 3,79 |
| 26+26+35+35 | 2,33 | 2,33 | 3,10 | 3,10 | | 3,26 | 10,87 | 11,95 | 0,38 | 2,56 | 3,07 | 4,25 | 3,88 |
| 26+26+35+53 | 2,02 | 2,02 | 2,69 | 4,04 | | 3,23 | 10,77 | 11,84 | 0,37 | 2,48 | 2,98 | 4,33 | 3,81 |
| 26+35+35+35 | 2,15 | 2,87 | 2,87 | 2,87 | | 3,23 | 10,75 | 11,83 | 0,38 | 2,50 | 3,00 | 4,30 | 3,87 |
| 35+35+35+35 | 2,70 | 2,70 | 2,70 | 2,70 | | 3,24 | 10,79 | 11,87 | 0,37 | 2,46 | 2,96 | 4,38 | 3,90 |
| 35+35+35+53 | 2,41 | 2,41 | 2,41 | 3,62 | | 3,25 | 10,85 | 11,93 | 0,37 | 2,44 | 2,93 | 4,44 | 3,85 |
| EXT5M120R | | | | | | | | | | | | | |
| 26+35 | 2,72 | 3,63 | | | | 1,91 | 6,35 | 6,99 | 0,26 | 1,76 | 2,12 | 3,60 | 3,30 |
| 26+53 | 2,71 | 5,43 | | | | 2,44 | 8,14 | 8,95 | 0,35 | 2,34 | 2,81 | 3,48 | 3,23 |
| 26+70 | 2,72 | 7,24 | | | | 2,99 | 9,96 | 10,95 | 0,46 | 3,05 | 3,66 | 3,26 | 3,29 |
| 35+35 | 3,59 | 3,59 | | | | 2,15 | 7,17 | 7,89 | 0,29 | 1,95 | 2,34 | 3,68 | 3,38 |
| 35+53 | 3,62 | 5,43 | | | | 2,71 | 9,05 | 9,95 | 0,39 | 2,57 | 3,08 | 3,52 | 3,35 |
| 35+70 | 3,63 | 7,26 | | | | 3,27 | 10,88 | 11,97 | 0,50 | 3,31 | 3,97 | 3,29 | 3,34 |
| 53+53 | 5,48 | 5,48 | | | | 3,29 | 10,96 | 12,06 | 0,51 | 3,41 | 4,09 | 3,22 | 3,26 |
| 53+70 | 5,29 | 7,05 | | | | 3,70 | 12,34 | 13,57 | 0,60 | 4,03 | 4,83 | 3,06 | 3,24 |
| 26+26+26 | 2,71 | 2,71 | 2,71 | | | 2,44 | 8,14 | 8,95 | 0,33 | 2,20 | 2,64 | 3,70 | 3,37 |
| 26+26+35 | 2,72 | 2,72 | 3,62 | | | 2,72 | 9,05 | 9,96 | 0,36 | 2,43 | 2,92 | 3,72 | 3,44 |
| 26+26+53 | 2,72 | 2,72 | 5,44 | | | 3,27 | 10,89 | 11,98 | 0,48 | 3,17 | 3,80 | 3,44 | 3,37 |
| 26+26+70 | 2,65 | 2,65 | 7,06 | | | 3,71 | 12,35 | 13,59 | 0,56 | 3,73 | 4,47 | 3,31 | 3,36 |
| 26+35+35 | 2,72 | 3,63 | 3,63 | | | 2,99 | 9,97 | 10,97 | 0,40 | 2,70 | 3,24 | 3,69 | 3,49 |
| 26+35+53 | 2,73 | 3,64 | 5,46 | | | 3,55 | 11,83 | 13,01 | 0,52 | 3,47 | 4,16 | 3,41 | 3,41 |
| 26+35+70 | 2,47 | 3,29 | 6,58 | | | 3,70 | 12,33 | 13,56 | 0,54 | 3,59 | 4,31 | 3,43 | 3,42 |
| 26+53+53 | 2,47 | 4,94 | 4,94 | | | 3,70 | 12,35 | 13,58 | 0,53 | 3,51 | 4,22 | 3,51 | 3,38 |
| 26+53+70 | 2,17 | 4,34 | 5,78 | | | 3,69 | 12,29 | 13,52 | 0,51 | 3,42 | 4,10 | 3,60 | 3,41 |
| 35+35+35 | 3,63 | 3,63 | 3,63 | | | 3,27 | 10,90 | 11,99 | 0,45 | 2,97 | 3,56 | 3,67 | 3,52 |
| 35+35+53 | 3,52 | 3,52 | 5,29 | | | 3,70 | 12,33 | 13,57 | 0,53 | 3,53 | 4,24 | 3,49 | 3,44 |
| 35+35+70 | 3,10 | 3,10 | 6,20 | | | 3,72 | 12,41 | 13,65 | 0,52 | 3,49 | 4,19 | 3,56 | 3,47 |
| 35+53+53 | 3,11 | 4,66 | 4,66 | | | 3,73 | 12,42 | 13,67 | 0,51 | 3,42 | 4,10 | 3,63 | 3,43 |
| 35+53+70 | 2,74 | 4,12 | 5,49 | | | 3,70 | 12,35 | 13,58 | 0,50 | 3,34 | 4,00 | 3,70 | 3,45 |
| 26+26+26+26 | 2,73 | 2,73 | 2,73 | 2,73 | | 3,28 | 10,92 | 12,01 | 0,47 | 3,13 | 3,75 | 3,49 | 3,40 |
| 26+26+26+35 | 2,73 | 2,73 | 2,73 | 3,64 | | 3,55 | 11,82 | 13,00 | 0,51 | 3,40 | 4,07 | 3,48 | 3,44 |
| 26+26+26+53 | 2,48 | 2,48 | 2,48 | 4,97 | | 3,73 | 12,42 | 13,66 | 0,54 | 3,60 | 4,32 | 3,45 | 3,37 |
| 26+26+26+70 | 2,18 | 2,18 | 2,18 | 5,81 | | 3,71 | 12,35 | 13,59 | 0,53 | 3,51 | 4,21 | 3,52 | 3,40 |
| 26+26+35+35 | 2,64 | 2,64 | 3,51 | 3,51 | | 3,69 | 12,30 | 13,53 | 0,52 | 3,49 | 4,18 | 3,53 | 3,46 |
| 26+26+35+53 | 2,32 | 2,32 | 3,09 | 4,63 | | 3,71 | 12,35 | 13,59 | 0,52 | 3,45 | 4,14 | 3,58 | 3,41 |
| 26+26+35+70 | 2,05 | 2,05 | 2,73 | 5,46 | | 3,69 | 12,29 | 13,52 | 0,50 | 3,36 | 4,03 | 3,66 | 3,43 |
| 26+35+35+35 | 2,47 | 3,29 | 3,29 | 3,29 | | 3,71 | 12,36 | 13,59 | 0,52 | 3,47 | 4,16 | 3,56 | 3,47 |
| 26+35+35+53 | 2,19 | 2,92 | 2,92 | 4,38 | | 3,72 | 12,42 | 13,66 | 0,51 | 3,43 | 4,12 | 3,62 | 3,44 |
| 26+35+35+70 | 1,95 | 2,60 | 2,60 | 5,20 | | 3,70 | 12,34 | 13,58 | 0,50 | 3,35 | 4,02 | 3,68 | 3,45 |
| 35+35+35+35 | 3,10 | 3,10 | 3,10 | 3,10 | | 3,72 | 12,41 | 13,65 | 0,51 | 3,39 | 4,07 | 3,66 | 3,52 |
| 35+35+35+53 | 2,74 | 2,74 | 2,74 | 4,11 | | 3,70 | 12,33 | 13,56 | 0,50 | 3,31 | 3,97 | 3,73 | 3,47 |
| 35+35+35+70 | 2,48 | 2,48 | 2,48 | 4,95 | | 3,72 | 12,38 | 13,62 | 0,49 | 3,29 | 3,95 | 3,76 | 3,48 |
| 26+26+26+26+26 | 2,46 | 2,46 | 2,46 | 2,46 | 2,46 | 3,69 | 12,31 | 13,54 | 0,50 | 3,30 | 3,96 | 3,73 | 3,50 |
| 26+26+26+26+35 | 2,32 | 2,32 | 2,32 | 2,32 | 3,10 | 3,72 | 12,39 | 13,63 | 0,48 | 3,20 | 3,84 | 3,87 | 3,53 |
| 26+26+26+26+53 | 2,05 | 2,05 | 2,05 | 2,05 | 4,10 | 3,69 | 12,30 | 13,53 | 0,47 | 3,13 | 3,75 | 3,93 | 3,47 |
| 26+26+26+26+70 | 1,85 | 1,85 | 1,85 | 1,85 | 4,94 | 3,70 | 12,35 | 13,58 | 0,47 | 3,12 | 3,74 | 3,96 | 3,48 |
| 26+26+26+35+35 | 2,19 | 2,19 | 2,19 | 2,92 | 2,92 | 3,72 | 12,41 | 13,65 | 0,47 | 3,16 | 3,79 | 3,93 | 3,54 |
| 26+26+26+35+53 | 1,94 | 1,94 | 1,94 | 2,59 | 3,89 | 3,69 | 12,31 | 13,54 | 0,46 | 3,09 | 3,71 | 3,98 | 3,49 |
| 26+26+26+35+70 | 1,76 | 1,76 | 1,76 | 2,35 | 4,71 | 3,71 | 12,35 | 13,59 | 0,46 | 3,08 | 3,70 | 4,01 | 3,49 |
| 26+26+35+35+35 | 2,05 | 2,05 | 2,73 | 2,73 | 2,73 | 3,69 | 12,29 | 13,52 | 0,46 | 3,07 | 3,68 | 4,00 | 3,57 |
| 26+26+35+35+53 | 1,85 | 1,85 | 2,47 | 2,47 | 3,70 | 3,70 | 12,33 | 13,56 | 0,46 | 3,06 | 3,67 | 4,03 | 3,51 |
| 26+26+35+35+70 | 1,69 | 1,69 | 2,25 | 2,25 | 4,50 | 3,71 | 12,37 | 13,61 | 0,46 | 3,05 | 3,66 | 4,05 | 3,50 |
| 26+35+35+35+35 | 1,95 | 2,60 | 2,60 | 2,60 | 2,60 | 3,71 | 12,35 | 13,59 | 0,46 | 3,05 | 3,66 | 4,05 | 3,59 |
| 26+35+35+35+53 | 1,77 | 2,36 | 2,36 | 2,36 | 3,54 | 3,72 | 12,39 | 13,63 | 0,46 | 3,03 | 3,64 | 4,08 | 3,52 |
| 35+35+35+35+35 | 2,47 | 2,47 | 2,47 | 2,47 | 2,47 | 3,71 | 12,37 | 13,61 | 0,45 | 3,02 | 3,62 | 4,10 | 3,61 |
| 35+35+35+35+53 | 2,25 | 2,25 | 2,25 | 2,25 | 3,38 | 3,72 | 12,40 | 13,64 | 0,45 | 3,01 | 3,61 | 4,12 | 3,54 |

*Technical data referring to pairing with Lys R3 range indoor units

# Commercial Monosplit Outdoor Units

## DC inverter

3.5 kW÷16.1 kW

COMMERCIAL

TREATMENT GOLDEN FIN | INVERTER TECHNOLOGY | ON-BOARD UNIT DIAGNOSTICS | OPERATING TEMPERATURE -20/+50°C

- **Golden Fin**: exclusive anti-corrosion coating that enables the finned heat exchanger coil to withstand salty air, rain, and other corrosive elements. In addition, it effectively prevents bacterial growth and improves thermal efficiency. The Golden Fin treatment also guarantees the maintenance of optimal performance over the long term.
- **Inverter compressor**: the inverter compressor ensures high energy efficiency even at partial loads. When individual rooms reach the desired temperature and the power demand decreases, the compressor automatically adapts, ensuring significant energy savings.
- Thanks to the **active power factor control**, the multisplit outdoor units are always able to maintain optimal phase synchronization. The Cosφ value always remains between 0.88 and 0.99.
- **Wide modulation range**: the advanced Inverter technology allows the compressor to modulate the operating frequency from 20 Hz up to 105 Hz, ensuring maximum operating flexibility.
- **Guaranteed operation**: commercial outdoor units operate normally even when the supply voltage is unstable.
- **On-board unit diagnostics**: when necessary, it is possible to access the on-board unit display to quickly identify any notification codes without needing to access the individual indoor units. Consulting the maintenance manual at the same time simplifies field verification operations.
- **High performance**: The outdoor unit electronics are cooled by the refrigerant gas to significantly improve the performance and stability of the outdoor unit in the presence of high ambient temperatures. This technology can improve heat dissipation by up to 500%. The electrical panel of the outdoor unit has been equipped with as many as 4 ventilation grilles for better heat dissipation. The new compressor ensures stable performance even under high outdoor temperature conditions (models 71 to 176 only).

## Example wiring diagram Outdoor Mono Commercial (single-phase) + Indoor

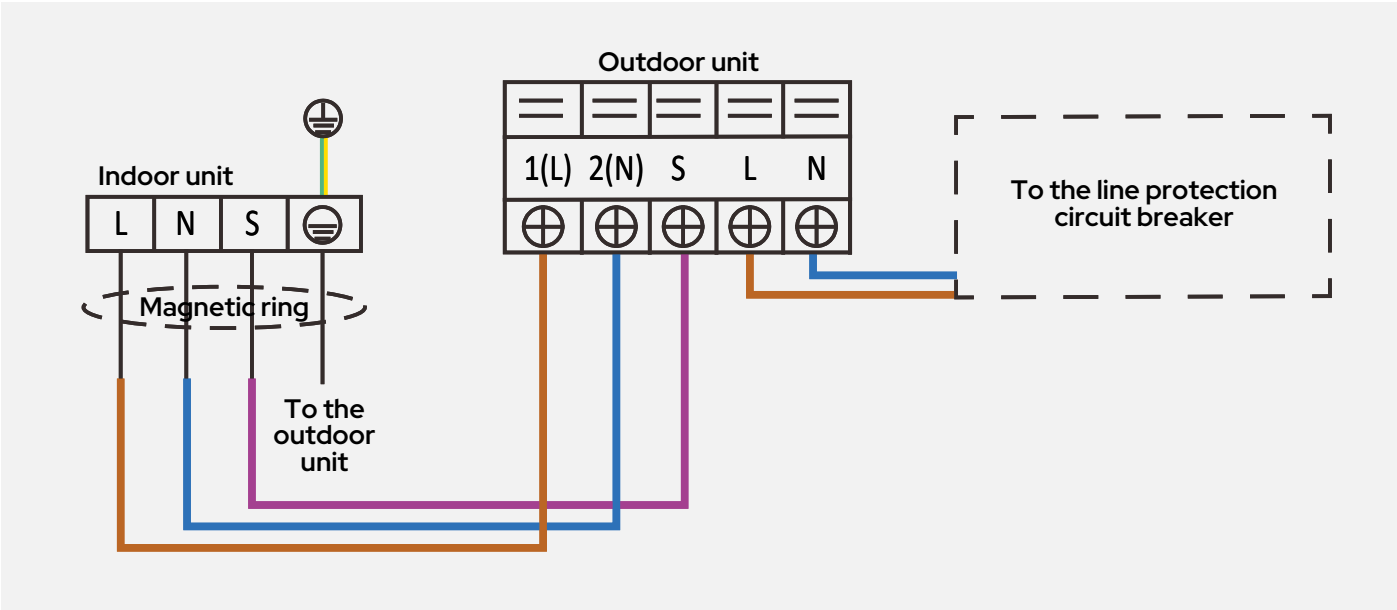

| | | | UECS 26R2 | UECS 35R | UECS 53R | UECS 71R2 | UECS 105R-1 | UECS 105R | UECS 130R2 | UECS 176R2 |
|---|---|---|---|---|---|---|---|---|---|---|
| **Compressor** | Type | | Rotary Inverter | | | | | | | |
| | Number | | 1 | | | | | | | |
| | Refrigerant oil (type) | | ESTER OIL VG74 | | | | | | | |
| | Refrigerant oil (quantity) | ml | 300 | 300 | 440 | 620 | 1000 | 1000 | 1400 | 1400 |
| **Power supply** | Power supply | V~, Ph, Hz | 230, 1, 50 | 230, 1, 50 | 230, 1, 50 | 230, 1, 50 | 230, 1, 50 | 380, 3, 50 | 380, 3, 50 | 380, 3, 50 |
| **Refrigerant** | Type | | R32 | | | | | | | |
| | Refrigerant quantity | kg | 0,65 | 0, 71 | 1,15 | 1,40 | 2,40 | 2,40 | 2,90 | 3,20 |
| | Refrigerant quantity in tons of CO2 equivalent (GWP) | Ton | 675 | | | | | | | |
| | Maximum length with standard charge | m | 5 | 5 | 5 | 5 | 5 | 5 | 5 | 5 |
| | Additional load | g/m | 12 | 12 | 12 | 24 | 24 | 24 | 24 | 24 |
| | Maximum height difference between outdoor and indoor unit | m | 10 | 10 | 20 | 25 | 30 | 30 | 30 | 30 |
| | Maximum length with additional charge | m | 25 | 25 | 30 | 50 | 75 | 75 | 75 | 75 |
| | Height difference between indoor units | m | 10 | 10 | 20 | 25 | 30 | 30 | 30 | 30 |
| | Gas connections (1) | mm | Ø9.53 | | Ø12.7 | Ø15.9 | | | | |
| | | inch | 3/8" | | 1/2" | 5/8" | | | | |
| | Liquid connections | mm | Ø6.35 | | | Ø9.53 | | | | |
| | | inch | 1/4" | | | 3/8" | | | | |
| **Outdoor unit fans** | Type | | Axial | | | | | | | |
| | Number | | 1 | | | | | | | |
| | Nominal air flow rate | $m^3/h$ | 2.200 | 2.200 | 2.100 | 3.500 | 4.000 | 4.000 | 5.600 | 7.500 |
| **Operating limits** | Outdoor temperature in cooling min/max | °C | -15 / +50 | -15 / +50 | -15 / +50 | -15 / +50 | -15 / +50 | -15 / +50 | -15 / +50 | -15 / +50 |
| | Outdoor temperature in heating min/max | °C | -20 / +24 | -20 / +24 | -20 / +24 | -20 / +24 | -20 / +24 | -20 / +24 | -20 / +24 | -20 / +24 |
| **Sound data** | Sound pressure level outdoor unit | dB(A) | 53,5 | 55,5 | 59 | 60 | 60 | 65 | 64,5 | 64 |
| | Sound power level outdoor unit | dB(A) | 62 | 53,6 | 59 | 60 | 63 | 63 | 63,5 | 75 |
| **Dimensional data** | Net dimensions (WxHxD) | mm | 835x555x274 | | 874x554x 307 | 955x675x 325 | 1,030x810x410 | | 1.073x975x397 | |
| | Net weight | Kg | 24,6 | 24,6 | 32,5 | 41,9 | 80,5 | 66,9 | 90 | 92 |

Performance data referring to the use of 26-size indoor units, no height difference, pipe length 5 m.
(1) Refer to the indoor units table for the piping section.
Cooling test conditions: indoor 27°C d.b. / 19.5°C w.b. – outdoor 35°C d.b. / 24°C w.b. – Heating test conditions: indoor 20°C d.b. – outdoor 7°C d.b. / 6°C w.b.
For system power consumption, refer to the outdoor unit nameplate

## Price list

| | UECS26R2 | UECS35R | UECS53R | UECS71R2 | UECS105R-1 | UECS105R | UECS130R2 | UECS176R2 |
|---|---|---|---|---|---|---|---|---|
| **Code** | 0101619#040000261 | 0101619#040000351 | 0101619#040000531 | 0101624#040000711 | 0101619#040011051 | 0101619#040001051 | 0101619#040001301 | 0101619#040001781 |
| **€** | 901 | 939 | 1.307 | 1.660 | 2.795 | 2.841 | 3.336 | 3.763 |

## Parallel Systems

*Double parallel system*

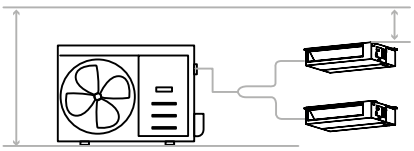

*Triple parallel system*

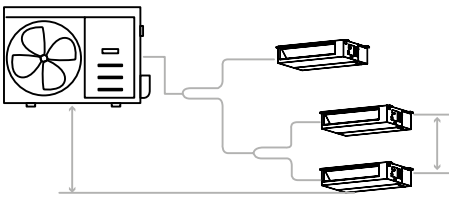

*Four-unit parallel system*

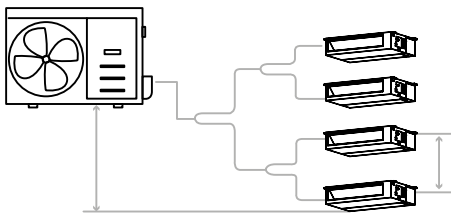

Refer to the dedicated page of the following catalogue for details.

# Commercial Monosplit Cassette

## DC fan cassette type indoor unit

2.1 kW÷5.3 kW

COMMERCIAL

WI-FI READY accessory | INFRARED REMOTE CONTROL included | CONDENSATE DRAIN PUMP | REMOTE ON/OFF INPUT | FRESH AIR ACTIVATION CONTACT | FRESH AIR INTAKE PROVISION | AUTOMATIC DIAGNOSIS | AUTOMATIC DEFROST | AUTOMATIC SEASON CHANGEOVER | DC INVERTER FAN MOTOR | CONDENSATION CONTROL | PREPARED FOR SIDE AIR SIZES 71 TO 176 | LOUVER POSITION MEMORY | AUTO RE-START | COMPATIBLE WITH PARALLEL SYSTEM

## Accessories

**Infrared remote control with wall mount**
Included

**Smart Wi-Fi Gateway Port**
Accessory supplied separately

**Airset-C Wi-Fi remote control**
Accessory sold separately

| | | | CCST26R1 | CCST35R1 | CCST53R1 | CCST71R |
|---|---|---|---|---|---|---|
| **Cooling** | Cooling capacity | kW | 2,64 | 3,51 | 5,27 | 7,03 |
| | | BTU/h | 9.000 | 12.000 | 18.000 | 21.000 |
| | Electrical power input * | kW | 0,81 | 1,01 | 1,63 | 2,32 |
| | Current drawn * | A | 3,6 | 4,45 | 7,2 | 10,2 |
| | S.E.E.R. | W/W | 6.3 - A++ | 6.6 - A++ | 6.3 - A++ | 6.2 - A++ |
| **Heating** | Heating capacity | kW | 2,93 | 3,80 | 5,57 | 7,62 |
| | | BTU/h | 10.000 | 13.000 | 17.870 | 26.000 |
| | Electrical power input * | kW | 0,95 | 1,01 | 1,54 | 1,90 |
| | Current drawn * | A | 4,2 | 4,73 | 6,8 | 8,50 |
| | S.C.O.P. Medium range | W/W | 4.1 - A+ | 4.1 - A+ | 4.0 - A+ | 4.0 - A+ |
| | S.C.O.P. Warm climate zone | W/W | 5.1 - A+++ | 5.1 - A+++ | 4.8 - A++ | 5.1 - A+++ |
| **Indoor unit fans** | Number | | 1 | | | |
| | Nominal air flow rate | $m^3/h$ | 580/500/300 | 620/510/420 | 720/620/500 | 1300/1140/1000 |
| **Indoor unit heat exchanger** | Internal heat exchanger type | | Aluminum | | | |
| | Nominal outside diameter | mm | 7 | 7 | 7 | 7 |
| | Rows | no. | 1 | 1 | 2 | 2 |
| | Circuits | no. | 2 | 2 | 4 | 4 |
| | Heat exchanger fin | | Hydrophilic aluminum | | | |
| **Electrical data** | Power supply | V~, Ph, Hz | 230, 1, 50 | | | |
| **Sound data** | Sound pressure level | dB(A) | 37/35,5,/33 | 42/37,5/34,5 | 45,4/44/39 | 50/47,5/42 |
| | Sound power level | dB(A) | 52 | 52 | 55 | 59 |
| **Pipe length** | | m | ≤ 25 | ≤ 25 | ≤ 30 | ≤ 50 |
| **Height difference between units** | | m | ≤ 10 | ≤ 10 | ≤ 20 | ≤ 25 |
| **Refrigerant line diameters** | Gas connections | mm | Ø9,53 | Ø9,53 | Ø12,7 | Ø15,9 |
| | | inch | 3/8" | 3/8" | 1/2" | 5/8" |
| | Liquid connections | mm | Ø6,35 | Ø6,35 | Ø6,35 | Ø9.53 |
| | | inch | 1/4" | 1/4" | 1/4" | 3/8" |
| **Dimensional data** | Dimensions of the main unit (WxHxD) | mm | 570x570x245 | 570x570x245 | 570x570x245 | 830x830x205 |
| | Panel dimensions (WxHxD) | mm | 620x620x50 | 620x620x50 | 620x620x50 | 950x950x55 |
| | Net weight | kg | 14,5 | 16,3 | 16,3 | 21,6 |

(*) Value refers to the sum of the power input of the outdoor unit + indoor unit (separate power supplies)
(1) Combined with single-phase outdoor unit

Cooling test conditions: indoor 27°C d.b. / 19.5°C w.b. - outdoor 35°C d.b. / 24°C w.b.
Heating test conditions: indoor 20°C d.b. - outdoor 7°C d.b. / 6°C w.b.

# Monosplit Cassette Commercial

## DC fan cassette type indoor unit

2.1 kW÷5.3 kW

COMMERCIAL

| | | | CCST105R(1) | CCST105R | CCST130R | CCST176R |
|---|---|---|---|---|---|---|
| **Cooling** | Cooling capacity | kW | 10,55 | 10,01 | 14,07 | 15,24 |
| | | BTU/h | 33.950 | 34.160 | 44.110 | 53.000 |
| | Electrical power input * | kW | 3,95 | 3,04 | 4,65 | 5,00 |
| | Current drawn * | A | 17,5 | 6,5 | 8,1 | 8,6 |
| | S.E.E.R. | W/W | 6.7 - A++ | 6.7 - A++ | 6.1 - A++ | 6.3 - A++ |
| **Heating** | Heating capacity | kW | 11,14 | 11,14 | 16,12 | 18,17 |
| | | BTU/h | 38.000 | 38.000 | 52.670 | 62.000 |
| | Electrical power input * | kW | 3,00 | 3,00 | 4,58 | 5,55 |
| | Current drawn * | A | 13,50 | 5,0 | 8,00 | 9,60 |
| | S.C.O.P. Medium range | W/W | 4.0 - A+ | 4.0 - A+ | 4.0 - A+ | 4.0 - A+ |
| | S.C.O.P. Warm climate zone | W/W | 5.1 - A+++ | 5.1 - A+++ | 5.0 - A++ | 5.1 - A+++ |
| **Indoor unit fans** | Number | | 1 | | | |
| | Nominal air flow rate | $m^3/h$ | 1700/1550/1380 | 1700/1550/1380 | 1970/1780/1580 | 2000/1850/1650 |
| **Indoor unit heat exchanger** | Internal heat exchanger type | | Aluminum | | | |
| | Nominal outside diameter | mm | 7 | 7 | 7 | 7 |
| | Rows | no. | 3 | 3 | 3 | 3 |
| | Circuits | no. | 10 | 10 | 10 | 10 |
| | Heat exchanger fin | | Hydrophilic aluminum | | | |
| **Electrical data** | Power supply | V~, Ph, Hz | 230, 1, 50 | | | |
| **Sound data** | Sound pressure level | dB(A) | 51/49/46 | 51/49/46 | 52,5/50,5/48 | 54,5/52/49,5 |
| | Sound power level | dB(A) | 63 | 63 | 65 | 66 |
| **Pipe length** | | m | ≤ 75 | ≤ 75 | ≤ 75 | ≤ 75 |
| **Height difference between units** | | m | ≤ 30 | ≤ 30 | ≤ 30 | ≤ 30 |
| **Refrigerant line diameters** | Gas connections | mm | Ø15,9 | Ø15,9 | Ø15,9 | Ø15,9 |
| | | inch | 5/8" | 5/8" | 5/8" | 5/8" |
| | Liquid connections | mm | Ø9.53 | Ø9.53 | Ø9.53 | Ø9.53 |
| | | inch | 3/8" | 3/8" | 3/8" | 3/8" |
| **Dimensional data** | Dimensions of the main unit (WxHxD) | mm | 830x830x245 | 830x830x245 | 830x830x287 | 830x830x287 |
| | Panel dimensions (WxHxD) | mm | 950x950x55 | 950x950x55 | 950x950x55 | 950x950x55 |
| | Net weight | kg | 27,2 | 27,2 | 29,3 | 29,3 |

(*) Value refers to the sum of the power input of the outdoor unit + indoor unit (separate power supplies)
(1) Combined with single-phase outdoor unit

Cooling test conditions: indoor 27°C d.b. / 19.5°C w.b. - outdoor 35°C d.b. / 24°C w.b.
Heating test conditions: indoor 20°C d.b. - outdoor 7°C d.b. / 6°C w.b.

## Price list

| | CCST26R1 | CCST35R1 | CCST53R1 | CCST71R | CCST105R (1) | CCST105R | CCST130R | CCST176R |
|---|---|---|---|---|---|---|---|---|
| **Machine Code** | 0101623#040200260 | 0101623#040200350 | 0101623#040200530 | 0101619#040200710 | 0101619#040201050 | 0101619#040201050 | 0101619#040201400 | 0101619#040201760 |
| **Panel Code** | 0101425#33020 | 0101425#33020 | 0101425#33020 | 0101425#34020 | 0101425#34020 | 0101425#34020 | 0101425#34020 | 0101425#34020 |
| **€** | 895 | 917 | 1027 | 1.183 | 1.349 | 1.349 | 1.476 | 1.640 |

| **ACCESSORIES SUPPLIED SEPARATELY** | | **Code** | **€** |
|---|---|---|---|
| SMART PORT | Gateway Wi-Fi | 0101819#120035 | 160 |
| AIRSET-C | Digital remote control with Wi-Fi for individual control | 011049#0100 | 169 |
| RFTD-01D | Fitting for conversion to Twin system | 012109#010076 | 201 |

# Ducted Commercial Monosplit

## Ductable indoor unit with DC fan, Wi-Fi

2.6 kW÷5.3 kW

COMMERCIAL

STANDARD WI-FI | AIRSET-C WIRED REMOTE CONTROLLER included | CONDENSATE DRAIN PUMP | REMOTE ON/OFF INPUT | FRESH AIR ACTIVATION CONTACT | ALARM SIGNALLING CONTACT | FRESH AIR INTAKE PROVISION | AUTOMATIC DIAGNOSIS | AUTOMATIC DEFROST | AUTOMATIC SEASON CHANGEOVER | DC INVERTER FAN MOTOR

CONDENSATION CONTROL | FREE INSTALLATION sizes 53 and 71 only | AUTO RE-START | ESP SETTINGS | COMPATIBLE WITH PARALLEL SYSTEM

## Accessories

**Airset-C Wi-Fi remote control**
Included

**Infrared remote control with wall-mount support**
Accessory supplied separately

**Smart Wi-Fi Gateway Port**
Accessory supplied separately

| | | | DUCT26R2 | DUCT35R2 | DUCT53R2 | DUCT71R2 |
|---|---|---|---|---|---|---|
| **Cooling** | Cooling capacity | kW | 2,64 | 3,51 | 5,27 | 7,03 |
| | | BTU/h | 9.000 | 12.000 | 18.000 | 24.000 |
| | Electrical power input * | kW | 0,72 | 1,85 | 1,53 | 2,19 |
| | Current drawn * | A | 3,2 | 4,75 | 7,1 | 10,20 |
| | S.E.E.R. | W/W | 6.5 - A++ | 6.3 - A++ | 6.5 - A++ | 6.2 - A++ |
| **Heating** | Heating capacity | kW | 2,93 | 3,81 | 5,57 | 7,62 |
| | | BTU/h | 10.000 | 13.000 | 19.000 | 26.000 |
| | Electrical power input * | kW | 0,85 | 1,03 | 1,51 | 1,90 |
| | Current drawn * | A | 3,81 | 4,52 | 6,8 | 9,2 |
| | S.C.O.P. Medium range | W/W | 4.1 - A+ | 4.0 - A+ | 4.0 - A+ | 4.0 - A+ |
| | S.C.O.P. Warm climate zone | W/W | 5.1 - A+++ | 5.1 - A+++ | 5.1 - A+++ | 5.1 - A+++ |
| **Indoor unit fans** | Number | | 1 | | | |
| | Nominal air flow rate | $m^3/h$ | 620/540/450 | 660/570/470 | 900/780/650 | 1200/1000/700 |
| | Rated available static pressure | Pa | 25 | 25 | 25 | 25 |
| | Available static pressure (range) | Pa | 0 - 80 | 0 - 100 | 0 - 160 | 0 - 160 |
| **Indoor unit heat exchanger** | Internal heat exchanger type | | Copper Tube / Aluminum Fins | | | |
| | Nominal outside diameter | mm | 7 | 5 | 5 | 5 |
| | Rows | no. | 3 | | | |
| | Circuits | no. | 3 | 5 | 6 | 9 |
| **Electrical data** | Power supply | V~, Ph, Hz | 230, 1, 50 | | | |
| **Sound data** | Sound pressure level | dB(A) | 35/33/31 | 35/33/31 | 36,5/34/31 | 33,5/32,5/31 |
| | Sound power level | dB(A) | 54 | 52 | 53 | 56 |
| **Maximum pipe length** | | m | ≤ 25 | ≤ 25 | ≤ 30 | ≤ 50 |
| **Height difference between units** | | m | ≤ 10 | ≤ 10 | ≤ 20 | ≤ 25 |
| **Refrigerant line diameters** | Gas connections | mm | Ø9.53 | Ø9.53 | Ø12.7 | Ø15.9 |
| | | inch | 3/8" | 3/8" | 1/2" | 5/8" |
| | Liquid connections | mm | Ø6.35 | Ø6.35 | Ø6.35 | Ø9.53 |
| | | inch | 1/4" | 1/4" | 1/4" | 3/8" |
| **Dimensional data** | Net dimensions (WxHxD) | mm | 700x200x506 | 700x200x506 | 880x210x674 | 1.100x249x774 |
| | Net weight | kg | 16,6 | 16,6 | 24,4 | 31,8 |

(*) Value refers to the sum of the power input of the outdoor unit + indoor unit (separate power supplies)
(1) Evaluated at the nominal air flow rate, overcoming only the pressure drop of the coil
(2) Combined with single-phase outdoor unit

Cooling test conditions: indoor 27°C d.b. / 19.5°C w.b. – outdoor 35°C d.b. / 24°C w.b. – Heating test conditions: indoor 20°C d.b. – outdoor 7°C d.b. / 6°C w.b.

# Ducted Monosplit Commercial

## Ductable indoor unit with DC fan, Wi-Fi

2.6 kW÷5.3 kW

COMMERCIAL

| | | | DUCT105R2(2) | DUCT105R2 | DUCT130R2 | DUCT176R2 |
|---|---|---|---|---|---|---|
| **Cooling** | Cooling capacity | kW | 10,5 | 10,6 | 14,07 | 15,24 |
| | | BTU/h | 36.000 | 36.000 | 48.000 | 52.000 |
| | Electrical power input * | kW | 3,95 | 3,90 | 4,5 | 5,25 |
| | Current drawn * | A | 17,5 | 6 | 7 | 8,1 |
| | S.E.E.R. | W/W | 6.3 - A++ | 6.1 - A++ | 6.1 - A++ | 6.1 - A++ |
| **Heating** | Heating capacity | kW | 11,72 | 11,72 | 16,12 | 18,18 |
| | | BTU/h | 40.000 | 40.000 | 55.000 | 62.000 |
| | Electrical power input * | kW | 3,25 | 3,30 | 4,6 | 5,15 |
| | Current drawn * | A | 14,5 | 5,3 | 8 | 8,5 |
| | S.C.O.P. Medium range | W/W | 4.1 - A+ | 4.0 - A+ | 4.0 - A+ | 4.0 - A+ |
| | S.C.O.P. Warm climate zone | W/W | 5.1 - A+++ | 5.1 - A+++ | 5.1 - A+++ | 5.1 - A+++ |
| **Indoor unit fans** | Number | | 1 | | | |
| | Nominal air flow rate | $m^3/h$ | 1700/1400/1100 | 1700/1400/1100 | 2000/1700/1300 | 2200/1900/1500 |
| | Rated available static pressure | Pa | 37 | 37 | 50 | 50 |
| | Available static pressure (range) | Pa | 0 - 160 | 0 - 160 | 0 - 160 | 0 - 160 |
| **Indoor unit heat exchanger** | Internal heat exchanger type | | Copper Tube / Aluminum Fins | | | |
| | Nominal outside diameter | mm | 7 | 7 | 7 | 7 |
| | Rows | no. | 3 | 3 | 4 | 4 |
| | Circuits | no. | 9 | 9 | 9 | 9 |
| **Electrical data** | Power supply | V~, Ph, Hz | 230, 1, 50 | | | |
| **Sound data** | Sound pressure level | dB(A) | 39/37/34 | 39/37/34 | 43.5/41.5/39.5 | 44.5/43/41.5 |
| | Sound power level | dB(A) | 62 | 62 | 65 | 66 |
| **Maximum pipe length** | | m | ≤ 50 | ≤ 75 | ≤ 75 | ≤ 75 |
| **Height difference between units** | | m | ≤ 25 | ≤ 30 | ≤ 30 | ≤ 30 |
| **Refrigerant line diameters** | Gas connections | mm | Ø15.9 | Ø15.9 | Ø15.9 | Ø15.9 |
| | | inch | 5/8" | 5/8" | 5/8" | 5/8" |
| | Liquid connections | mm | Ø9.53 | Ø9.53 | Ø9.53 | Ø9.53 |
| | | inch | 3/8" | 3/8" | 3/8" | 3/8" |
| **Dimensional data** | Net dimensions (WxHxD) | mm | 1,200x245x750 | 1,200x245x750 | 1,200x245x750 | 1.200x300x750 |
| | Net weight | kg | 38,4 | 38,4 | 40,4 | 42,9 |

(*) Value refers to the sum of the power input of the outdoor unit + indoor unit (separate power supplies)
(1) Evaluated at the nominal air flow rate, overcoming only the pressure drop of the coil
(2) Combined with single-phase outdoor unit

Cooling test conditions: indoor 27°C d.b. / 19.5°C w.b. – outdoor 35°C d.b. / 24°C w.b. – Heating test conditions: indoor 20°C d.b. – outdoor 7°C d.b. / 6°C w.b.

## Price list

| | DUCT26R2 | DUCT35R2 | DUCT53R2 | DUCT71R2 | DUCT105R2(2) | DUCT105R2 | DUCT130R2 | DUCT176R2 |
|---|---|---|---|---|---|---|---|---|
| **Code** | 0101624#040300260 | 0101624#040300350 | 0101624#040300530 | 0101624#040300710 | 0101624#040301050 | 0101624#040301050 | 0101624#040301400 | 0101624#040301760 |
| **€** | 773 | 794 | 995 | 988 | 1.222 | 1.222 | 1.397 | 1.601 |

**ACCESSORIES SUPPLIED SEPARATELY**

| | | Code | € |
|---|---|---|---|
| Remote control | Infrared remote control | Z400-17317000A60224 | 39 |
| SMART PORT | Gateway Wi-Fi | 0101819#120035 | 160 |
| RFTD-01D | Fitting for conversion to Twin system | 012109#010076 | 201 |

# Commercial Monosplit Console

## DC fan console-type indoor unit

3.5 kW

COMMERCIAL

WI-FI READY accessory | INFRARED REMOTE CONTROL included | DISPLAY MACHINE EDGE | DOUBLE OUTLET AIR | AUTOMATIC DIAGNOSIS | AUTOMATIC DEFROST | CONDENSATION CONTROL | AUTO RE-START

## Accessories

**Infrared remote control with wall mount**
Included

**Smart Kit USB**
Accessory supplied separately

**Airset-C Wi-Fi remote control**
Accessory sold separately

| | | | CONS26R | CONS35R | CONS53R NEW |
|---|---|---|---|---|---|
| **Cooling** | Cooling capacity | kW | 2,64 | 3,52 | 4,98 |
| | | BTU/h | 9.000 | 12.000 | 17.000 |
| | Electrical power input * | kW | 0,65 | 1,0 | 1,5 |
| | Current drawn * | A | 4,5 | 4,52 | 6,70 |
| | S.E.E.R. | W/W | 7.8 - A++ | 7.3 - A++ | 6.7 - A++ |
| **Heating** | Heating capacity | kW | 2,93 | 3,81 | 5,27 |
| | | BTU/h | 10.000 | 13.000 | 18.000 |
| | Electrical power input * | kW | 0,71 | 0,98 | 1,42 |
| | Current drawn * | A | 3,32 | 4,43 | 6,40 |
| | S.C.O.P. Medium range | W/W | 4.1 - A+ | 4.0 - A+ | 4.0 - A+ |
| | S.C.O.P. Warm climate zone | W/W | 5.1 - A+++ | 5.5 - A+++ | 5.0 - A++ |
| **Indoor unit fans** | Number | | 1+1 | | |
| | Nominal air flow rate | $m^3/h$ | 600/510/400 | 650/580/490 | 780/690/600 |
| **Indoor unit heat exchanger** | Internal heat exchanger type | | Copper - Aluminum | | |
| | Nominal outside diameter | mm | 7 | | |
| | Rows | no. | 2 | | |
| | Circuits | no. | 2 | | |
| | Heat exchanger fin | | Hydrophilic aluminum | | |
| **Electrical data** | Power supply | V~, Ph, Hz | 230, 1, 50 | | |
| **Sound data** | Sound pressure level | dB(A) | 37/34/27 | 37/34/27 | 41/38/32 |
| | Sound power level | dB(A) | 54 | 54 | 55 |
| **Pipe length** | | m | ≤ 25 | ≤ 25 | ≤ 30 |
| **Height difference between units** | | m | ≤ 10 | ≤ 10 | ≤ 20 |
| **Refrigerant line diameters** | Gas connections | mm | Ø9,53 | Ø9,53 | Ø12,7 |
| | | inch | 3/8" | 3/8" | 1/2" |
| | Liquid connections | mm | Ø6,35 | Ø6,35 | Ø6,35 |
| | | inch | 1/4" | 1/4" | 1/4" |
| **Dimensional data** | Net dimensions (WxHxD) | mm | 794x621x200 | | |
| | Net weight | kg | 14,9 | | |

(*) Value refers to the sum of the power input of the outdoor unit + indoor unit (separate power supplies)
For system power consumption, refer to the outdoor unit nameplate

Cooling test conditions: indoor 27°C d.b. / 19.5°C w.b. – outdoor 35°C d.b. / 24°C w.b. – Heating test conditions: indoor 20°C d.b. – outdoor 7°C d.b. / 6°C w.b.

## Price list

| | CONS26R | CONS35R | CONS53R |
|---|---|---|---|
| **Code** | 0101619#040400260 | 0101619#040400350 | 0101619#040400530 |
| **€** | 773 | 798 | 824 |

**ACCESSORIES SUPPLIED SEPARATELY**

| | | Code | € |
|---|---|---|---|
| SMART KIT 2 | Wi-Fi dongle | 0101817#120035 | 95 |
| AIRSET-C | Digital remote control with Wi-Fi for individual control.<br>Can only be connected by installing the SPC accessory | 011049#0100 | 169 |
| SPC | Interface board | 0101819#130035 | 108 |
| | Connection diagram | 0101819#140035 | 54 |

# Ceiling Floor Commercial Monosplit

## Ceiling/floor type indoor unit
## DC fan

5.3 kW÷15.3 kW

COMMERCIAL

WI-FI READY accessory | INFRARED REMOTE CONTROL included | DOUBLE CONDENSATE DRAIN | REMOTE ON/OFF INPUT | AUTOMATIC DIAGNOSIS | FLEXIBLE INSTALLATION | AUTOMATIC DEFROST | CONDENSATION CONTROL | AUTOMATIC SEASON CHANGEOVER | COMPATIBLE WITH PARALLEL SYSTEM

## Accessories

**Infrared remote control with wall mount**
Included

**Smart Wi-Fi Gateway Port**
Accessory supplied separately

**Airset-C Wi-Fi remote control**
Accessory sold separately

| | | | SPV53R | SPV71R | SPV105R (1) | SPV105R | SPV130R | SPV176R |
|---|---|---|---|---|---|---|---|---|
| **Cooling** | Cooling capacity | kW | 5,27 | 7,03 | 10,55 | 10,55 | 14,07 | 15,83 |
| | | BTU/h | 18.000 | 24.000 | 36.000 | 36.000 | 48.000 | 54.000 |
| | Electrical power input * | kW | 1, 45 | 2,30 | 3,90 | 4,00 | 5,00 | 5,65 |
| | Current drawn * | A | 6,0 | 10,54 | 17,0 | 6,30 | 8,8 | 9,7 |
| | S.E.E.R. | W/W | 6.2 - A++ | 6.1 - A++ | 6.2 - A++ | 6.4 - A++ | 6.1 - A++ | 6.1 - A++ |
| **Heating** | Heating capacity | kW | 5,57 | 7,62 | 11,72 | 11,72 | 16,12 | 18,17 |
| | | BTU/h | 19.000 | 26.000 | 40.000 | 40.000 | 55.000 | 62.000 |
| | Electrical power input * | kW | 1,50 | 2,05 | 3,35 | 4,0 | 5,5 | 6,2 |
| | Current drawn * | A | 6,6 | 9,50 | 15,00 | 5,40 | 8,90 | 10,50 |
| | S.C.O.P. Medium range | W/W | 4.0 - A+ | 4.0 - A+ | 4.0 - A+ | 4.1 - A+ | 4.0 - A+ | 4.0 - A+ |
| | S.C.O.P. Warm climate zone | W/W | 5.1 - A+++ | 5.1 - A+++ | 5.1 - A+++ | 5.1 - A+++ | 5.1 - A+++ | 5.1 - A+++ |
| **Indoor unit fans** | Number | | 1 | 1 | 2 | 2 | 2 | 2 |
| | Nominal air flow rate | $m^3/h$ | 958 / 839 / 723 | 1192 / 1023 / 853 | 1955 / 1728 / 1504 | 1955 / 1728 / 1504 | 2100 / 1850 / 1600 | 2200 / 1950 / 1650 |
| **Indoor unit heat exchanger** | Internal heat exchanger type | | Copper Tube / Aluminum Fins | | | | | |
| | Nominal outside diameter | mm | 7 | 7 | 7 | 7 | 7 | 7 |
| | Rows | no. | 3 | 3 | 3 | 3 | 3 | 3 |
| | Circuits | no. | 7 | 7 | 10 | 10 | 10 | 10 |
| **Electrical data** | Power supply | V~, Ph, Hz | 230, 1, 50 | | | | | |
| **Sound data** | Sound pressure level | dB(A) | 44/41/37 | 51/47/43 | 51,5/48/45 | 51,5/48/45 | 53/50/46 | 55/52/48 |
| | Sound power level | dB(A) | | | | | | |
| **Pipe length** | | m | ≤ 30 | ≤ 50 | ≤ 75 | ≤ 75 | ≤ 75 | ≤ 75 |
| **Height difference between units** | | m | ≤ 20 | ≤ 25 | ≤ 30 | ≤ 30 | ≤ 30 | ≤ 30 |
| **Refrigerant line diameters** | Gas connections | mm | Ø12,7 | Ø15,9 | Ø15,9 | Ø15,9 | Ø15,9 | Ø15,9 |
| | | inch | 1/2" | 5/8" | | | | |
| | Liquid connections | mm | Ø6,35 | Ø9.53 | | | | |
| | | inch | 1/4" | 3/8" | | | | |
| **Dimensional data** | Net dimensions (WxHxD) | mm | 1.068x675x235 | | 1,650x675x235 | | | |
| | Net weight | kg | 28 | 28 | 41,5 | 41,5 | 41,7 | 42,3 |

(*) Value refers to the sum of the power input of the outdoor unit + indoor unit (separate power supplies)
For system power consumption, refer to the outdoor unit nameplate

Cooling test conditions: indoor 27°C d.b. / 19.5°C w.b. – outdoor 35°C d.b. / 24°C w.b. – Heating test conditions: indoor 20°C d.b. – outdoor 7°C d.b. / 6°C w.b.

## Price list

| | SPV53R | SPV71R | SPV105R (1) | SPV105R | SPV130R | SPV176R |
|---|---|---|---|---|---|---|
| **Code** | 0101619#040100530 | 0101619#040100710 | 0101619#040101050 | 0101619#040101050 | 0101619#040101400 | 0101619#040101760 |
| **€** | 979 | 1001 | 1.318 | 1.318 | 1.544 | 1.664 |

**ACCESSORIES SUPPLIED SEPARATELY**

| | | Code | € |
|---|---|---|---|
| SMART PORT | Gateway Wi-Fi | 0101819#120035 | 160 |
| AIRSET-C | Digital remote control with Wi-Fi for individual control | 011049#0100 | 169 |
| RFTD-01D | Fitting for conversion to Twin system | 012109#010076 | 201 |

# Commercial Monosplit Column

## DC fan floor-standing indoor unit

2.1 kW÷5.3 kW

COMMERCIAL

DISPLAY MACHINE EDGE | AUTOMATIC DIAGNOSIS | AUTOMATIC DEFROST | AUTO RE-START | AUTOMATIC PANEL OPENING

| | | | CLN130R |
|---|---|---|---|
| **Cooling** | Cooling capacity | kW | 14,06 |
| | | BTU/h | 48.000 |
| | Electrical power input * | kW | 4,95 |
| | Current drawn * | A | 8,00 |
| | S.E.E.R. | W/W | 6.1 - A++ |
| **Heating** | Heating capacity | kW | 16,11 |
| | | BTU/h | 55.000 |
| | Electrical power input * | kW | 5,10 |
| | Current drawn * | A | 8,5 |
| | S.C.O.P. Medium range | W/W | 4.0 - A+ |
| **Indoor unit fans** | Number | | 1 |
| | Nominal air flow rate | $m^3/h$ | 2413/2222/2027 |
| **Indoor unit heat exchanger** | Internal heat exchanger type | | Copper Tube / Aluminum Fins |
| | Nominal outside diameter | mm | 7 |
| | Rows | no. | 3 |
| | Circuits | no. | 7 |
| **Electrical data** | Power supply | V~, Ph, Hz | 230, 1, 50 |
| **Sound data** | Sound pressure level | dB(A) | 53/50/48 |
| | Sound power level | dB(A) | 67 |
| **Pipe length** | | m | 75 |
| **Height difference between units** | | m | 30 |
| **Refrigerant line diameters** | Gas connections | mm | Ø15,9 |
| | | inch | 5/8" |
| | Liquid connections | mm | Ø9.53 |
| | | inch | 3/8" |
| **Dimensional data** | Net dimensions (WxHxD) | mm | 1935x629x456 |
| | Net weight | kg | 59 |

(*) Value refers to the sum of the power input of the outdoor unit + indoor unit (separate power supplies)
Cooling test conditions: indoor 27°C d.b. / 19.5°C w.b. – outdoor 35°C d.b. / 24°C w.b. – Heating test conditions: indoor 20°C d.b. – outdoor 7°C d.b. / 6°C w.b.

## Price list

| | CLN130R |
|---|---|
| **Code** | 0101619#040501400 |
| **€** | 1.944 |

# Dimensional Drawings

## Dimensional drawings - Nevalis

MONOSPLIT

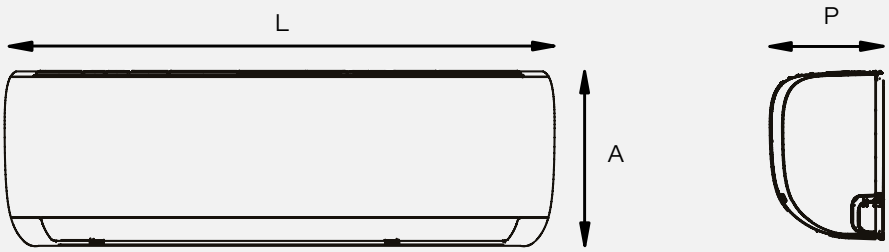


| | NVL26R | NVL35R | NVL53R | NVL70R |
|---|---|---|---|---|
| L | 723 | 813 | 975 | 1.055 |
| A | 286 | 289 | 308 | 330 |
| P | 199 | 201 | 218 | 231 |
| Kg | 7,5 | 8 | 10,2 | 13 |

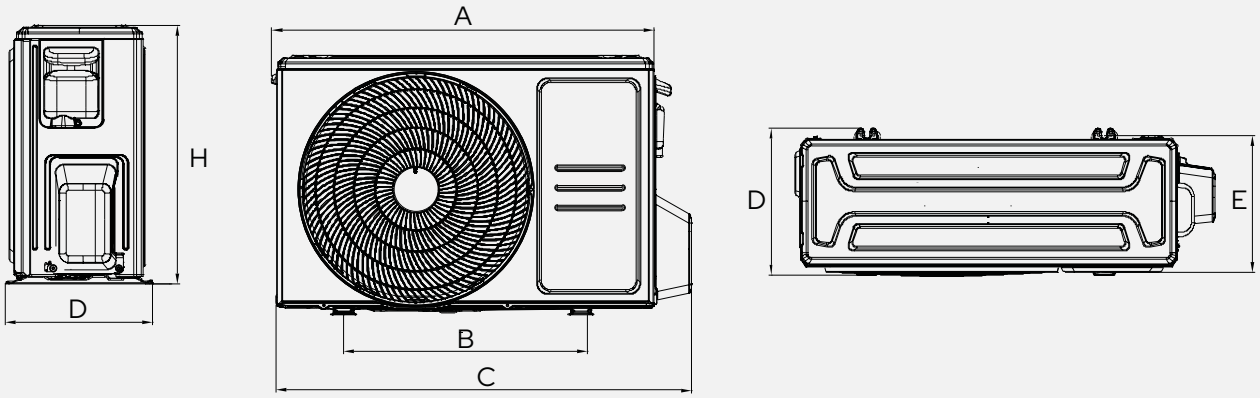


| | OUNVL26R | OUNVL35R | OUNVL53R | OUNVL70R |
|---|---|---|---|---|
| A | 784 | 784 | 895 | 895 |
| B | 452 | 452 | 663 | 663 |
| C | 835 | 835 | 955 | 955 |
| H | 555 | 555 | 673 | 673 |
| D | 303 | 303 | 380 | 380 |
| E | 286 | 286 | 348 | 348 |
| Kg | 23,1 | 23,1 | 37,8 | 41 |

Dimensions in mm

# Dimensional drawings - LYS R3

MONOSPLIT

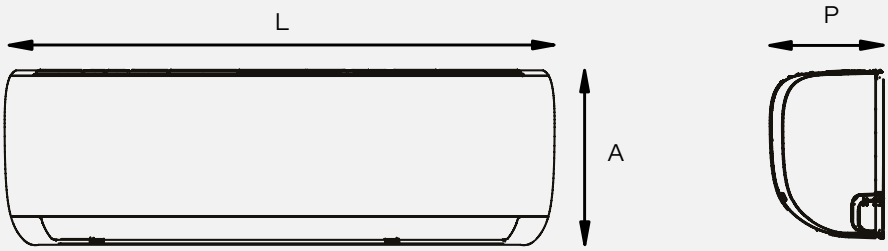


| | LDL26R3 | LDL35R3 | LDL53R3 | LDL70R3 |
|---|---|---|---|---|
| L | 715 | 805 | 957 | 1.040 |
| A | 285 | 285 | 302 | 327 |
| P | 194 | 194 | 213 | 220 |
| Kg | 6,7 | 7,3 | 10 | 12,3 |

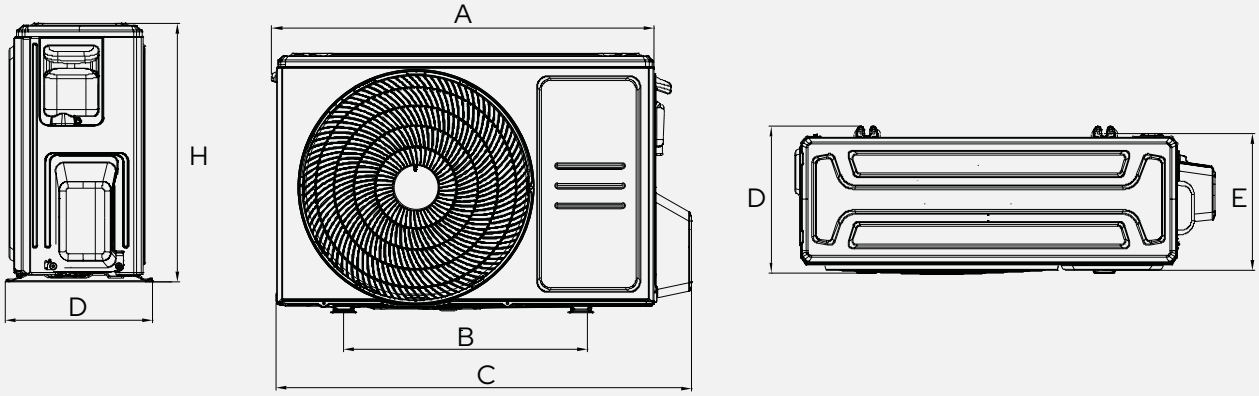


| | LDL26R3 | LDL35R3 | LDL53R3 | LDL70R3 |
|---|---|---|---|---|
| A | 727 | 727 | 815 | 855 |
| B | 452 | 514 | 540 | 511 |
| C | 790 | 790 | 870 | 914 |
| H | 495 | 495 | 554 | 702 |
| D | 270 | 270 | 333 | 363 |
| E | 256 | 256 | 340 | 350 |
| Kg | 21 | 21 | 32,7 | 42,9 |

Dimensions in mm

# Dimensional Drawings - Total-One

MULTISPLIT WITH HEAT RECOVERY

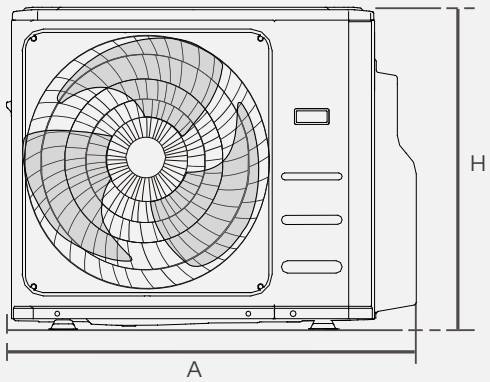


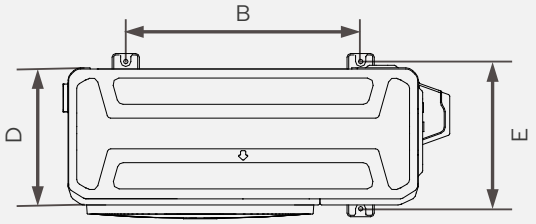


| | EXT3M53HR | EXT4M80HR1 |
|---|---|---|
| W | 890 | 1.034 |
| D | 342 | 387 |
| H | 673 | 810 |
| A | 663 | 673 |
| B | 354 | 403 |

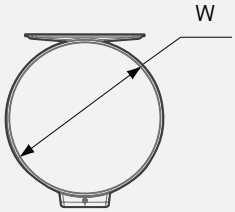


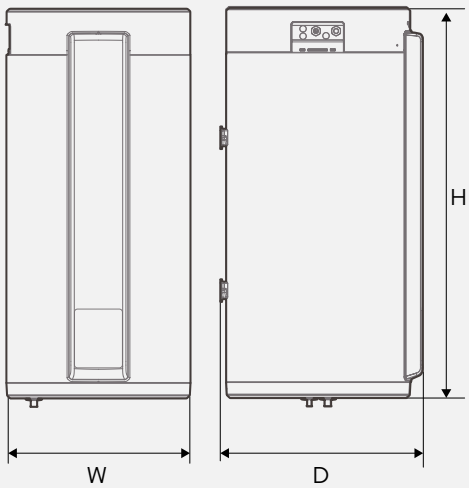


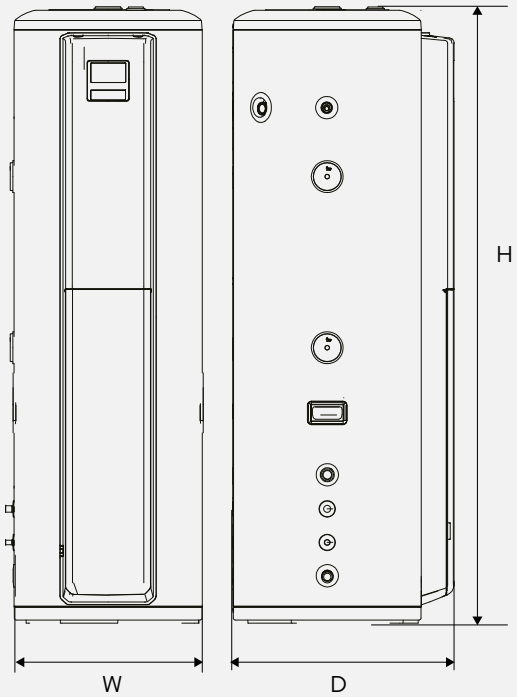


| | TNK100HR | TNK190HR |
|---|---|---|
| W | 500 | 504 |
| D | 550 | 574 |
| H | 1.060 | 1.660 |

Dimensions in mm

## Dimensional Drawings - EXT

MULTISPLIT

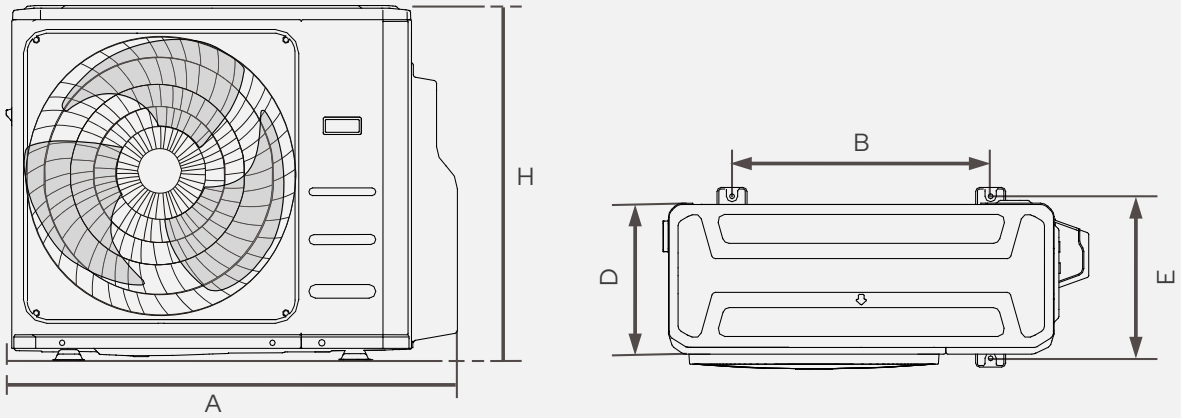


| | EXT2M42R | EXT2M53R | EXT3M62R | EXT3M80R1 | EXT4M82R | EXT4M105R | EXT5M120R |
|---|---|---|---|---|---|---|---|
| A | 877 | 877 | 895 | 895 | 1.034 | 1.034 | 1.034 |
| H | 554 | 544 | 673 | 673 | 810 | 810 | 810 |
| D | 307 | 307 | 335 | 335 | 387 | 387 | 387 |
| B | 511 | 511 | 663 | 663 | 673 | 673 | 673 |
| E | 317 | 317 | 348 | 348 | 403 | 403 | 403 |
| Kg | 31,8 | 35,5 | 46,8 | 51,1 | 62,1 | 68,8 | 74,1 |

Dimensions in mm

## Dimensional Drawings - UECS

COMMERCIAL

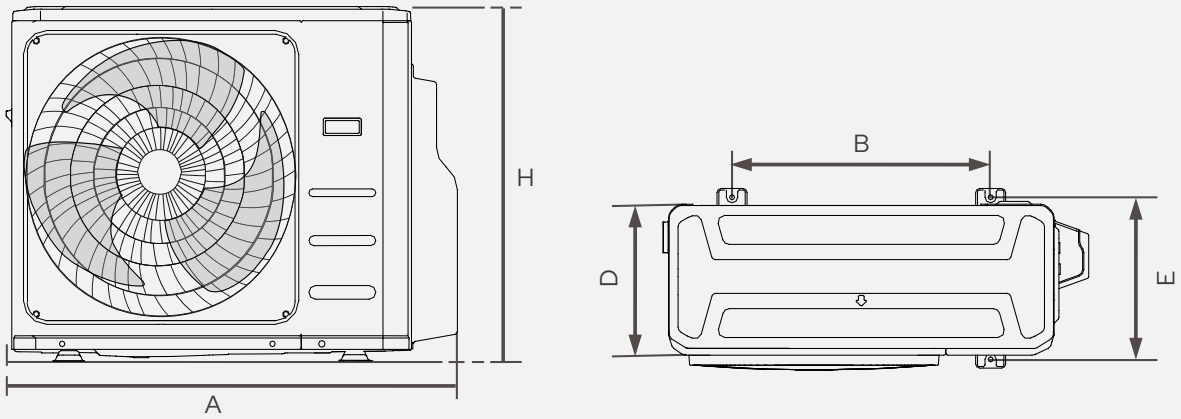


| | UECS26R2 | UECS35R | UECS53R | UECS71R2 | UECS105R-1 | UECS105R | UECS130R2 | UECS176R2 |
|---|---|---|---|---|---|---|---|---|
| A | 835 | 835 | 874 | 955 | 1.030 | 1.030 | 1.073 | 1.073 |
| H | 555 | 555 | 554 | 673 | 810 | 810 | 975 | 975 |
| D | 274 | 274 | 307 | 325 | 410 | 410 | 397 | 397 |
| B | 452 | 452 | 511 | 663 | 673 | 673 | 615 | 615 |
| E | 286 | 286 | 317 | 348 | 403 | 403 | 440 | 440 |
| Kg | 24,6 | 24,6 | 32,5 | 41,9 | 80,5 | 66,9 | 90 | 92 |

Dimensions in mm

# Dimensional Drawings - CCST

MULTISPLIT
COMMERCIAL

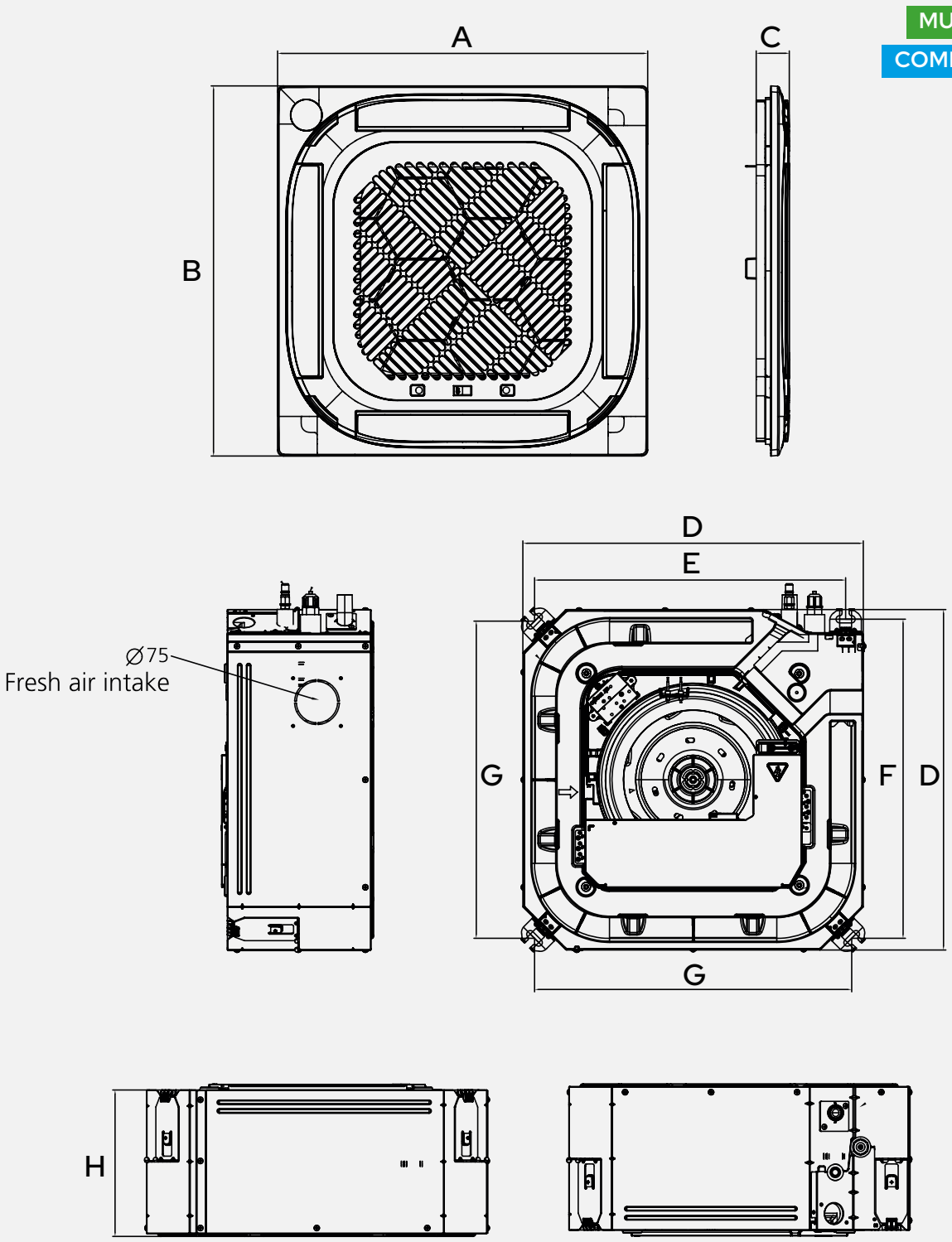


| Model | Nominal dimensions | | | | | | | |
|---|---|---|---|---|---|---|---|---|
| | A | B | C | D | E | F | G | H |
| **26** | 620 | 620 | 50 | 570 | 521 | 534 | 531 | 245 |
| **35** | 620 | 620 | 50 | 570 | 521 | 534 | 531 | 245 |
| **53** | 620 | 620 | 50 | 570 | 521 | 534 | 531 | 245 |
| **71** | 950 | 950 | 75 | 830 | 770 | 670 | 670 | 245 |
| **105** | 950 | 950 | 75 | 830 | 770 | 670 | 670 | 245 |
| **130** | 950 | 950 | 75 | 830 | 770 | 670 | 670 | 287 |
| **176** | 950 | 950 | 75 | 830 | 770 | 670 | 670 | 287 |

Dimensions in mm

# Dimensional Drawings - DUCTR2

MULTISPLIT

COMMERCIAL

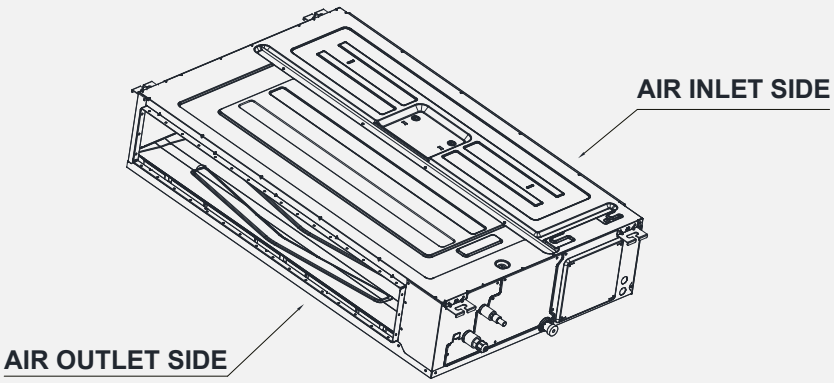


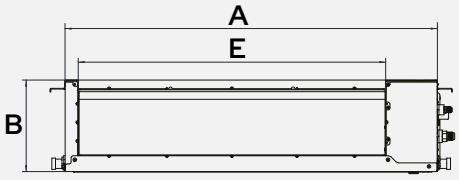


AIR OUTLET SIDE VIEW

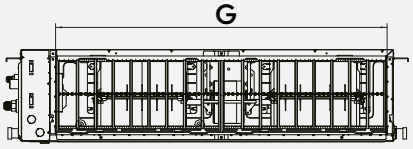


AIR INLET SIDE VIEW

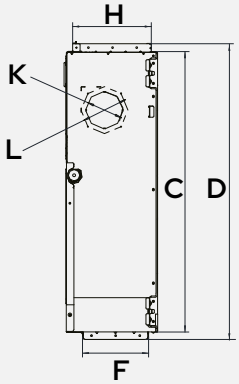


OPPOSITE PIPE SIDE VIEW

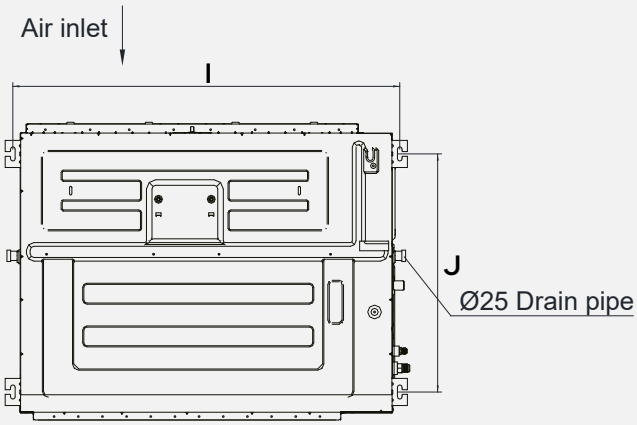


TOP VIEW

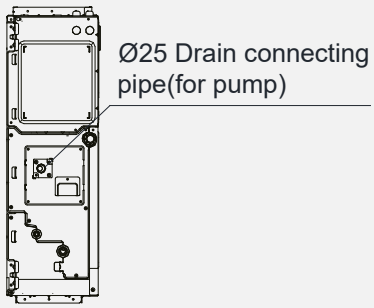


PIPE SIDE VIEW

| Model | Nominal dimensions | | | | Air supply section | | Air intake section | | Mounting hole spacing | | Fresh air intake section | |
|---|---|---|---|---|---|---|---|---|---|---|---|---|
| | A | B | C | D | E | F | G | H | I | J | K | L |
| **20~35** | 700 | 200 | 450 | 506 | 537 | 152 | 599 | 186 | 741 | 360 | 92 | 113 |
| **53** | 700 | 245 | 750 | 795 | 527 | 178 | 592 | 212 | 740 | 640 | 100 | 126 |
| **71** | 1000 | 245 | 750 | 795 | 827 | 178 | 892 | 212 | 1040 | 640 | 100 | 126 |
| **105** | 1200 | 245 | 750 | 795 | 1027 | 178 | 1092 | 212 | 1240 | 640 | 100 | 126 |
| **130** | 1200 | 245 | 750 | 795 | 1027 | 178 | 1092 | 212 | 1240 | 640 | 100 | 126 |
| **176** | 1200 | 300 | 750 | 795 | 1027 | 233 | 1092 | 267 | 1240 | 640 | 125 | 160 |

Dimensions in mm

## Dimensional Drawings - CONS 26, 35, 53

MULTISPLIT

COMMERCIAL

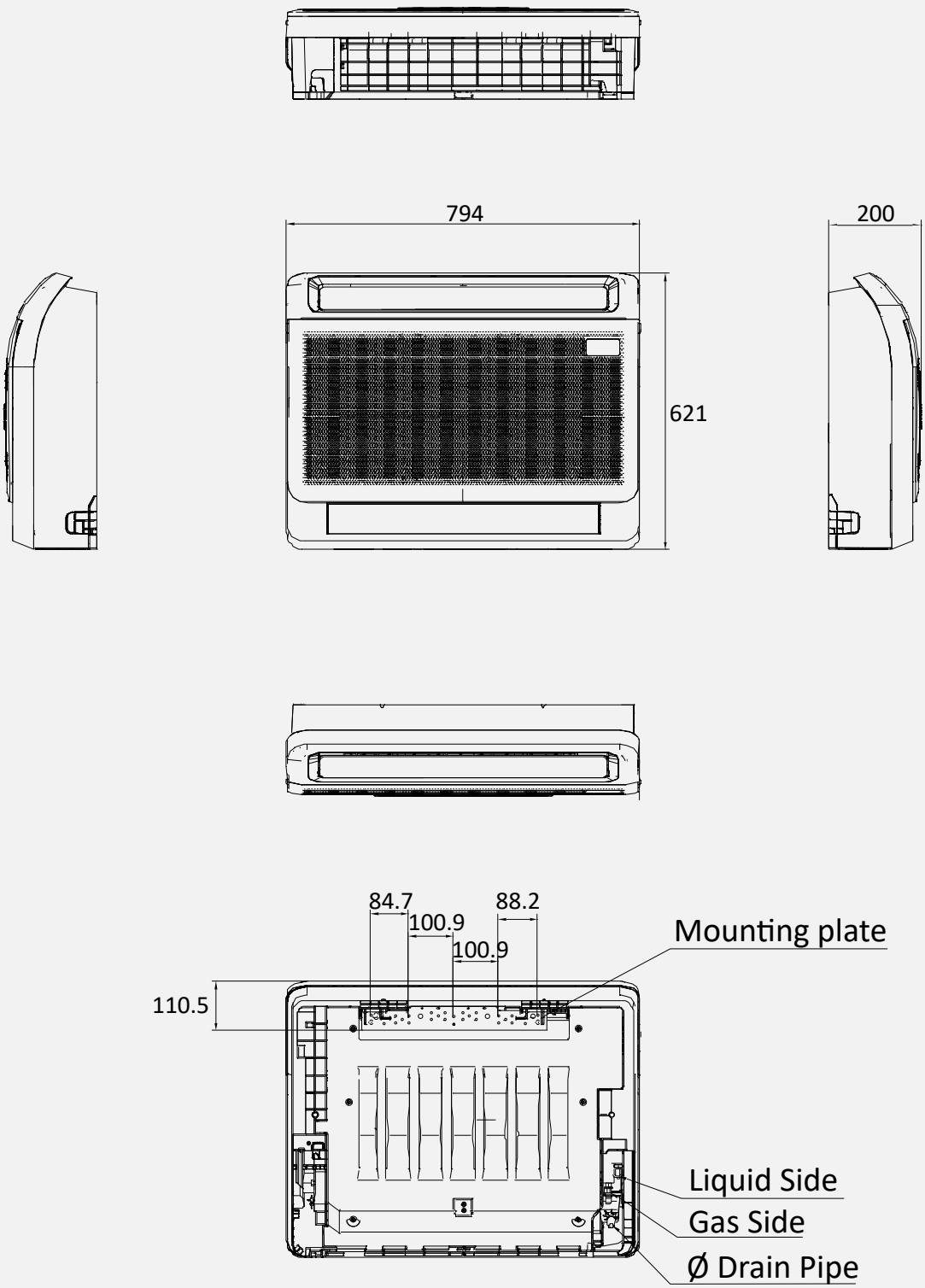

# Dimensional Drawings - SPV

MULTISPLIT
COMMERCIAL

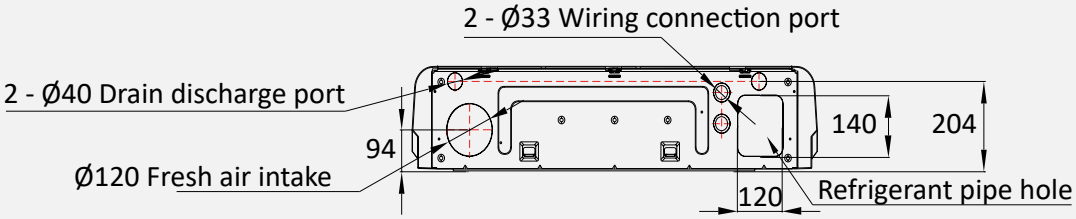


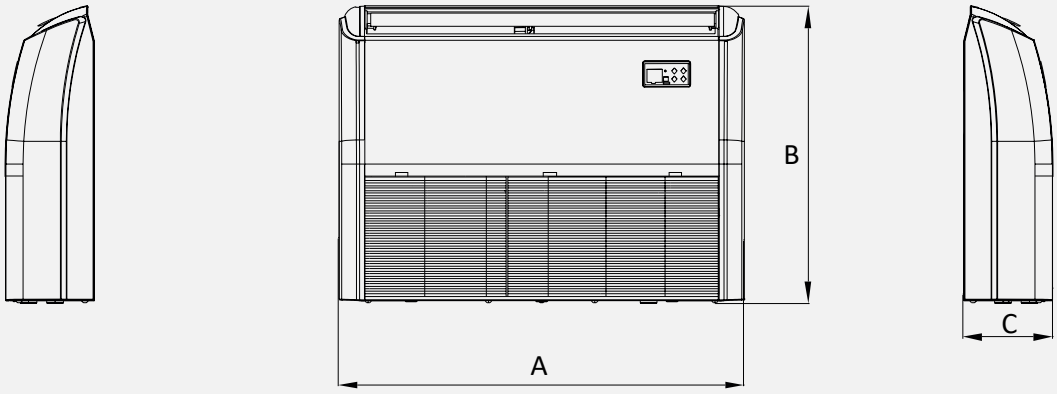

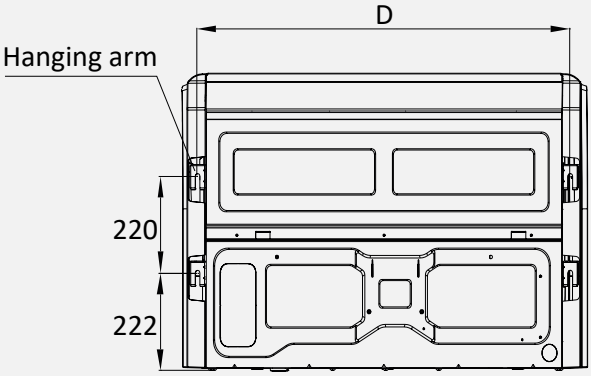


| Model | Nominal dimensions | | | |
|---|---|---|---|---|
| | A | B | C | D |
| **53** | 1.068 | 675 | 235 | 983 |
| **71** | 1.068 | 675 | 235 | 983 |
| **105** | 1.650 | 675 | 235 | 1.565 |
| **176** | 1.650 | 675 | 235 | 1.565 |

Dimensions in mm

# Dimensional Drawings - CLN130R

COMMERCIAL

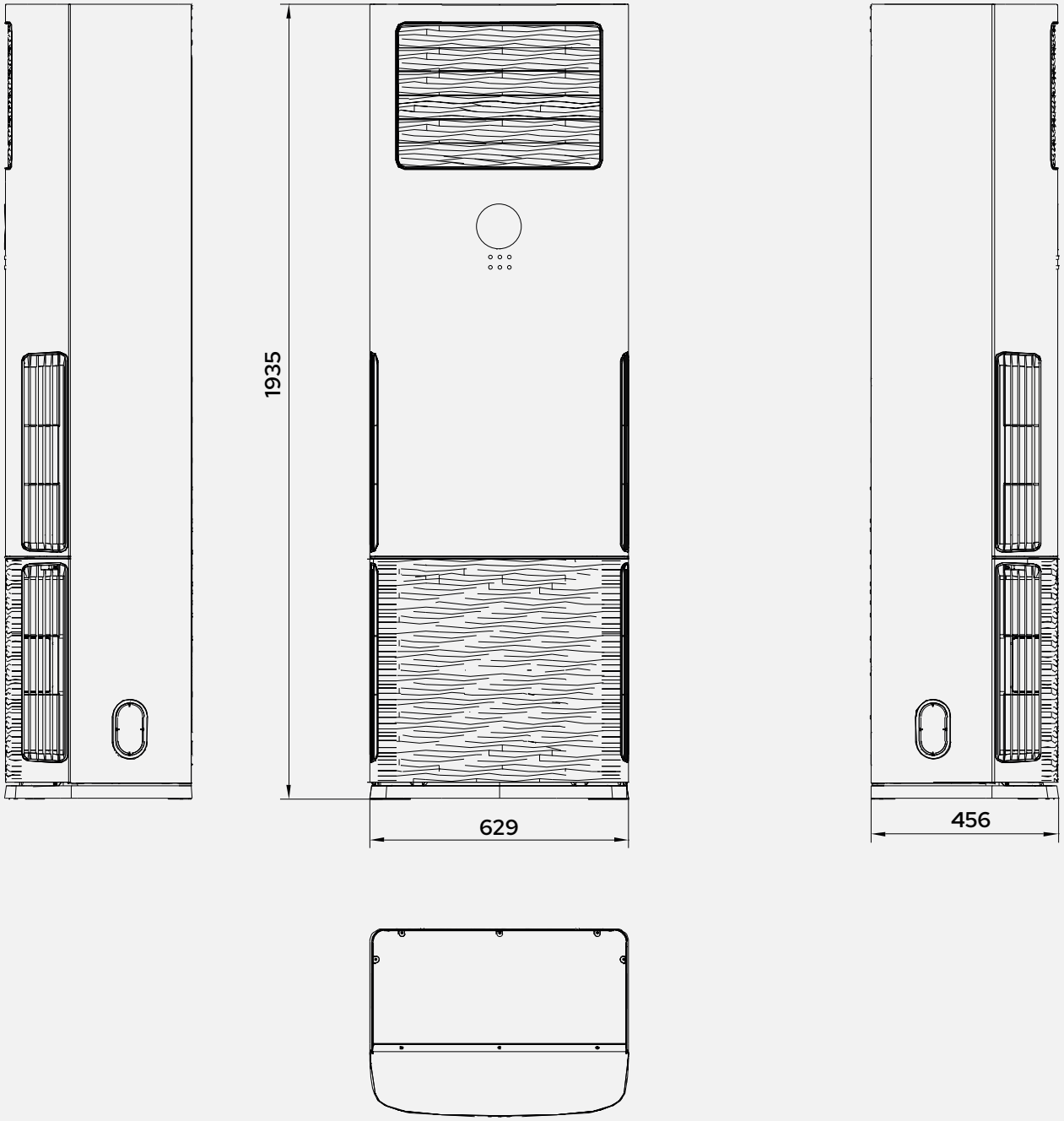

# Accessories

## Controls & accessories for the commercial range

| | | | Code | € |
|---|---|---|---|---|
| | **Smart Kit 2** | Wi-Fi dongle enables management of all main functions via the NetHome Plus app from a smartphone or tablet, compatible with Android and iOS systems. | 0101817#120035 | 95 |
| | **AIRSET-C** | Wi-Fi touch wired controller, for use via the NetHome Plus app, for wall-mounted installation with commercial series units (excluding Floor Standing and Console units). | 011049#0100 | 169 |
| | **Smart Port** | Wi-Fi dongle for R32 commercial series indoor units (CCST, DUCT, SPV). Enables operation via the NetHome Plus app for Android and iOS systems with all basic functions. Temperature control, fan speed adjustment, daily timer and weekly timer management. | 0101819#120035 | 160 |
| | **RFTD-01D** | Fitting to convert CCST, DUCT, SPV into a parallel system (2 indoor units of the same capacity, Master & Slave, plus 1 outdoor unit) | 012109#010076 | 201 |
| | Infrared remote control | | Z400-17317000A60224 | 39 |

## Ductable accessories

### Supply plenum

Complete with oval connections, made of pre-insulated aluminum, with external insulation and elastic sleeve for connection to the fan unit.

| | Model with circular connections | No. of collars and diameter* | Flange dimensions (mm) | Code | € |
|---|---|---|---|---|---|
| | PMC35 DUCT Plenum 20R2 - 26R2 - 35R2 | 2x160 mm | 537 x 152 | 0101717#00200035 | 272 |
| | PMC53R2 Plenum DUCT53R2 | 2x200 mm | 527 x 178 | 0100525#00200053 | 373 |
| | PMC71R2 Plenum DUCT71R2 | 3x160 mm | 827 x 178 | 0100525#00200071 | 378 |
| | PMC105R2 Plenum DUCT105R2 | 3x200 mm | 1027 x 178 | 0100525#00200105 | 562 |
| | PMC130R2 DUCT130R2 plenum | 4x160 mm | 1027 x 178 | 0100525#00200140 | 597 |
| | PMC176R2 Plenum DUCT176R2 | 4x200 mm | 1027 x 233 | 0100525#00200176 | 597 |

* actual diameter or equivalent diameter

### Supply plenum with zone control

Supplied with oval fittings made of pre-insulated aluminium, with external insulation and flexible sleeve for connection to the air handling unit.
Equipped with a practical temperature control kit complete with pre-installed motorized dampers, advanced power module for 2 to 6 zones, 12 V power supply, all factory-wired.
The control system for each zone can be managed by an existing room thermostat or by any thermostat selected from the many available on the market and is compatible with any model. The thermostat, via the connection to the control board, operates the control damper. An automatic bypass compensates the back-pressure generated by the closing of the control dampers.
When no zone is requesting service, the system switches off the air conditioning unit, provided that the relevant NC/NO output has been correctly connected to the ductable indoor unit.
Conversely, as soon as any zone requests service, the system immediately activates the air conditioning unit.

| | Model with circular connections | No. of collars and diameter* | Flange dimensions (mm) | Code | € |
|---|---|---|---|---|---|
| | PMZ35 Plenum for: DUCT 20R2 - 26R2 - 35R1 - 35R2 | 2x160 mm | 537 x 152 | 0101717#00880035 | 1.415 |
| | PMZ53R2 Plenum for DUCT53R2 | 2x200 mm | 527 x 178 | 0100525#00880053 | 1.540 |
| | PMZ71R2 Plenum for DUCT71R2 | 3x160 mm | 827 x 178 | 0100525#00880071 | 1.739 |
| | PMZ105R2 Plenum for DUCT105R2 | 3x200 mm | 1027 x 178 | 0100525#00880105 | 1.961 |
| | PMZ130R2 Plenum for DUCT130R2 | 4x160 mm | 1027 x 178 | 0100525#00880140 | 2.121 |
| | PMZ176R2 Plenum for DUCT176R2 | 4x200 mm | 1027 x 233 | 0100525#00880176 | 2.121 |

* actual diameter or equivalent diameter

### Return grille

PVC profile return grille complete with frame and magnetic filter.

| | Model | Dimensions (mm) | Code | € |
|---|---|---|---|---|
| | GR-1 | 600 x 300 | 0101717#00210001 | 225 |
| | GR-2 | 800 x 300 | 0101717#00210002 | 246 |
| | GR-3 | 800 x 400 | 0101717#00210003 | 309 |

## Conversion to water

The prices indicated below refer exclusively to water conversion.
These prices must be added to the total cost of the unit.

| | Code | Model | Price |
|---|---|---|---|
| Monosplit | 0102624#190026 | OUNVL26R | 5000* |
| | 0102624#190035 | OUNVL35R | 5070* |
| | 0102624#190053 | OUNVL53R | 6.168 |
| | 0102624#190070 | OUNVL70R | 6.683 |
| | 0102624#170026 | LDL26R3 | 5000* |
| | 0102624#170035 | LDL35R3 | 5070* |
| | 0102624#170053 | LDL53R3 | 6.168 |
| | 0102624#170070 | LDL70R3 | 6.683 |
| Multisplit | 0102624#054200 | EXT2M42R | 6.168 |
| | 0102624#055300 | EXT2M53R | 6.168 |
| | 0102624#055301 | EXT3M53R | 6.333 |
| | 0102624#056200 | EXT3M62R | 6.333 |
| | 0102624#050080 | EXT3M80R1 | 6.971 |
| | 0102624#058200 | EXT4M82R | 6.971 |
| | 0102624#051050 | EXT4M105R | 7.505 |
| | 0102624#051200 | EXT5M120R | 7.572 |
| Commerciali | 0102624#180026 | UECS26R2 | 6.037 |
| | 0102624#180035 | UECS35R | 6.037 |
| | 0102624#180053 | UECS53R | 6.168 |
| | 0102624#180071 | UECS71R2 | 6.683 |
| | 0102624#180105 | UECS105R-1 | 7.081 |
| | 0102624#180105 | UECS105R | 7.081 |
| | 0102624#180140 | UECS130R2 | 7.953 |
| | 0102624#180176 | UECS176R2 | 9.296 |

* Unit converted to “REDUCED CASING” = 555x520x296 mm (HxWxD).
For the remaining sizes, the outdoor unit dimensions remain the same as the original.

# Smart WiFi port

## for multi & commercial indoor units

### Simplify climate control!

WiFi module **Smart Port**, specifically designed to control the indoor units of the R32 range – cassette, ducted and floor-ceiling models – via smartphone or tablet.
*(Note: not available for Console and Column models.)*

Thanks to integration with the **NetHome Plus** App, Smart Port offers intuitive and easy remote control via smartphone or tablet.

The compact dimensions make it discreet and easy to integrate. Each Smart Port must be connected to a single indoor unit via serial cable.
Through the app it is possible to manage multiple units.

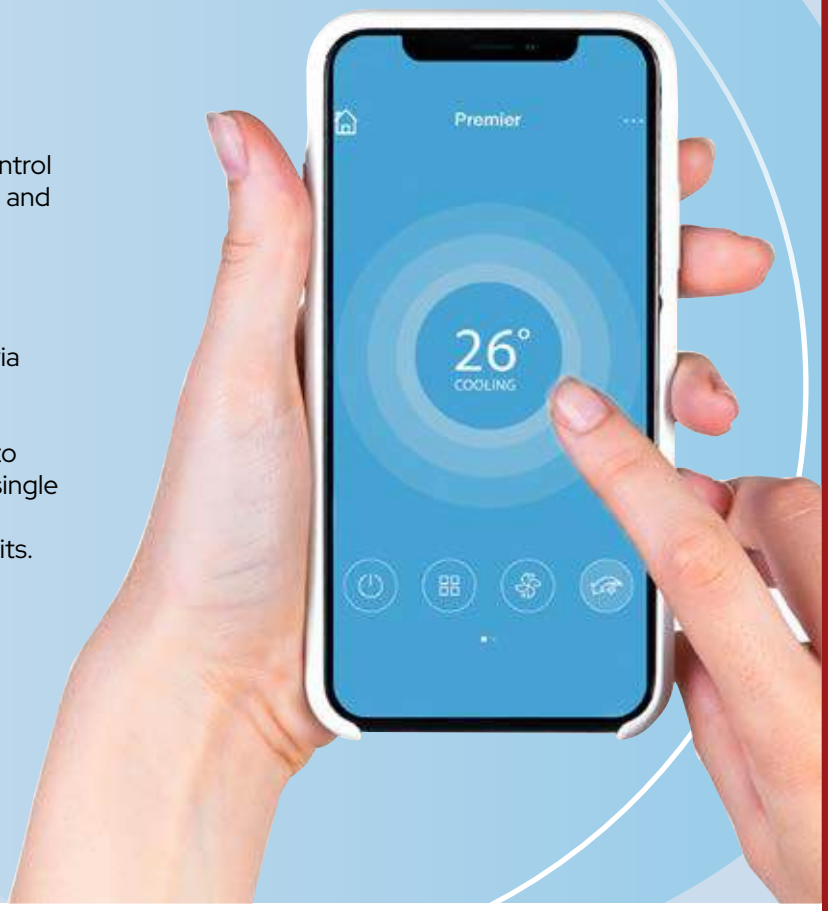


Net Home

Google play

Available on the App Store

Connection to the main board via cable

Remote on/off control

Web and App control

Weekly schedules

Temperature adjustment

Compact dimensions 12 cm x 3 cm

Requirement for a pre-existing support WiFi network

Sleep function

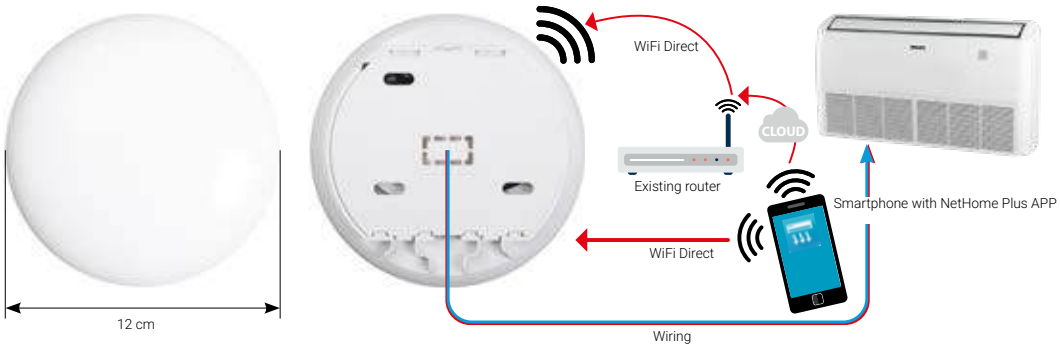

# Single Commercial Parallel System

## Double, Triple, Quadruple

With the *Mono Commercial* series, it is possible to connect a single outdoor unit to two or more indoor units, creating flexible configurations based on the specific requirements of the environment.

Depending on the number and capacity of the indoor units, three types of system can be created:

- **double**
- **triple**
- **quadruple**

In all configurations, the connected indoor units operate synchronously: they share the same temperature set point, the same operating mode and the same fan speed.

It is important to note that all indoor units must be of the same model and capacity, to ensure optimal performance and uniform comfort.

| | CCST R | CCST R1 | SPV R | DUCT R2 |
|---|---|---|---|---|
| **Double** | x | x | x | x |
| **Triple** | | x | | x |
| **Quadruple** | | x | | x |

| Combinations | Cut indoor units | Cut outdoor units |
|---|---|---|
| **Double** | 26 + 26 | UECS53R - UECS71R2 |
| | 35 + 35 | UECS71R2 |
| | 53 + 53 | UECS105R - UECS105R-1 |
| | 71 + 71 | UECS130R2 |
| **Triple** | 26 + 26 + 26 | UECS71R2 - UECS105R - UECS105R-1 |
| | 35 + 35 + 35 | UECS105R - UECS105R-1 |
| | 53 + 53 + 53 | UECS176R2 |
| **Quadruple** | 26 + 26 + 26 + 26 | UECS105R - UECS105R-1 - UECS130R2 |
| | 35 +35 + 35 + 35 | UECS130R2 |

| | | | Size | m | |
|---|---|---|---|---|---|
| **Pipe length** | **Double** | Total pipe length | 26+26 | 30 / 50 | L + L1 + L2 |
| | | | 35+35 | 50 | |
| | | | 53+53 | 75 | |
| | | | 71+71 | 75 | |
| | | Maximum length after the joint | | 15 | L1, L2 |
| | | Maximum length difference | | 10 | L1-L2 |
| | **Triple** | Total pipe length | 26 + 26 + 26 | 50 / 75 | L+L1+L2+L3+La |
| | | | 35 + 35 + 35 | 75 | L+L1+L2+L3+La |
| | | | 53 + 53 + 53 | 75 | L+L1+L2+L3+La |
| | | Maximum length after the first joint | | 15 | L1, L2+La, L3+La |
| | | Maximum length difference | | 10 | L1-(L2+La),L1-(L3+La),L2-L3 |
| | **Quadruple** | Total pipe length | 26 + 26 + 26 + 26 | 75 | L+L1+L2+L3+L4+La+Lb |
| | | | 35 +35 + 35 + 35 | 75 | L+L1+L2+L3+L4+La+Lb |
| | | Maximum length after the first joint | | 15 | L1, L2, L3, L4 |
| | | Maximum length difference | | 10 | L1-L2, L1-L3, L1-L4, L2-L3, L2-L4, L3-L4 |
| **Height difference** | | Height difference between indoor unit and outdoor unit | | 20 | H1 |
| | | Height difference between two indoor units | | 0,5 | H2 |

*Double parallel system*

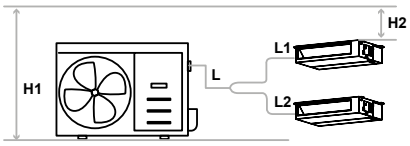


*Triple parallel system*

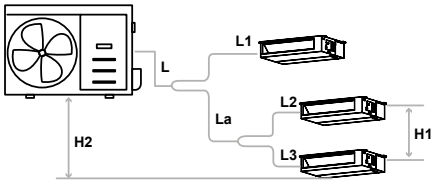


*Four-unit parallel system*

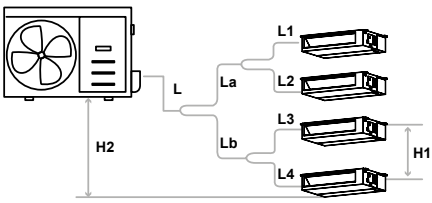

# Convert air-to-air systems to water and save the space of the outdoor unit

**A water-cooled condensing unit can be installed in small spaces inside the building, provided that hydraulic connections are available.**

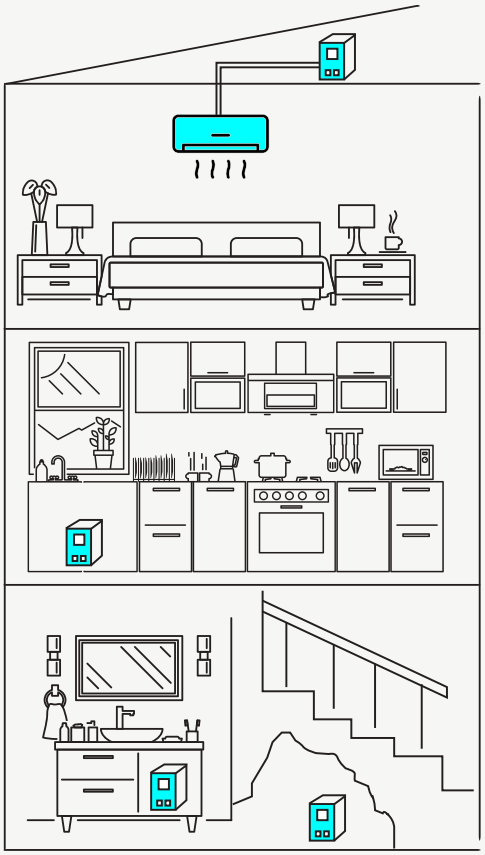

**Why**
The water-cooled condensing unit is useful for overcoming certain installation constraints, particularly in situations where it is not possible to install the outdoor unit due to excessive distance or aesthetic or regulatory restrictions.

**Water-cooled condensing units**
The water-cooled condensing unit requires that the system's original outdoor unit, whether single- or multi-split, be modified as follows:

- removal of the air-side heat exchange coil
- removal of the fan and its related motor
- insertion of suitable elements designed to transfer heat or cold to the water
- replacement of the original housing with a more compact one, suitable for installation even in confined spaces.

**Installation**
The unit is equipped with hydraulic connections (water inlet and outlet), original refrigerant connections, and original electrical connections.

# Wired controller **Airset R&C**

New optional wired controller, supplied as standard on DUCT ductable models. Depending on the version, it can be connected to Tredis indoor units and to indoor units of the commercial series.

**Versions**
**AIRSET-R** can be connected to the indoor unit only by also installing the optional SPC accessory, exclusively for the Tredis range
**AIRSET-C** can be connected directly on the unit

**Main Features**

- Bidirectional communication
- Full control of all functions,
- 4.3" LCD
- Backlighting
- Weekly scheduling
- Autorestart
- Integrated Wi-Fi *(C version only)*
- App ***NetHome Plus*** *(C version only)*

Net Home
Google play
App Store

# Notes

MAXA®
HEATING & COOLING

www.maxa.it

All data and text in this catalogue are the exclusive property of ADVANTIX SPA. ADVANTIX SPA may hold patents or have pending patent applications, trademarks, copyrights, or other intellectual property rights covering specific subjects in this document. The provision of this catalogue does not imply any license to use such patents, trademarks, copyrights, or other intellectual property rights unless such use is permitted under a written license agreement concluded with ADVANTIX SPA. Advantix spa accepts no responsibility for any errors or inaccuracies in the contents of this catalogue and reserves the right to make any changes to its products at any time and without prior notice, whenever deemed appropriate to meet any technical or commercial requirements.